HEADWORKS IMPROVEMENT PROJECT AT THE CITY OF ANN ARBOR WWTP

WASTEWATER TREATMENT SERVICES UNIT

PREPARED BY:

HRC
HUBBELL, ROTH & CLARK, INC
CONSULTING ENGINEERS SINCE 1915

BUHL BLDG, 535 GRISWOLD
SUITE 1650
DETROIT, MI.
48226 - 3698

Hazen

26777 CENTRAL PARK BLVD
SUITE 180
SOUTHFIELD, MI.
48076

STATE OF MICHIGAN
TIMOTHY H. SULLIVAN
ENGINEER
No. 29837
LICENSED PROFESSIONAL ENGINEER

STATE OF MICHIGAN
ANDREW JASON BERNETT
ENGINEER
NO 6201059022
LICENSED PROFESSIONAL ENGINEER

CITY OF ANN ARBOR
FOUNDED 1824
INCORPORATED 1851
MICHIGAN

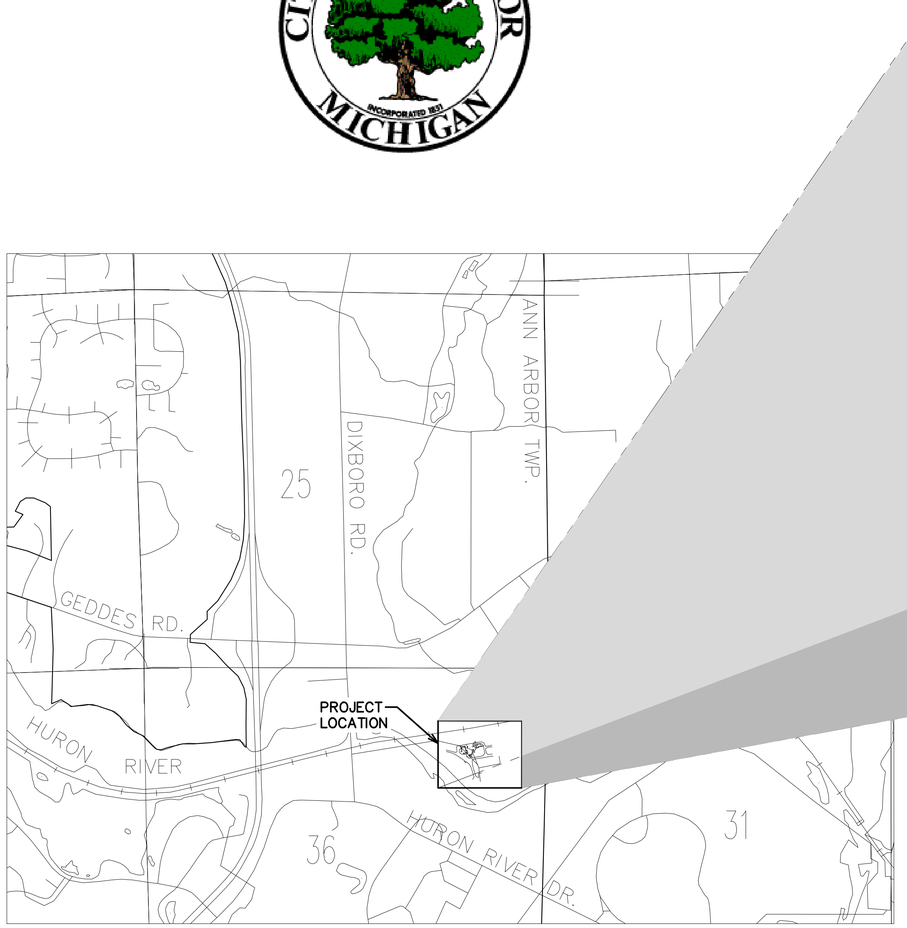

LOCATION MAP
N.T.S.

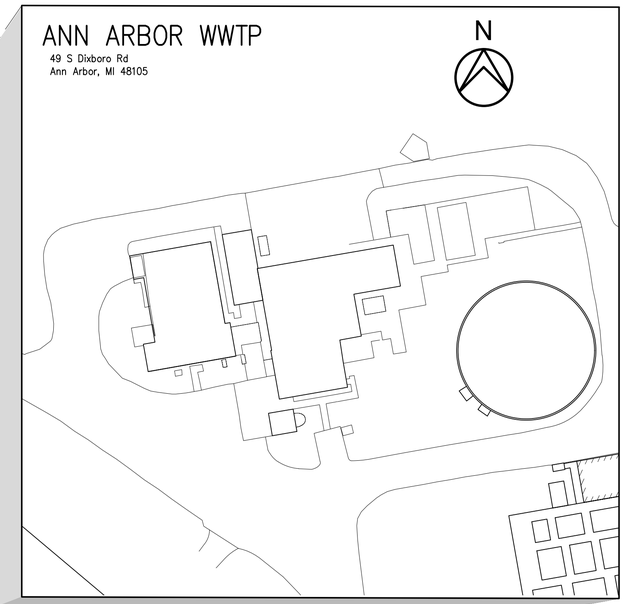

ISSUED FOR ISSUED FOR BIDS SET
DECEMBER 13, 2021
HRC JOB NO. 20190321
ANN ARBOR ITB NO. 4706

MICHIGAN DEPARTMENT OF ENVIRONMENT, THE GREAT LAKES, AND ENERGY

PERMIT NO. _____

DATE _____

SHEET No. 1

001

© 2020 Hubbell, Roth & Clark, Inc. All Rights Reserved

12/14/2021 2:41 PM
C:\Users\mhuda\ACCDocs\Hubbell Roth & Clark Inc\Ann Arbor Headworks Design Project\Project Files\Titleblock_Logos\000_Title_Page.dwg
HRC_OLW.ctb
Huda, Mohammad

LIST OF DRAWINGS

GENERAL

SHEET NO.	DESCRIPTION
COVER	TITLE PAGE
G-01	SHEET INDEX
G-02	AREA DESIGNATIONS, NEMA RATINGS AND MATERIALS

DEMOLITION

SHEET NO.	DESCRIPTION
DG-01	GENERAL DEMOLITION NOTES
DS-01	RAW SEWAGE LIFT STATION DEMOLITION PLAN AND PHOTOS
DS-02	NORTH SCREENING & GRIT DEMOLITION PLAN & SECTIONS
DS-03	NORTH SCREENING & GRIT DEMOLITION PLAN & SECTIONS
DS-04	SOUTH SCREENING & GRIT DEMOLITION PLAN & SECTIONS
DS-05	SOUTH SCREENING & GRIT DEMOLITION PLAN & SECTIONS
DS-06	SCREENING & GRIT DEMOLITION SECTIONS
DS-07	INFLUENT SPLITER DEMOLITION PLAN
DA-01	ARCHITECTURAL DEMOLITION PLAN
DP-01	NORTH SCREENING CHANNEL DEMOLITION PLAN
DP-02	SOUTH SCREENING CHANNEL DEMOLITION PLAN
DP-03	SCREENING CHANNELS DEMOLITION SECTIONS
DP-04	HEADWORKS EXISTING SUMP PUMP DEMOLITION
DP-05	NORTH GRIT CHAMBER DEMOLITION PLAN
DP-06	SOUTH GRIT CHAMBER DEMOLITION PLAN
DP-07	GRIT CHAMBER DEMOLITION SECTIONS
DM-01	HVAC DEMOLITION PLAN
DE-01	NORTH HEADWORKS BUILDING SCREENING AND GRIT EQUIPMENT ELECTRICAL DEMOLITION PLAN
DE-02	SOUTH HEADWORKS BUILDING SCREENING AND GRIT EQUIPMENT ELECTRICAL DEMOLITION PLAN
DE-03	HEADWORKS BUILDING ROOF ELECTRICAL DEMOLITION PLAN
DE-04	HEADWORKS BUILDING ELECTRICAL DEMOLITION PHOTOS

CIVIL

SHEET NO.	DESCRIPTION
C-01	CIVIL LEGEND AND PAVEMENT NOTES
C-02	EXISTING SITE GRADING
C-03	EXISTING SITE UTILITIES
C-04	PROPOSED SITE GRADING
C-05	PROPOSED DETAILED SITE GRADING
C-06	PROPOSED SITE UTILITIES
C-07	SESC PLAN

STRUCTURAL

SHEET NO.	DESCRIPTION
RS-1	REFERENCE PLAN
RS-2	REFERENCE PLAN
RS-3	REFERENCE PLAN
S-1	HEADWORKS BUILDING PLAN
S-2	REPAIR DETAILS
S-3	REPAIR PHOTOS
S-4A	SCREENS PLANS, SECTIONS & DETAILS (DUPERON)
S-4B	SCREENS PLANS, SECTIONS & DETAILS (HYDRO-DYNE)
S-5	NORTH GRIT PLANS & SECTIONS
S-6	NORTH GRIT SECTIONS & DETAILS
S-7	SOUTH GRIT PLANS & SECTIONS
S-8	ODOR CONTROL BUILDING BRACED EXCAVATION PLAN
S-9	ODOR CONTROL BUILDING PLANS
S-10	ODOR CONTROL BUILDING SECTIONS
S-11	ODOR CONTROL BUILDING ROOF PLAN, SECTIONS & DETAILS
S-12	ODOR CONTROL BUILDING SECTIONS, DETAILS & ELEVATIONS
S-13	VESSEL FOUNDATION & PLATFORM PLAN & SECTIONS
S-14	OVERHEAD HOIST DETAILS
S-15	OVERHEAD HOIST DETAILS
S-16	PROJECT NOTES
S-17	MASONRY SPECIFICATION
S-18	CONCRETE SPECIFICATION - 1
S-19	CONCRETE SPECIFICATION - 2
S-20	CONCRETE SPECIFICATION - 3

ARCHITECTURAL

SHEET NO.	DESCRIPTION
A-01	ARCHITECTURAL NOTES AND DETAILS
A-02	ARCHITECTURAL SCHEDULES AND DETAILS
A-03	ODOR CONTROL BUILDING LOWER FLOOR PLAN
A-04	ODOR CONTROL BUILDING MAIN FLOOR PLAN
A-05	ODOR CONTROL BUILDING ROOF PLAN
A-06	ODOR CONTROL BUILDING ELEVATIONS
A-07	ODOR CONTROL BUILDING SECTIONS
A-08	ODOR CONTROL SECTIONS AND DETAILS
A-09	HEADWORKS MODIFICATIONS PLAN AND ELEVATIONS
A-10	HEADWORKS MODIFICATIONS SECTIONS AND DETAILS
A-11	HEADWORKS MODIFICATIONS REFERENCE PHOTOS

PROCESS

SHEET NO.	DESCRIPTION
P-01	PROCESS LEGEND, NOTES AND ABBREVIATIONS
P-02	PROCESS FLOW DIAGRAM - PRIMARY EFFLUENT WATER
P-03	EXISTING AND PROPOSED HYDRAULIC GRADE LINE
P-04	PUMP, VALVE, AND PIPE SCHEDULES
P-05	GATE SCHEDULES
P-06	PROCESS MISCELLANIOUS DETAILS - I
P-07	PROCESS MISCELLANIOUS DETAILS - II
P-08	PROCESS MISCELLANIOUS DETAILS - III
P-09	PROCESS MISCELLANIOUS DETAILS - IV
P-10A	PLAN @ ELEV. 749.0 (DUPERON)
P-11A	PLAN @ ELEV. 743.0 (DUPERON)
P-12A	NORTH SCREENING AREA PARTIAL PLANS (DUPERON)
P-13A	SOUTH SCREENING AREA PARTIAL PLANS (DUPERON)
P-14A	NORTH AND SOUTH CHANNEL SECTIONS (DUPERON)
P-15A	NORTH AND SOUTH SCREENING SECTIONS (DUPERON)
P-10B	PLAN @ ELEV. 749.0 (HYDRO-DYNE)
P-11B	PLAN @ ELEV. 743.0 (HYDRO-DYNE)
P-12B	NORTH SCREENING AREA PARTIAL PLANS (HYDRO-DYNE)
P-13B	SOUTH SCREENING AREA PARTIAL PLANS (HYDRO-DYNE)
P-14B	NORTH AND SOUTH CHANNEL SECTIONS (HYDRO-DYNE)
P-15B	NORTH AND SOUTH SCREENING SECTIONS (HYDRO-DYNE)
P-16	EMERGENCY BYPASS CHANNEL SECTION
P-17	PARTIAL PLAN OF GRIT CHAMBERS AT ELEV. 742.0
P-18	GRIT CHAMBER SECTION 1
P-19	GRIT CHAMBER SECTION 2
P-20	PLAN OF ODOR CONTROL AND GRIT PUMP BUILDING
P-21	SOUTH GRIT CHAMBER SECTION
P-22	PARTIAL PLAN OF GRIT WASHERS
P-23	DUMPSTER ROOM SECTION
P-24	GRIT WASHERS SECTION

MECHANICAL

SHEET NO.	DESCRIPTION
M-01	HVAC LEGEND, NOTES AND ABBREVIATIONS
M-02	HVAC SCHEDULES
M-03	HVAC AIRFLOW DIAGRAM
M-04	HVAC MISCELLANEOUS DETAILS - I
M-05	PLAN OF ODOR CONTROL OVERALL
M-06	LIFT STATION PLAN AT EL 732.0
M-07	HVAC MISC PLANS AT EL 732.0
M-08	ODOR CONTROL ROOF PLAN
M-09	ODOR CONTROL ROOM ELEVATIONS

ELECTRICAL

SHEET NO.	DESCRIPTION
E-01	ELECTRICAL ONE-LINE DIAGRAMS
E-02	ELECTRICAL SCHEDULES
E-03A	NORTH HEADWORKS BUILDING DUPERON POWER PLAN
E-04A	SOUTH HEADWORKS BUILDING DUPERON POWER PLAN
E-03B	NORTH HEADWORKS BUILDING HYDRO-DYNE POWER PLAN
E-04B	SOUTH HEADWORKS BUILDING HYDRO-DYNE POWER PLAN
E-05	NORTH HEADWORKS BUILDING GRIT WOLF & PUMP POWER PLAN
E-06	NORTH HEADWORKS BUILDING COANDA POWER PLAN
E-07	ODOR CONTROL BUILDING POWER PLAN
E-08	ODOR CONTROL BUILDING LIGHTING PLAN
E-09	ODOR CONTROL BUILDING GROUNDING PLAN
E-10	NORTH HEADWORKS BUILDING LIGHTING PLAN
E-11	HEADWORKS BUILDING ROOF POWER PLAN
E-12	ELECTRCAL DETAILS

INSTRUMENTATION AND CONTROLS

SHEET NO.	DESCRIPTION
I-01	LEGEND AND ABBREVIATIONS
I-02	CONTROL SYSTEM ARCHITECTURE
I-03A	NORTH SCREENINGS-OPTION A
I-03B	NORTH SCREENINGS-OPTION B
I-04A	SOUTH SCREENINGS-OPTION A
I-04B	SOUTH SCREENINGS-OPTION B
I-05	NORTH GRIT COLLECTOR
I-06	SOUTH GRIT COLLECTOR
I-07	NORTH GRIT WASHER
I-08	SOUTH GRIT WASHER
I-09	ODOR CONTROL SYSTEM
I-10	ODOR CONTROL SYSTEM GAS MONITORING
I-11	STANDARD DETAILS

811 Know what's below. Call before you dig.

REV.	DESCRIPTION	DATE	DRAWN	CHECKED
	ISSUED FOR BIDS SET	12-13-2021		
	90% DESIGN SUBMITTAL	11-22-2021		
	70% DESIGN SUBMITTAL	10-29-2021		
	50% DESIGN SUBMITTAL	10-01-2021		

CITY OF ANN ARBOR
PUBLIC SERVICES
301 EAST HURON STREET
P.O. BOX 8647
ANN ARBOR, MI 48107-8647
734.794.6410
www.a2gov.org

PROJECT MANAGEMENT - PUBLIC SERVICES - CITY OF ANN ARBOR

HEADWORKS IMPROVEMENTS PROJECT

SHEET INDEX

SCALE N.T.S.

DRAWING No. 001

SHEET No. G-01

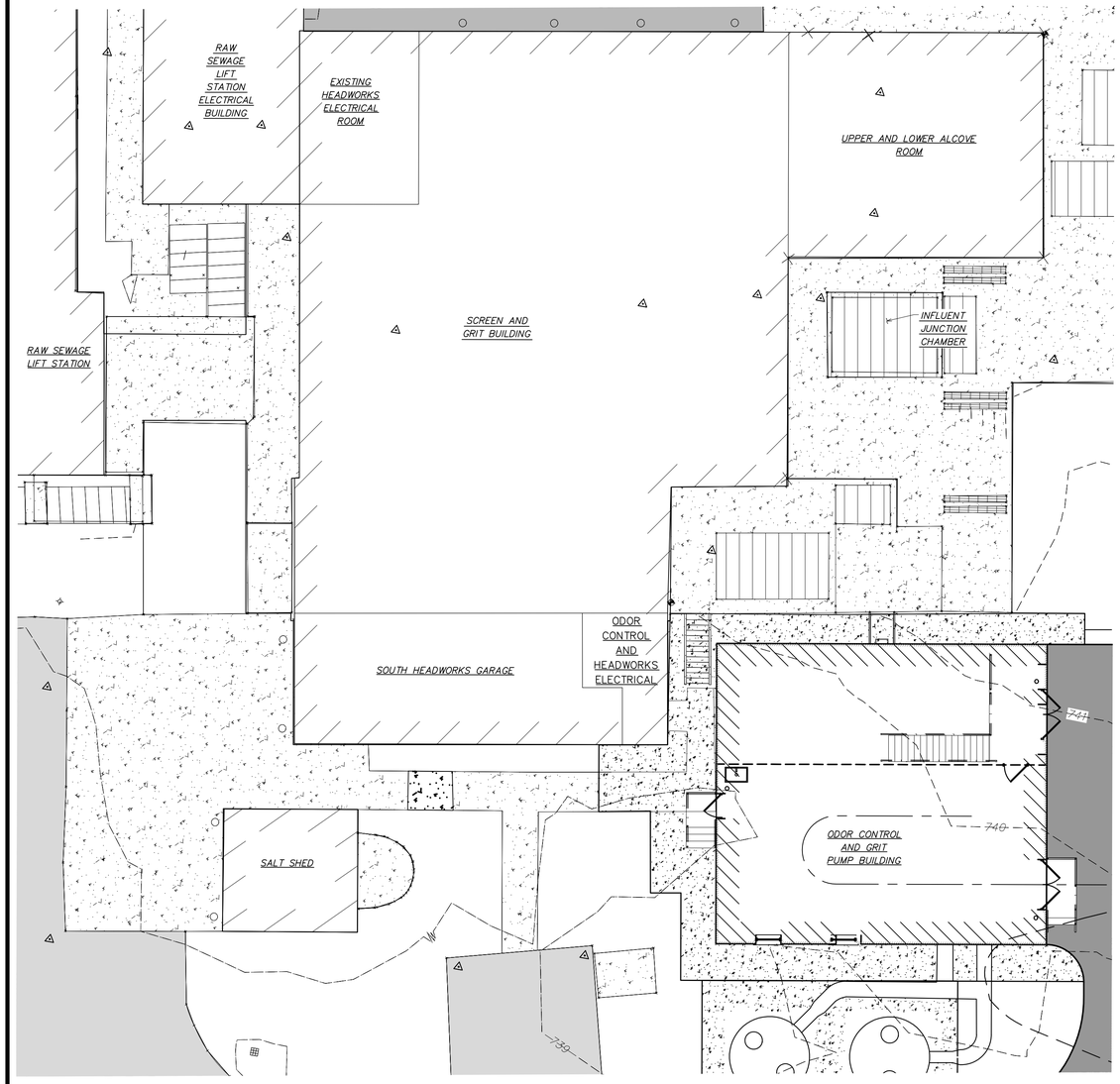

ATMOSPHERIC AND NEMA DESGINATIONS
SCALE: 1" =10'

N

	BUILDING	ROOM / FLOOR		ATMOSPHERIC DESIGNATION	MATERIALS (1)	PAINT SYSTEM (2)	NFPA CLASSIFICATION	NEMA RATING	CONDUIT (3)
	DESCRIPTION	ID	DESCRIPTION						
GENERAL AREAS:									
	OUTSIDE			MODERATELY CORROSIVE	GALVANIZED	N/A	UNCLASSIFIED	NEMA 4X	PVC CTD RGS
	TANKS (INSIDE)		INCLUDING 18" ABOVE TANK DECK	HIGHLY CORROSIVE	316(L) SS	N/A	CLASS 1 / DIV. 1	NEMA 7	PVC CTD RGS
	TANKS (DECKS)		EXCLUDING 18" ABOVE TANK DECK	MODERATELY CORROSIVE	GALVANIZED	N/A	UNCLASSIFIED	NEMA 4X	PVC CTD RGS
	OUTSIDE NEAR ACCESS (4)			HIGHLY CORROSIVE	316(L) SS	N/A	CLASS 1 / DIV. 3	NEMA 4X	PVC CTD RGS
	ELECTRICAL ROOMS			NEUTRAL	CARBON STEEL		UNCLASSIFIED	NEMA 12	RGS
	SERVICE BUILDINGS / GARAGE			NEUTRAL	CARBON STEEL		UNCLASSIFIED	NEMA 12	RGS
	ROOFS				SEE ARCH.			NEMA 4X	RGS
	HEADWORKS		SCREEN AND GRIT ROOM	HIGHLY CORROSIVE	316(L) SS	N/A	CLASS 1 / DIV. 1	NEMA 7	PVC CTD RGS
			NORTH GARAGE	HIGHLY CORROSIVE	316(L) SS	N/A	CLASS 1 / DIV. 1	NEMA 7	PVC CTD RGS
			SOUTH GARAGE	HIGHLY CORROSIVE	316(L) SS	N/A	CLASS 1 / DIV. 1	NEMA 7	PVC CTD RGS
			ELECTRICAL ROOM	NEUTRAL	CARBON STEEL		UNCLASSIFIED	NEMA 12	RGS
			ALCOVE , LOWER ALCOVE & NORTH GRIT DRY PIT	HIGHLY CORROSIVE	316(L) SS	N/A	CLASS 1 / DIV. 1	NEMA 7	PVC CTD RGS
	ODOR CONTROL AND GRIT PUMP BUILDING								
			GRIT PUMP ROOM	MODERATELY CORROSIVE	GALVANIZED	N/A	UNCLASSIFIED	NEMA 4X	RGS
			ODOR CONTROL ROOM	MODERATELY CORROSIVE	GALVANIZED	N/A	UNCLASSIFIED	NEMA 4X	RGS
NOTES:									
1	MINIMUM STANDARDS THAT APPLY TO SUPPORTS, HARDWARE, UNISTRUT, ETC. DOES NOT APPLY TO PIPE OR EQUIPMENT. WHERE MORE STRINGENT STANDARDS ARE IDENTIFIED ELSEWHERE, THOSE STANDARDS APPLY								
2	SEE 09900								
3	CONDUIT:								
	RGS - RIGID GALVANIZED STEEL								
	PVC CTD RGS - PVC COATED RIGID STEEL								
	EMT - ELECTRICAL METAL TUBING								
4	WITHIN 10 FT OF OPEN TANK, PROCESS VENT, ACCESS HATCH OR TANK OPENING. (e.g. ELECTRICAL PANELS OR DISCONNECTS AND ALL SUPPORTS AND HARDWARE WITHIN 10 FT OF AN ACCESS HATCH SHALL BE 316SS.)								

NOTE ✱ :
COORDINATE DIMENSIONS WITH MANUFACTURER'S APPROVED SHOP DRAWINGS.

NOTES:
1 MINIMUM STANDARDS THAT APPLY TO SUPPORTS, HARDWARE, UNISTRUT, ETC. DOES NOT APPLY TO PIPE OR EQUIPMENT. WHERE MORE STRINGENT STANDARDS ARE IDENTIFIED ELSEWHERE, THOSE STANDARDS APPLY
2 SEE 09900
3 CONDUIT:
RGS - RIGID GALVANIZED STEEL
PVC CTD RGS - PVC COATED RIGID STEEL
EMT - ELECTRICAL METAL TUBING
4 WITHIN 10 FT OF OPEN TANK, PROCESS VENT, ACCESS HATCH OR TANK OPENING. (e.g. ELECTRICAL PANELS OR DISCONNECTS AND ALL SUPPORTS AND HARDWARE WITHIN 10 FT OF AN ACCESS HATCH SHALL BE 316SS.)

811 Know what's below. Call before you dig.

REV.	DESCRIPTION	DATE	DRAWN	CHECKED
	ISSUED FOR BIDS SET	12–13–2021		
	90% DESIGN SUBMITTAL	11–22–2021		
	70% DESIGN SUBMITTAL	10–29–2021		
	50% DESIGN SUBMITTAL	10–01–2021		

CITY OF ANN ARBOR
PUBLIC SERVICES
301 EAST HURON STREET
P.O. BOX 8647
ANN ARBOR, MI 48107-8647
(734) 794-6410
www.a2gov.org

PROJECT MANAGEMENT - PUBLIC SERVICES - CITY OF ANN ARBOR

HEADWORKS IMPROVEMENTS PROJECT
ATMOSPHERIC AND NEMA DESIGNATIONS

SCALE 1"=10'
DRAWING No. 002

SHEET No.
G–02

GENERAL DEMOLITION NOTES

G-1. DEMOLITION DRAWINGS PROVIDE SPECIFIC INSTRUCTIONS TOWARDS THE SELECTIVE AND WHOLESALE DEMOLITION WORK. THEY ARE TO BE USED IN CONJUNCTION WITH SPECIFICATION SECTIONS 02050-DEMOLITION AND 01950-SEQUENCE OF CONSTRUCTION. THE CONTRACTOR IS REQUIRED TO PLAN AND COORDINATE THE WORK RELATIVE TO THESE SPECIFICATIONS AND THE NOTES PROVIDED HEREIN. THE CONTRACTOR IS ALSO REQUIRED TO PLAN AND HOLD ON-SITE PRE-DEMOLITION MEETING AS SPECIFIED.

G-2. THESE DRAWINGS, AS NOTED IN THE ORIGINAL TITLE BLOCKS, ARE FROM THE FOLLOWING PROJECTS:

1977 -WASTEWATER TREATMENT PLANT IMPROVEMENTS CONTRACT
77-S-6 VOLUME I & II (MCNAMEE, PORTER AND SEELEY).....DATUM - NGVD 1929

1989 -WASTEWATER TREATMENT PLANT IMPROVEMENTS CONTRACT
89-S-1 DIVISION A (MCNAMEE, PORTER AND SEELEY).....DATUM - NGVD 1929

2000 -WASTEWATER TREATMENT PLANT MINOR RESIDUALS
IMPROVEMENTS (BLACK & VEATCH).....DATUM - NGVD 1929

2012 -WASTEWATER TREATMENT PLANT FACILITY RENOVATIONS (MALCOM PIRNIE).....DATUM - N/A

2017- WASTEWATER TREATMENT PLANT FACILITY RENOVATIONS (ARCADIS).....DATUM - NAVD 88

G-3. THE CONTRACTOR WILL NOTE THAT THESE DRAWINGS DO NOT NECESSARILY REFLECT THE EXISTING CONDITIONS AND THAT SOME OF THE OLDER WORK HAS BEEN MODIFIED BY MORE RECENT PROJECTS OR OWNER MODIFICATIONS. HRC HAS ATTEMPTED TO NOTE ON THESE DRAWINGS WHERE CHANGES HAVE BEEN MADE. NOT ALL CHANGES HAVE BEEN NOTED. IT IS THE CONTRACTOR'S

RESPONSIBILITY TO FIELD ASSESS ALL OF THE EXISTING CONDITIONS PRIOR TO PURCHASING EQUIPMENT AND MATERIAL TO VERIFY ACTUAL CONDITIONS. CONTRACTOR SHALL NOTIFY ENGINEER OF INCONSISTENCIES BEFORE PROCEEDING.

G-4. THE CONTRACTOR SHALL PROMPTLY REMOVE AND DISPOSE OF ALL MATERIAL AND EQUIPMENT OFF SITE, IN A LEGAL MANNER. THESE NOTES APPLY TO ALL DEMOLITION SHEETS. ADDITIONAL NOTES ARE INCLUDED ON OTHER SHEETS AS WELL. ALL DEMO NOTES ON THESE DEMOLITION SHEETS ARE CONTAINED IN A BOX. ANY NOTES NOT CONTAINED IN A BOX, OR BOLD ITEMS, ARE PART OF THAT ORIGINAL SHEET.

SCOPE OF WORK:

G-5. DEMOLITION WORK INCLUDES BUT IS NOT LIMITED TO THE FOLLOWING (SEE SPECIFICATION 02050 - SELECTIVE DEMOLITION WORK FOR MORE INFORMATION):

a. AUDIO / VISUAL RECORDING OF THE FACILITY PRIOR TO ANY WORK.
b. PRE-DEMOLITION MEETINGS
c. SCREENING EQUIPMENT DEMOLITION INCLUDES REMOVAL OF MECHANICAL SCREENS, WASHER COMPACTOR EQUIPMENT, SCREW CONVEYORS, SUPPORTS, SELECT GRATING, SELECT CONCRETE, ANCHORS, HARDWARE, SELECT PIPING AND VALVES, MOTORS, ELECTRICAL AND CONTROL EQUIPMENT, CONDUIT AN CABLE, ETC. WITHIN THE HEADWORKS FACILITY, NORTH GARAGE, AND SOUTH GARAGE AS REQUIRED TO FACILITATE PLACEMENT OF NEW EQUIPMENT AS SEEN IN THE PROCESS DRAWINGS.
d. GRIT EQUIPMENT DEMOLITION INCLUDES REMOVAL OF EXISTING GRIT PUMPS, GRIT SEPARATORS, WASHER COMPACTOR EQUIPMENT, EQUIPMENT SUPPORTS, ANCILLARY PIPING AND VALVES, EQUIPMENT ANCHORS, SELECT CONCRETE, AND ELECTRICAL AND CONTROL EQUIPMENT, CONDUIT AND CABLES WITHIN THE HEADWORKS FACILITY, NORTH GARAGE, ALCOVE AREA, AND HEADWORKS EFFLUENT CHANNELS AS REQUIRED TO FACILITATE PLACEMENT OF NEW EQUIPMENT AS SEEN IN THE PROCESS DRAWINGS.
e. ODOR CONTROL DEMOLITION INCLUDES DEMOLITION OF SELECT GRATING AT THE INFLUENT PUMP STATION, HEADWORKS INFLUENT CHANNEL, HEADWORKS EFFLUENT CHANNEL, AND INFLUENT FLOW SPLITTER.
f. HVAC DEMOLITION INCLUDES THE DEMOLITION OF EXISTING HVAC UNITS AND EXHAUST FANS ON THE ROOF OF THE EXISTING HEADWORKS FACILITY.
g. REFER TO SPECIFICATION 02050 TO DETERMINE ALL EQUIPMENT THAT IS TO BE SALVAGED AND TURNED OVER TO THE OWNER.

G-6. INCIDENTAL WORK - WORK INCIDENTAL TO DEMOLITION INCLUDES THE FOLLOWING:

a. WORKER AND OWNER'S STAFF PROTECTION MEASURES
b. COORDINATION OF ALL DEMOLITION ACTIVITIES.
c. ISOLATION OF UTILITIES.
d. PERMITS.
e. SALVAGE, RE-USE AND DISPOSAL
f. REMOVAL OF ANCHORS, REINFORCING, SUPPORTS, ETC., SURFACE PATCHING, AND PAINTING.
g. HOUSEKEEPING MEASURES:
i. DUST CONTROL AND SLURRY CONTAINMENT
ii. CLEAN UP OF DEBRIS FROM THE FLOORS DAILY.
h. SITE RESTORATION

PROJECT CONDITIONS

G-7. MUCH OF THE DEMOLITION WORK IS SELECTIVE DEMOLITION, ALLOWING THE DEMOLITION OF SOME EQUIPMENT AND UTILITIES WHILE REQUIRING OTHER EQUIPMENT AND UTILITIES TO REMAIN IN SERVICE. ALL UTILITIES - POTABLE WATER, PEW, NATURAL GAS, ELECTRIC POWER AND CONTROLS, DRAINS, ETC. - MUST REMAIN IN SERVICE FOR OPERATIONAL EQUIPMENT. THE CONTRACTOR MUST PLAN THE DEMOLITION ACTIVITIES IN CLOSE COORDINATION WITH THE OWNER AND SEQUENCE OF CONSTRUCTION.

G-8. THE CONTRACTOR SHALL VISIT THE JOB SITE AND THOROUGHLY VERIFY THE EXISTING FIELD CONDITIONS AND SEQUENCING REQUIREMENTS PRIOR TO SUBMITTING A BID.

G-9. SITE AND WORKER PROTECTION

a. THE CONTRACTOR SHALL ERECT AND MAINTAIN BARRIERS, LIGHTS AND OTHER PROTECTIVE DEVICES TO PREVENT ACCESS TO AREAS UNDER DEMOLITION OR WITHIN THE INFLUENCE OF THE ONGOING WORK.
b. THE CONTRACTOR SHALL PROTECT ALL UTILITIES, EQUIPMENT, H&V EQUIPMENT AND DUCTWORK, LIGHTING, INFRASTRUCTURE, ETC., DURING THE PROGRESSION OF THE WORK. DAMAGE TO THE FACILITY SHALL BE REPLACED TO PRIOR CONDITIONS AT THE CONTRACTOR'S EXPENSE.
c. THE CONTRACTOR SHALL PROMPTLY REPAIR DAMAGE CAUSED TO ADJACENT FACILITIES BY DEMOLITION OPERATION WHEN DIRECTED BY THE ENGINEER AT NO COST TO THE OWNER. REPAIRS SHALL BE MADE TO A CONDITION AT LEAST EQUAL TO THAT WHICH EXISTED PRIOR TO CONSTRUCTION.

G-10. ACCESS TO THE SITE

a. THE CONTRACTOR SHALL PROVIDE FREE AND SAFE PERSONNEL AND VEHICULAR PASSAGE TO AND FROM ADJACENT STRUCTURES WHICH ARE BEING USED BY THE OWNER FOR ONGOING OPERATIONS OF THE TREATMENT PLANT.
b. SCREENINGS AND GRIT ACCESS AND TRUCK TRAFFIC MUST BE MAINTAINED AT ALL TIMES. ALL STAGED EQUIPMENT MUST NOT HINDER THE FLOW OF ANY ON-SITE TRAFFIC INCLUDING BUT NOT LIMITED TO SLUDGE HAULERS.
c. PROVIDE TEMPORARY ROAD PLATE TO PROTECT ROADWAYS OR TO ALLOW VEHICULAR TRAFFIC WHEN NECESSARY.
d. THE CONTRACTOR SHALL PROTECT ELECTRICAL PANELS FROM DUST OR OTHER DELETERIOUS EFFECTS OF DEMOLITION.

G-11. ENVIRONMENTAL CONCERNS

a. THE CONTRACTOR SHALL ASSUME ALL PAINT IS LEAD-BASED. ANY PAINT REMOVAL SHALL BE DONE IN ACCORDANCE WITH ALL APPLICABLE OSHA STANDARDS TO ENSURE THAT WORKERS ARE NOT EXPOSED ABOVE THE PERMISSIBLE EXPOSURE LIMITS (PEL).
b. ASBESTOS CONTAINING MATERIAL SAMPLING DATA ARE PRESENTED IN APPENDIX C. THE BLACK ASPHALT UNDERLAY ON THE ROOF OF THE INCINERATOR BUILDING IS ASBESTOS CONTAINING MATERIAL. BECAUSE THE MATERIAL IS NON-FRIABLE AND EXPECTED TO REMAIN NON-FRIABLE IT CAN BE REMOVED AND DISPOSED OF AS GENERAL CONSTRUCTION DEBRIS.
c. THE CONTRACTOR SHALL USE EQUIPMENT OR TOOLS WHICH DO NOT EXCEED 85 DBA WHEN OWNER STAFF ARE PRESENT OPERATING/MAINTAINING DWTF EQUIPMENT. THE CONTRACTOR MAY BE REQUIRED TO LIMIT NOISE TO 75 DBA IF PROLONGED MAINTENANCE IS REQUIRED IN THE BUILDING.
d. THE CONTRACTOR SHALL MINIMIZE PRODUCTION OF DUST DUE TO DEMOLITION OPERATIONS, DO NOT USE WATER IF THAT WILL RESULT IN ICE, FLOODING, SEDIMENTATION OF PUBLIC WATERWAYS OR STORM SEWERS, OR OTHER POLLUTION.

G-12. THE OWNER ASSUMES NO RESPONSIBILITY FOR THE ACTUAL CONDITION OF THE STRUCTURES/EQUIPMENT TO BE DEMOLISHED OR ISOLATED. VALVES OR GATES MAY NOT OPERATE OR SEAL PROPERLY. SEALING OF VALVES OR GATES MUST BE TESTED BY THE CONTRACTOR PRIOR TO CONSTRUCTION AND BE REHABILITATED IN THE EVENT A SEAL DOES NOT OCCUR.

G-13. POWER AND/OR CONTROL WIRING MAY NOT BE AS NOTED ON THE DEMOLITION DRAWING, OR OTHER RECORD OR AS-BUILT DRAWING INFORMATION MAY NOT BE CORRECT. CONDITIONS EXISTING AT THE TIME OF INSPECTION FOR BIDDING PURPOSES WILL BE MAINTAINED BY THE OWNER INSOFAR AS PRACTICABLE. HOWEVER, VARIATIONS WITHIN A STRUCTURE MAY OCCUR PRIOR TO THE START OF DEMOLITION WORK. REASONABLE USE OF ELECTRIC POWER AND PLANT EFFLUENT WATER (PEW) IS ACCEPTABLE.

CONTRACTOR'S COORDINATION AND SUPERVISION

G-14. THE CONTRACTOR SHALL BE RESPONSIBLE FOR ALL DEMOLITION WORK, INCLUDING COORDINATION AND SUPERVISION OF ALL ACTIVITIES BETWEEN THE TRADES.

G-15. ON-SITE PRE-DEMOLITION MEETINGS WILL TAKE PLACE PRIOR TO AREA DEMOLITION ACTIVITIES. AREAS REQUIRING PRE-DEMOLITION MEETINGS INCLUDE

a. SOUTH SCREENINGS EQUIPMENT,
b. NORTH SCREENINGS EQUIPMENT,
c. NORTH GRIT EQUIPMENT AND
d. SOUTH GRIT EQUIPMENT.

ALL DEMOLITION TRADES MUST PARTICIPATE IN THE MEETING. THE DETAILED DEMOLITION PLAN WILL BE USED AS THE AGENDA FOR THIS MEETING AND A WALK-THROUGH FOLLOWING THE MEETING WILL ALSO TAKE PLACE.

G-16. CONTRACTOR'S RESPONSIBILITY SHALL INCLUDE A COMPLETELY EQUIPPED FIRST AID KIT, PROVIDED AND MAINTAINED AT THE SITE IN A CLEAN ORDERLY CONDITION AND SHALL BE READILY ACCESSIBLE AT ALL TIMES TO ALL THE CONTRACTOR'S EMPLOYEES.

G-17. SUBMIT SAFE WORK PLAN FOR ANN ARBOR APPROVAL WHICH MEETS OSHA REQUIREMENTS AND INCUDES CONFINED SPACE PROCEDURES. ANN ARBOR WWTP STAFF WILL NOT PROVIDE RESCUE SERVICES.

G-18. THE PROJECT INCLUDES DEMOLITION OF FLOORS, GRATINGS, PLATFORMS, STAIRS, RAILINGS, SAFETY EQUIPMENT, ETC. CONTRACTOR TO PROVIDE TEMPORARY FALL PROTECTION, TEMPORARY ACCESS TO EQUIPMENT, CONTROLS, TEMPORARY SAFETY CONTROLS, ETC. TO ENABLE CONTINUED OPERATION OF EQUIPMENT THAT IS IN SERVICE.

G-19. THE CONTRACTOR SHALL DESIGNATE CERTAIN EMPLOYEES WHO ARE PROPERLY INSTRUCTED TO BE IN CHARGE OF FIRST AID. AT LEAST ONE SUCH EMPLOYEE SHALL BE AVAILABLE WHENEVER WORK IS IN PROGRESS AT THE DEMOLITION SITE.

G-20. TELEPHONE CALL LISTS FOR SUMMONING AIDS FROM OUTSIDE SOURCES, SUCH AS DOCTORS, AMBULANCES, AND RESCUE SQUADS, SHALL BE CONSPICUOUSLY POSTED AT THE SITE.

G-21. CONTRACTOR SHALL SUBMIT FOR APPROVAL, BEFORE COMMENCING WORK:

a. SCHEDULE: SUBMIT FOR APPROVAL, PROPOSED METHODS, EQUIPMENT, AND OPERATING SEQUENCES. INCLUDE COORDINATION FOR SHUT-OFF, CAPPING, TEMPORARY SERVICES, CONTINUATION OF UTILITY SERVICES, AND OTHER APPLICABLE ITEMS TO ENSURE NO INTERRUPTION OF OWNER'S OPERATIONS.
b. A DETAILED SEQUENCE OF DEMOLITION AND REMOVAL WORK TO ENSURE UNINTERRUPTED OWNER OPERATION.
c. NAMES AND LOCATIONS OF PROPOSED LICENSED DISPOSAL SITES FOR ALL MATERIALS.
d. NOTIFY AND SCHEDULE ALL DEMOLITION WORK THROUGH THE PLANT SECURITY OFFICE.

G-22. THE CONTRACTOR SHALL:

a. CONFER WITH THE OWNER ON THE EXACT EXTENT OF THE SALVAGED ITEMS.
b. CAREFULLY REMOVE, TAG, AND CLEAN THE ITEM.
c. PLACE ON PALLET AND SAFELY TRANSPORT TO ON-SITE STORAGE GARAGE AS DIRECTED BY THE OWNER.

G-23. REMOVE AND RE-INSTALL ITEMS

a. THE CONTRACTOR AND OWNER SHALL OPERATE THE UNIT PRIOR TO REMOVAL, TO VERIFY PHYSICAL AND OPERATIONAL CONDITIONS.
b. IF REQUIRED, THE CONTRACTOR SHALL SAFELY AND PROPERLY STORE THE UNIT(S) ON-SITE.
c. THE CONTRACTOR SHALL BE RESPONSIBLE FOR MAINTENANCE DURING STORAGE.
d. REINSTALL ITEMS IN LOCATIONS INDICATED. COMPLY WITH INSTALLATION REQUIREMENTS FOR NEW MATERIALS AND EQUIPMENT. PROVIDE CONNECTIONS, SUPPORTS, AND MISCELLANEOUS MATERIALS NECESSARY TO MAKE ITEM FUNCTIONAL FOR USE INDICATED.

G-24. PROTECT EXISTING STRUCTURES AND OTHER ELEMENTS THAT ARE NOT TO BE REMOVED.

a. PROVIDE BRACING AND SHORING.
b. PREVENT MOVEMENT OR SETTLEMENT OF ADJACENT STRUCTURES.
c. STOP WORK IMMEDIATELY IF ADJACENT STRUCTURES APPEAR TO BE IN DANGER.
d. NO JACKHAMMERING OR OTHER DESTRUCTIVE METHODS OF CONSTRUCTION SHALL BE USED IN AREAS WHERE ADJACENT FACILITIES WHICH ARE TO REMAIN AND WHICH MAY BE DAMAGED BY SUCH OPERATIONS EXIST UNLESS APPROVED PRIOR BY ENGINEER.

G-25. ALL WORK SHALL BE COORDINATED WITH THE OWNER.

ARCHITECTURAL

A-1. ARCHITECTURAL DEMOLITION WORK SHALL BE INCLUDED IN THIS CONTRACT, AS INDICATED ON THE ARCHITECTURAL DRAWINGS AND SHALL BE INCLUDED BY THE CONTRACTOR IN THE BID PRICE. REFER TO GENERAL REQUIREMENTS THIS SHEET.
A-2. COORDINATE DEMOLITION WITH WALL OPENING DETAILS FOR NEW DOORS.
A-3. SELECTIVELY DEMOLISH PORTION OF EXISTING CHANNEL TO FACILITATE DRY PIT ROOM. VERIFY DIMENSIONS IN FIELD.
A-9 COORDINATE CONDUITS, PIPES, ETC. AT LOCATION OF NEW WALL OPENINGS. PROVIDE TEMPORARY SHORING AT NEW OPENINGS DURING CONSTRUCTION. COORDINATE OPENINGS WITH STRUCTURAL DETAILS.

PROCESS AND MECHANICAL

P-1. SALVAGE EQUIPMENT/MATERIALS - EQUIPMENT AND/OR EQUIPMENT COMPONENTS AND/OR MATERIALS TO BE SALVAGED OR RE-USED, ARE NOTED ON THE DRAWING. SEE SPECIFICATION 02050 - DEMOLITION WORK FOR MORE INFORMATION.

P-2. UNLESS ALLOWED IN THE SEQUENCE OF CONSTRUCTION, DO NOT REMOVE PIPE, VALVES, PUMPS, PROCESS, H&V, AND ELECTRIC EQUIPMENT UNTIL READY TO REPLACE WITH NEW EQUIPMENT. COORDINATE DEMOLITION WITH THE OWNER AND WITH THE REQUIREMENTS OF SECTION 01950-SEQUENCE OF CONSTRUCTION.

P-3. PROVIDE TEMPORARY BLIND FLANGES OR CAP ON WALL PENETRATIONS OR AT THE ENDS OF ALL PIPES. TEMPORARY FLANGES AND CAPS MUST BE INSTALLED AT THE END OF THE DAY ON ANY LIVE PIPES.

P-4. CAP POTABLE WATER, NON-POTABLE WATER, HYDRAULIC, COPPER AND ANY OTHER LINES AT WALL AND FILL SLEEVES OR WALL PENETRATIONS WITH NON-SHRINK GROUT.

P-5. COMPLETELY REMOVE PROCESS EQUIPMENT, PIPING, VALVES, BRACKETS, ANCHORS, AND SUPPORTS TO THE PROJECT BOUNDARY; REPLACE WITH NEW AS INDICATED IN THE CONTRACT DOCUMENTS.

P-6. REMOVE ALL FASTENERS, PLATES, SHIMS, ETC., AND PATCH FLOOR PENETRATIONS WITH NON-SHRINK GROUT. TORCH ANCHORS AND/OR REBAR BELOW THE CONCRETE SURFACE, AND PATH WITH NON-SHRINK GROUT.

ELECTRICAL

E-1. ELECTRICAL DEMOLITION WORK SHALL BE INCLUDED IN THIS CONTRACT, AS INDICATED ON THE DRAWINGS AND SHALL BE INCLUDED BY THE CONTRACTOR IN THE BID PRICE.

E-2. ALL ELECTRICAL WORK SHALL COMPLY WITH THE N.E.C., AND THE LOCAL CODES, ORDINANCES, AND REGULATIONS INCLUDING MIOSHA, SAFETY REGULATIONS AND LOCK-OUT/TAG-OUT PROCEDURES.

E-3. FOR ALL EQUIPMENT TO BE DEMOLISHED, REMOVE THE ASSOCIATED CONTROL PANELS, MOTORS, DISCONNECT SWITCHES, PUSHBUTTON STATIONS, OTHER EQUIPMENT AND ALL WIRE, CABLE AND EXPOSED CONDUIT BACK TO THE STARTER OR BREAKER IN THE MCC, DISTRIBUTION PANEL, OR LIGHTING PANEL.

E-4. WHERE CONDUIT TO BE DEMOLISHED ENTERS THE FLOOR SLAB OR OTHER CONCRETE PENETRATION, THE WIRE SHALL BE REMOVED, AND THE CONDUIT SHALL BE CUT FLUSH WITH THE FLOOR AND PLUGGED.

E-5. BREAKERS OR STARTERS FEEDING EXISTING DEMOLISHED EQUIPMENT THAT ARE NOT REUSED SHALL BE LABELED 'SPARE'.

INSTRUMENTATION & CONTROLS

I-1. SALVAGE INSTRUMENTS AND ASSOCIATED INSTRUMENT TRANSMITTER/INDICATORS (AS APPLICABLE) AND TURN OVER TO OWNER.

I-2. ALL ASSOCIATED WIRE, CABLE, AND CONDUIT SHALL BE REMOVED FROM THE INSTRUMENT BACK TO THE APPLICABLE CONTROL PANEL OR INDICATING UNIT.

811 Know what's below. Call before you dig.

REV.	DESCRIPTION	DATE	DRAWN	CHECKED
	50% DESIGN SUBMITTAL	10-01-2021		
	70% DESIGN SUBMITTAL	10-29-2021		
	90% DESIGN SUBMITTAL	11-22-2021		
	ISSUED FOR BIDS SET	12-13-2021		

CITY OF ANN ARBOR
PUBLIC SERVICES
301 E HURON STREET
P.O. BOX 8647
ANN ARBOR, MI 48107-8647
734.794.6410
www.a2gov.org

PROJECT MANAGEMENT - PUBLIC SERVICES - CITY OF ANN ARBOR

HEADWORKS IMPROVEMENTS PROJECT

GENERAL DEMOLITION NOTES

SCALE N.T.S.

DRAWING No. 100

SHEET No. DG-01

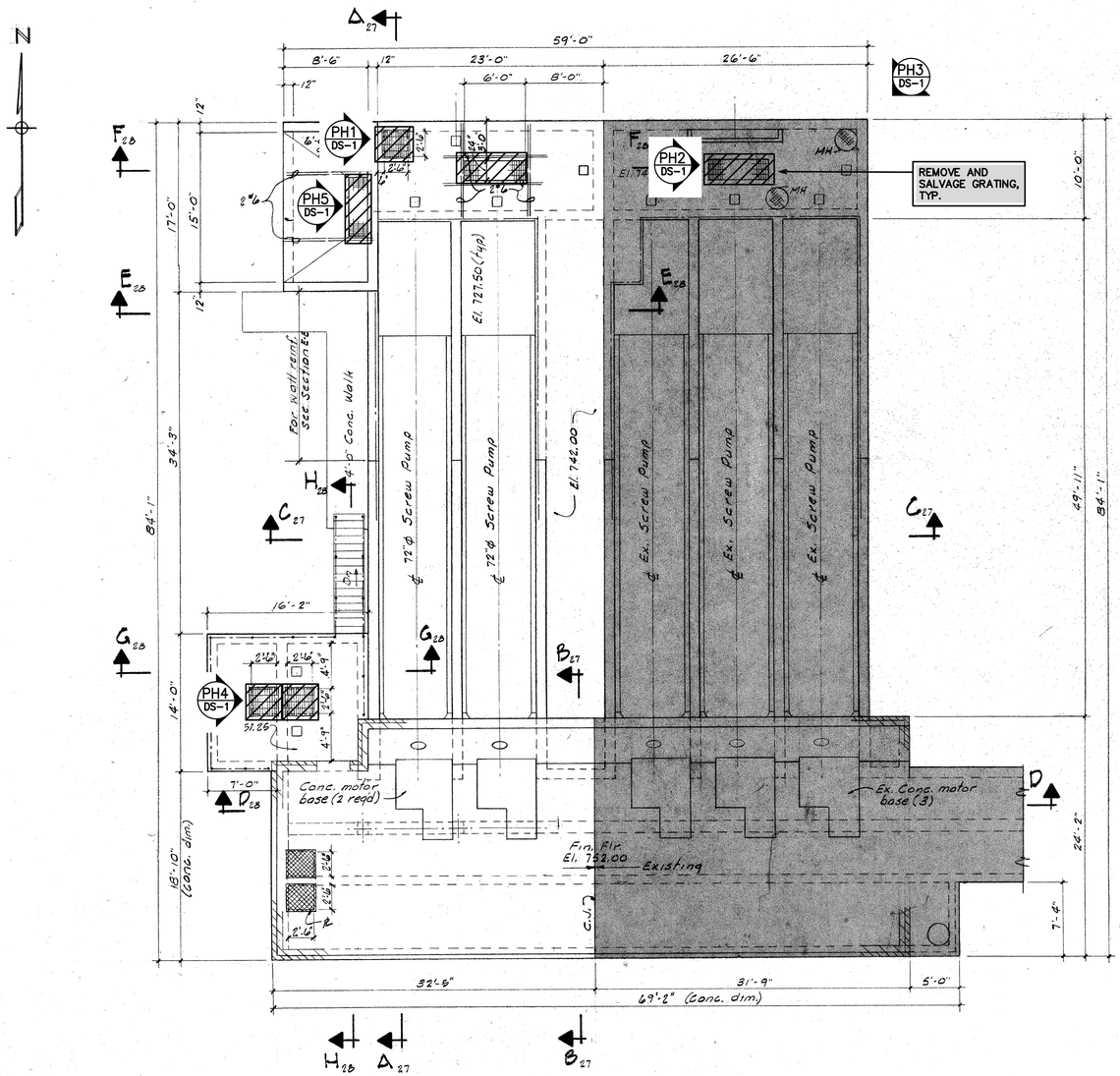

TOP PLAN

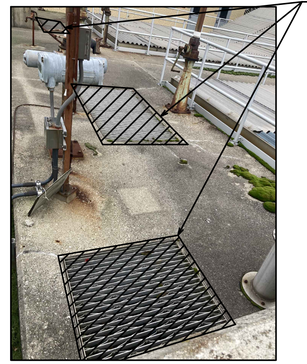

REMOVE AND SALVAGE GRATING, TYP.

PHOTO PH1 DS-1

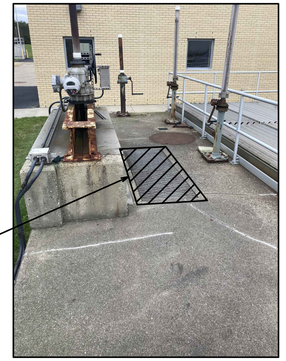

REMOVE AND SALVAGE GRATING, TYP.

PHOTO PH2 DS-1



LOCATE AND CUT OPN'G FOR ODOR CONTROL DUCTS, SEE M-6 FOR OPN'G SIZE & LOCATION, TYP-5

PHOTO PH3 DS-1

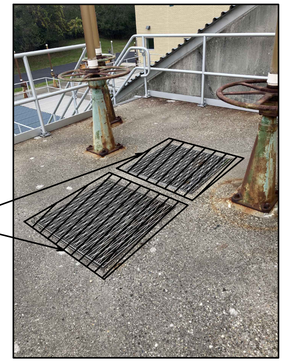

REMOVE AND SALVAGE GRATING, TYP.

PHOTO PH4 DS-1

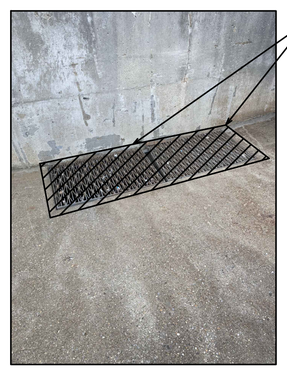

REMOVE AND SALVAGE GRATING, TYP.

PHOTO PH5 DS-1

NOTES: (FOR DWG'S DS-1 THRU DS-7)

1. SALVAGED GRATING, STAIRS AND HARDWARE SHALL BE CLEANED, STORED, AND PROTECTED AT A LOCATION APPROVED BY THE ENGINEER. SALVAGE ITEMS IN ACCORDANCE WITH SPECIFICATION 02050.
2. COORDINATE DEMOLITION PLAN ACTIVITIES SPECIFIED HEREIN WITH CIVIL, ARCHITECTURAL, PROCESS, MECHANICAL AND ELECTRICAL DEMOLITION DRAWINGS.
3. HISTORICAL ELEVATIONS ON THESE DRAWINGS ARE BASED ON NGVD OF 1929. THE PROPOSED ELEVATIONS AND WORK ITEMS HAVE BEEN CONVERTED TO NAVD 88 DATUM. THE FOLLOWING CONVERSION EQUATION MAY BE USED: NAVD 1988 ELEV = NGVD1929 ELEV. −0.50 FEET.
4. EXISTING EMBEDDED GRATING SUPPORT ANGLES ARE TO REMAIN.
5. THESE DRAWINGS HAVE BEEN COPIED FROM PREVIOUS CONSTRUCTION PROJECTS. NO GUARANTEE IS MADE, OR SHOULD BE ASSUMED AS TO THE COMPLETENESS OR ACCURACY OF THE INFORMATION SHOWN ON THESE DRAWINGS. PARTIES UTILIZING THIS INFORMATION SHALL FIELD VERIFY THE ACCURACY AND COMPLETENESS PRIOR TO CONSTRUCTION/DEMOLITION ACTIVITIES. THIS DRAWING IS NOT TO SCALE.
6. SELECT CONC DEMO AND SELECT MASONRY DEMO REFERS TO PARTIAL DEMOLITION AND OFFSITE DISPOSAL TO THE LIMITS AS SHOWN ON THE DRAWINGS.

811 Know what's below. Call before you dig.

REV.	DESCRIPTION	DATE	DRAWN	CHECKED
	50% DESIGN SUBMITTAL	10-01-2021	PMH	SDH
	70% DESIGN SUBMITTAL	10-29-2021	PMH	SDH
	90% DESIGN SUBMITTAL	11-22-2021	PMH	SDH
	ISSUED FOR BIDS SET	12-13-2021	PMH	SDH

CITY OF ANN ARBOR
PUBLIC SERVICES
301 EAST HURON STREET
P.O. BOX 8647
ANN ARBOR, MI 48107-8647
734.794.6410
www.a2gov.org

PROJECT MANAGEMENT - PUBLIC SERVICES - CITY OF ANN ARBOR

HEADWORKS IMPROVEMENTS PROJECT

RAW SEWAGE LIFT STATION DEMOLITION PLAN AND PHOTOS

SCALE N.T.S.

DRAWING No. 106

SHEET No. DS-1

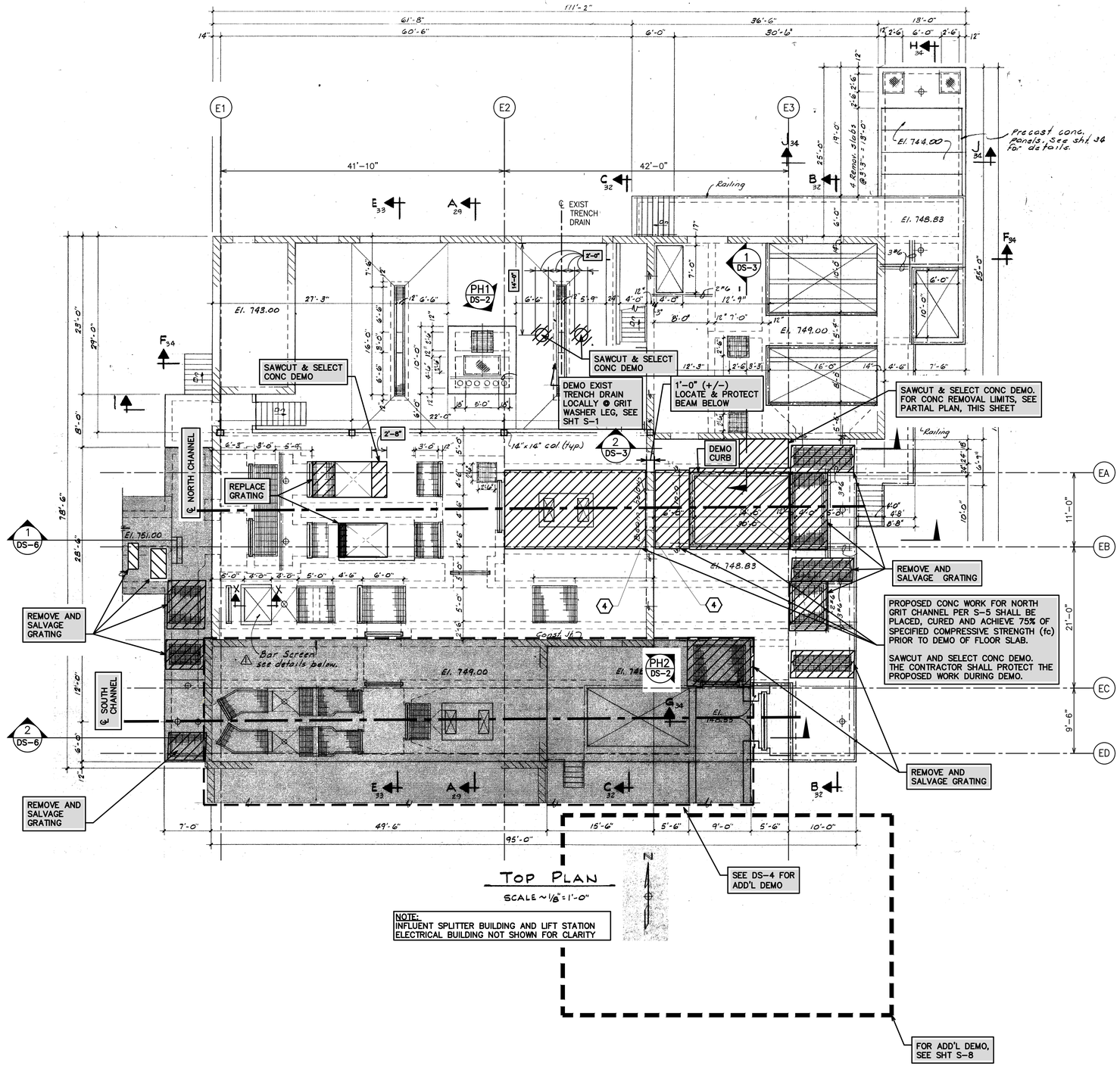

TOP PLAN

SCALE ~ 1/8" = 1'-0"

NOTE:
INFLUENT SPLITTER BUILDING AND LIFT STATION ELECTRICAL BUILDING NOT SHOWN FOR CLARITY



PHOTO PH1 DS-2



PHOTO PH2 DS-2

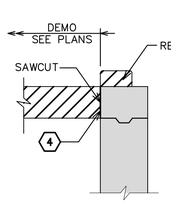

N & S GRIT CHANNEL WALLS

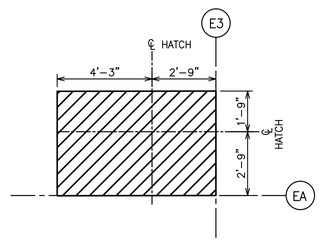

PARTIAL PLAN AT EL 748.33

811 Know what's below. Call before you dig.

REV.	DESCRIPTION	DATE	DRAWN	CHECKED
	ISSUED FOR BIDS SET	12-13-2021	PMH	SDH
	90% DESIGN SUBMITTAL	11-22-2021	PMH	SDH
	70% DESIGN SUBMITTAL	10-29-2021	PMH	SDH
	50% DESIGN SUBMITTAL	10-01-2021	PMH	SDH

CITY OF ANN ARBOR
PUBLIC SERVICES
301 EAST HURON STREET
P.O. BOX 8647
ANN ARBOR, MI 48107-8647
(734) 794-6410
www.a2gov.org

PROJECT MANAGEMENT - PUBLIC SERVICES - CITY OF ANN ARBOR

HEADWORKS IMPROVEMENTS PROJECT

NORTH SCREENING & GRIT DEMOLITION PLANS & SECTIONS

SCALE N.T.S.

DRAWING No. 107

SHEET No. DS-2

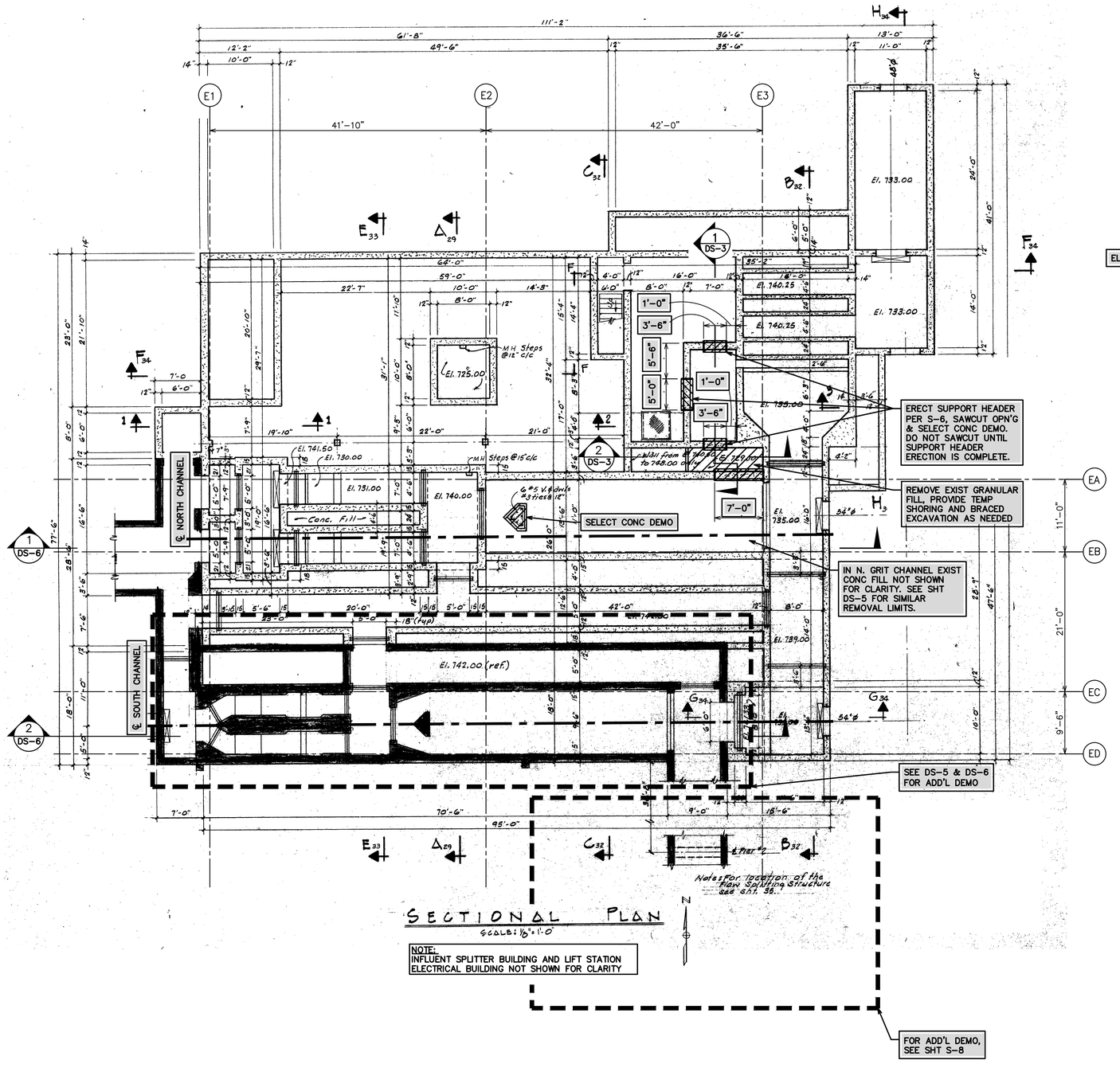

SECTIONAL PLAN

SCALE: 1/8" = 1'-0"

NOTE:
INFLUENT SPLITTER BUILDING AND LIFT STATION ELECTRICAL BUILDING NOT SHOWN FOR CLARITY

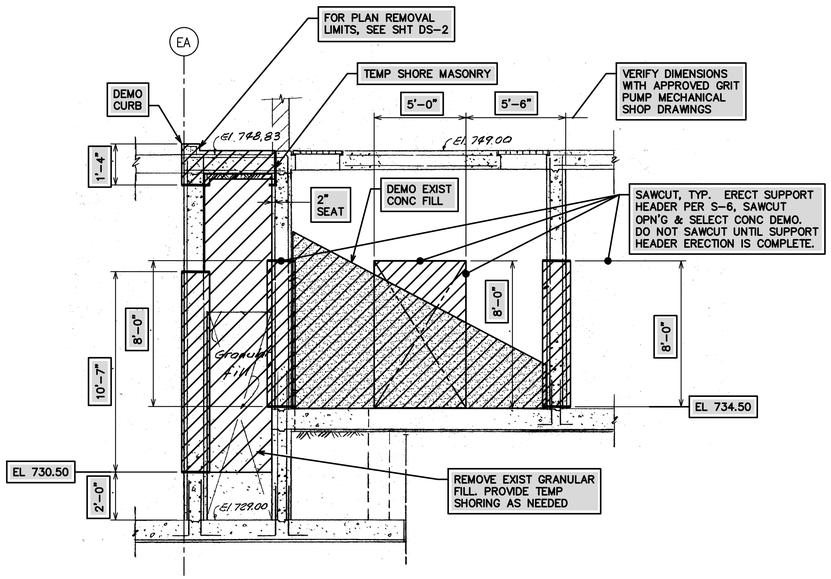

SECTION 1 DS-2/DS-3

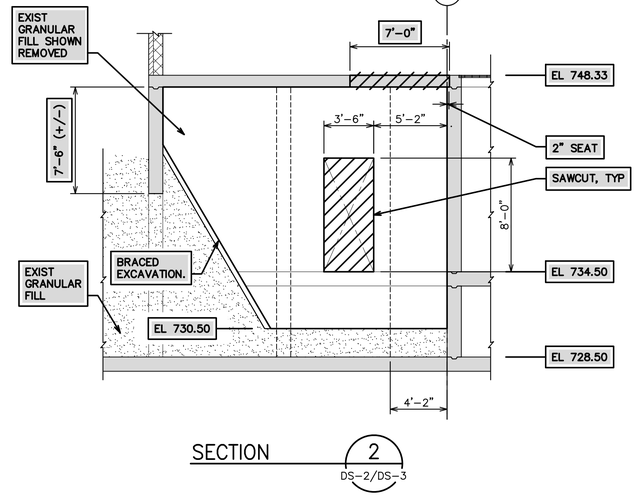

SECTION 2 DS-2/DS-3

Know what's below. Call before you dig. 811

REV.	DESCRIPTION	DATE	DRAWN	CHECKED
	ISSUED FOR BIDS SET	12-13-2021	PMH	SDH
	90% DESIGN SUBMITTAL	11-22-2021	PMH	SDH
	70% DESIGN SUBMITTAL	10-29-2021	PMH	SDH
	50% DESIGN SUBMITTAL	10-01-2021		

CITY OF ANN ARBOR
PUBLIC SERVICES
301 EAST HURON STREET
P.O. BOX 8647
ANN ARBOR, MI 48107-8647
(734) 794-6410
www.a2gov.org

PROJECT MANAGEMENT - PUBLIC SERVICES - CITY OF ANN ARBOR

HEADWORKS IMPROVEMENTS PROJECT

NORTH SCREENING & GRIT
DEMOLITION PLAN AND SECTIONS

SCALE N.T.S.

DRAWING No. 109

SHEET No. DS-3

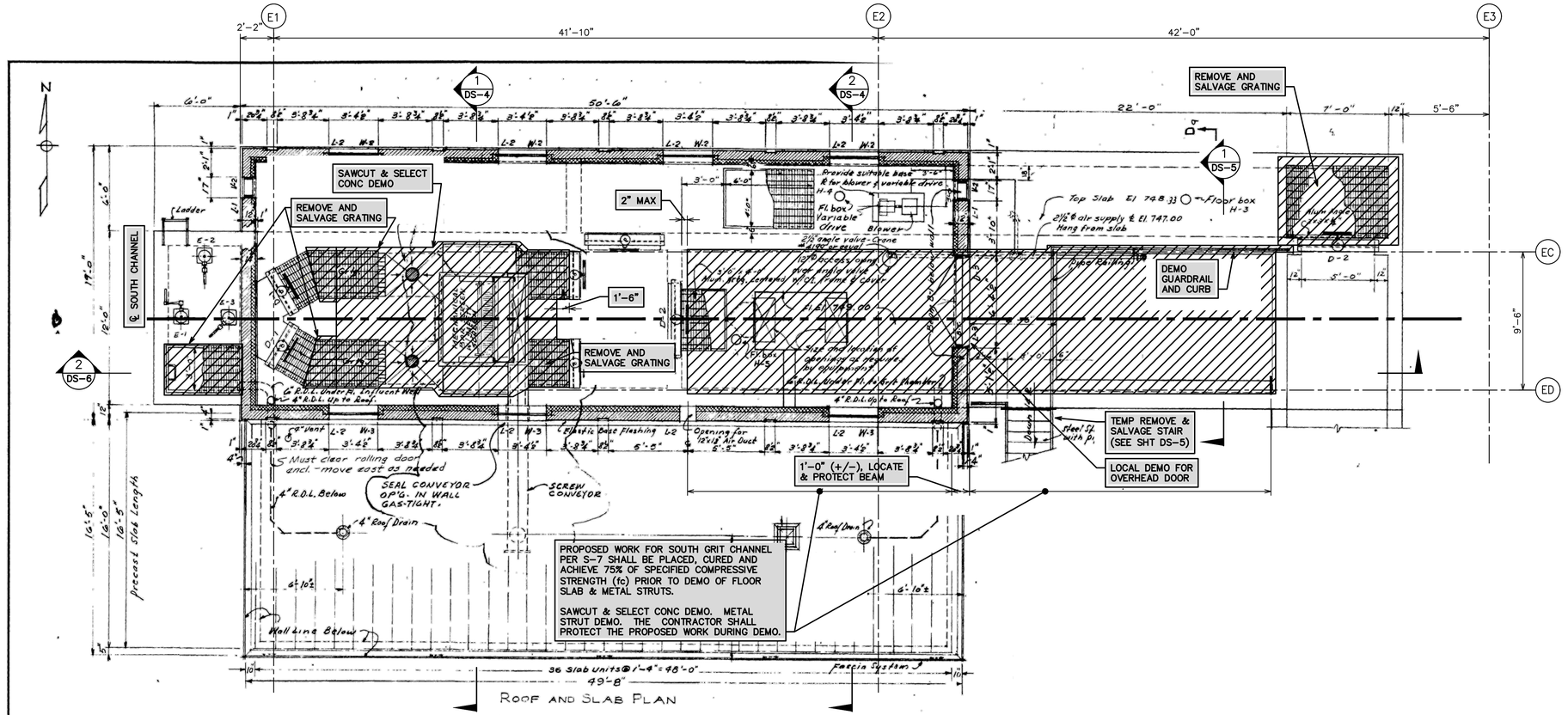

811 Know what's below. Call before you dig.

	ISSUED FOR BIDS SET	12-13-2021	PMH	SDH
	90% DESIGN SUBMITTAL	11-22-2021	PMH	SDH
	70% DESIGN SUBMITTAL	10-29-2021	PMH	SDH
	50% DESIGN SUBMITTAL	10-01-2021	DRAWN	CHECKED
REV.	DESCRIPTION	DATE		

CITY OF ANN ARBOR
PUBLIC SERVICES
301 E. HURON STREET
P.O. BOX 8647
ANN ARBOR, MI 48107-8647
734.794.6410
www.a2gov.org

PROJECT MANAGEMENT - PUBLIC SERVICES - CITY OF ANN ARBOR

HEADWORKS IMPROVEMENTS PROJECT

SOUTH SCREENING & GRIT DEMOLITION
PLAN & SECTIONS

McNAMEE, PORTER AND SEELEY
CONSULTING ENGINEERS
ANN ARBOR, MICHIGAN

SCALE	1/4" = 1'-0"	ISSUED	JUNE 1989
DRAWN	KEK	TRACED	JBN
CHECKED	GSB		

ISSUE	NATURE OF REVISION	DATE

CITY OF ANN ARBOR, MICHIGAN
WASTEWATER TREATMENT PLANT IMPROVEMENTS

SCREEN INSTALLATION DETAILS

CONTRACT 89-S-1 DIV. A

SHEET 4 OF 4

SCALE N.T.S.

DRAWING No. 111

SHEET No. DS-4

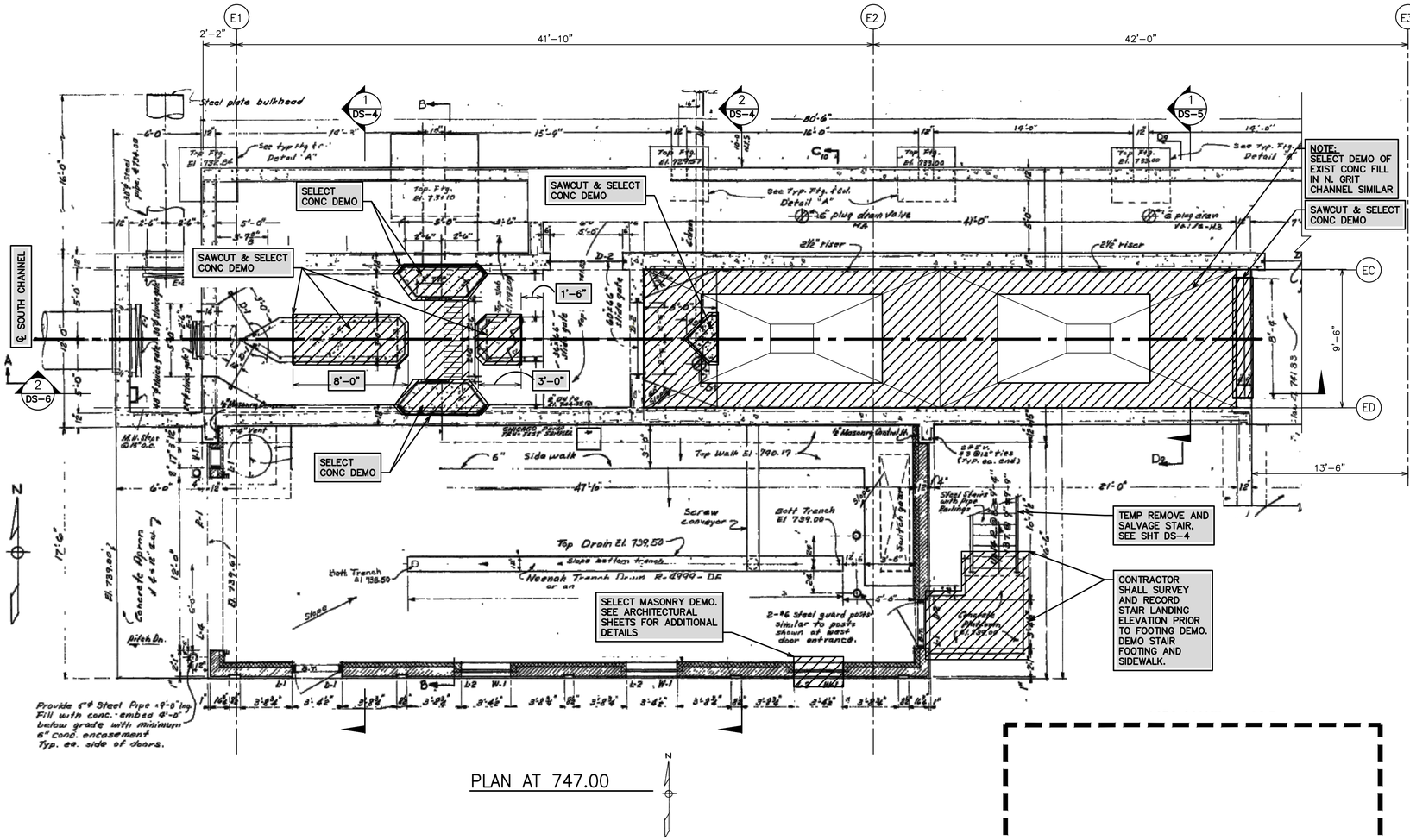

PROPOSED WORK FOR SOUTH GRIT CHANNEL PER S-7 SHALL BE PLACED, CURED AND ACHIEVE 75% OF SPECIFIED COMPRESSIVE STRENGTH (fc) PRIOR TO DEMO OF FLOOR SLAB & METAL STRUTS.

SAWCUT & SELECT CONC DEMO. METAL STRUT DEMO. THE CONTRACTOR SHALL PROTECT THE PROPOSED WORK DURING DEMO.

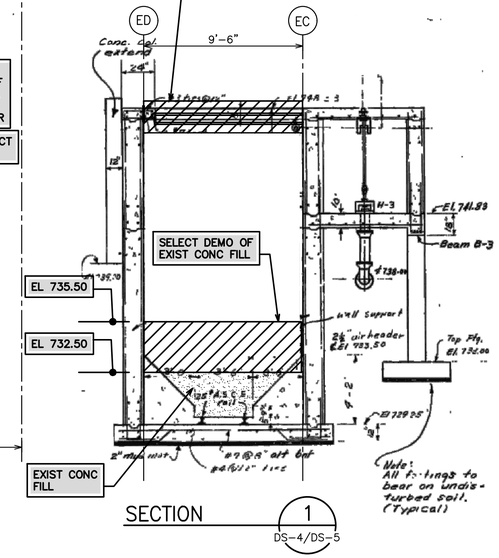

SECTION 1 DS-4/DS-5

ISSUED FOR BIDS SET	12-13-2021	PMH	SDH
90% DESIGN SUBMITTAL	11-22-2021	PMH	SDH
70% DESIGN SUBMITTAL	10-29-2021	PMH	SDH
50% DESIGN SUBMITTAL	10-01-2021	DRAWN	CHECKED
DESCRIPTION	DATE		
REV.			

Know what's below. Call before you dig. 811

CITY OF ANN ARBOR
PUBLIC SERVICES
301 E. HURON STREET
P.O. BOX 8647
ANN ARBOR, MI 48107-8647
(734) 794-6430
www.a2gov.org

PROJECT MANAGEMENT - PUBLIC SERVICES - CITY OF ANN ARBOR

HEADWORKS IMPROVEMENTS PROJECT

SOUTH SCREENS & GRIT DEMOLITION
PLAN AND SECTIONS

SCALE N.T.S.

DRAWING No. 114

SHEET No. DS-5

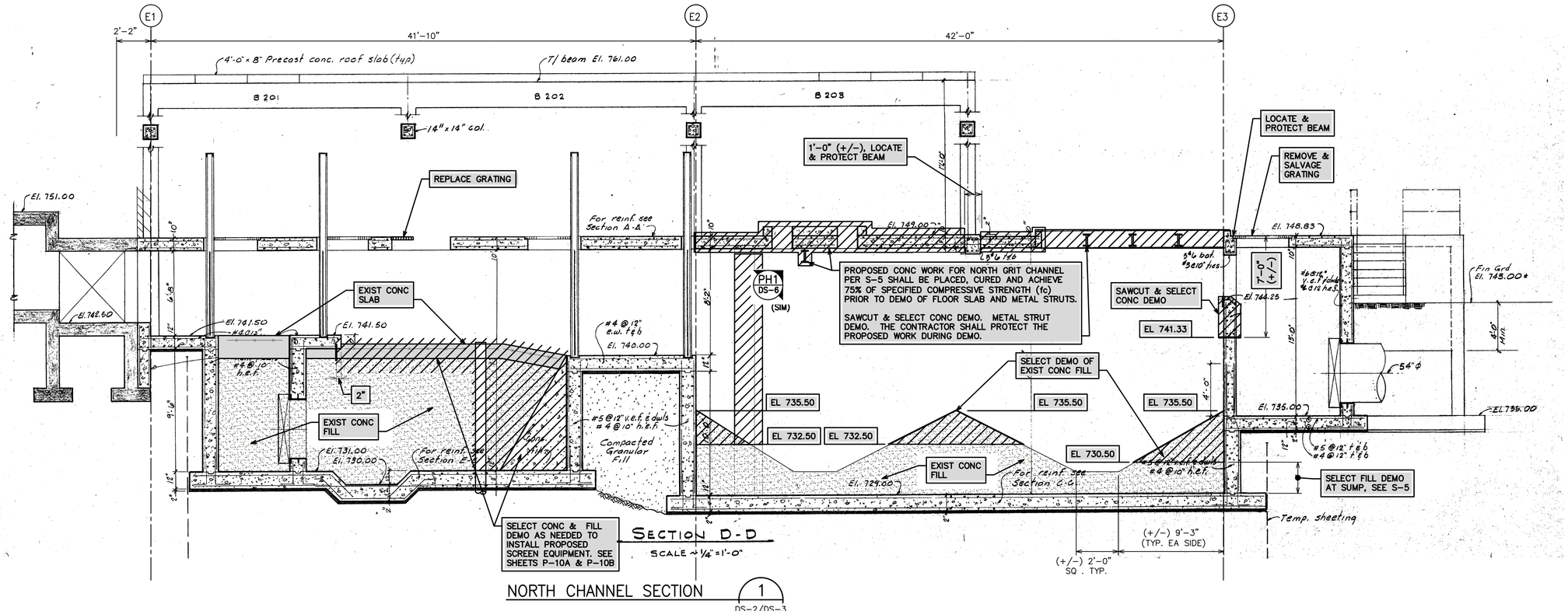

SECTION D-D
SCALE 1/4" = 1'-0"

NORTH CHANNEL SECTION 1
DS-2/DS-3

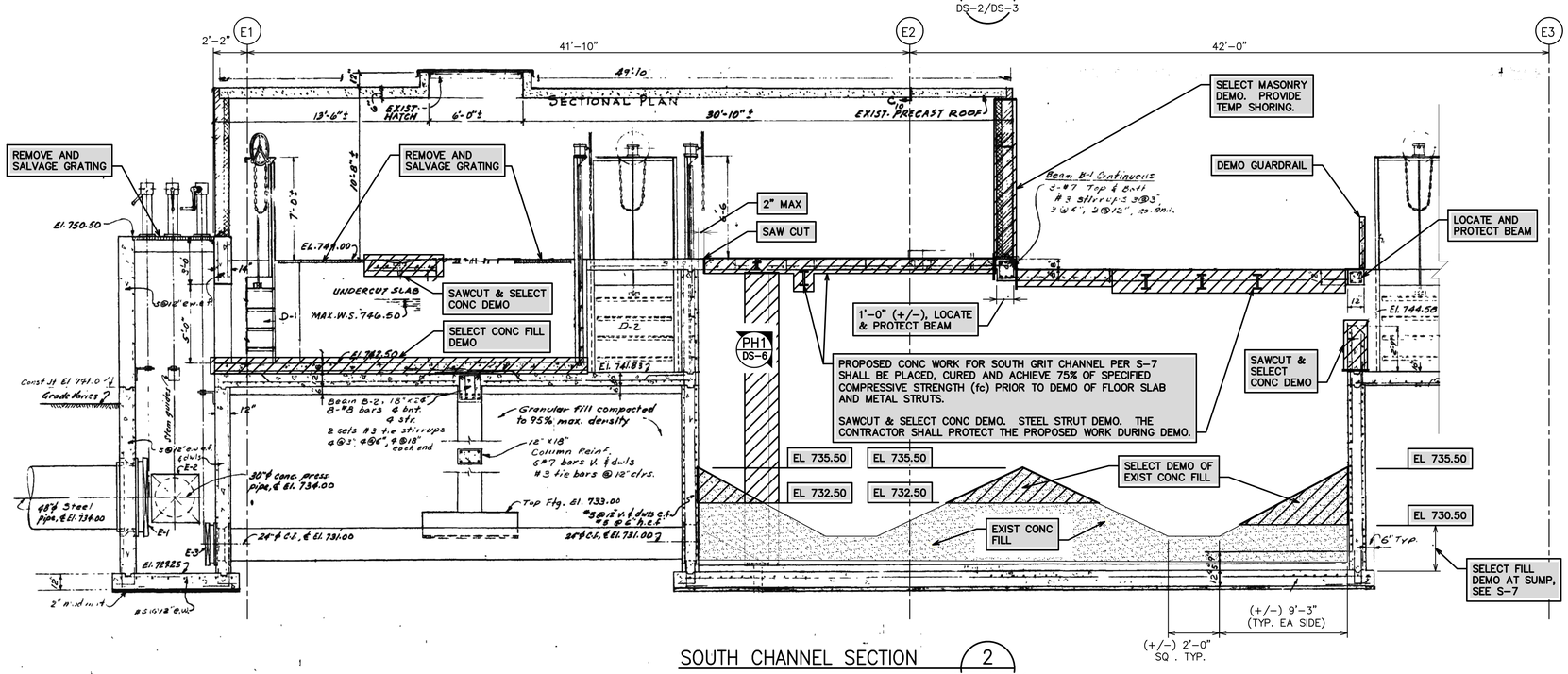

SOUTH CHANNEL SECTION 2
DS-2/DS-3/DS-4/DS-5

PROPOSED CONC WORK FOR NORTH & SOUTH GRIT CHANNEL SHALL BE PLACED, CURED AND ACHIEVE 75% OF SPECIFIED COMPRESSIVE STRENGTH (fc) PRIOR TO DEMO OF FLOOR SLAB & METAL STRUTS.

SAWCUT & SELECT CONC DEMO. METAL STRUT DEMO. THE CONTRACTOR SHALL PROTECT THE PROPOSED WORK DURING DEMO.

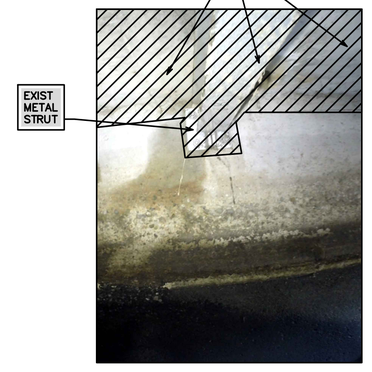

PHOTO PH1 DS-6

811 Know what's below. Call before you dig.

REV.	DESCRIPTION	DATE	DRAWN	CHECKED
	ISSUED FOR BIDS SET	12-13-2021	PMH	SDH
	90% DESIGN SUBMITTAL	11-22-2021	PMH	SDH
	70% DESIGN SUBMITTAL	10-29-2021	PMH	SDH
	50% DESIGN SUBMITTAL	10-01-2021		

CITY OF ANN ARBOR
PUBLIC SERVICES
301 E. HURON STREET
P.O. BOX 8647
ANN ARBOR, MI 48107-8647
(734) 794-6410
www.a2gov.org

PROJECT MANAGEMENT - PUBLIC SERVICES - CITY OF ANN ARBOR

HEADWORKS IMPROVEMENTS PROJECT
SCREENING & GRIT DEMOLITION SECTIONS

SCALE N.T.S.
DRAWING No. 115

SHEET No. DS-6

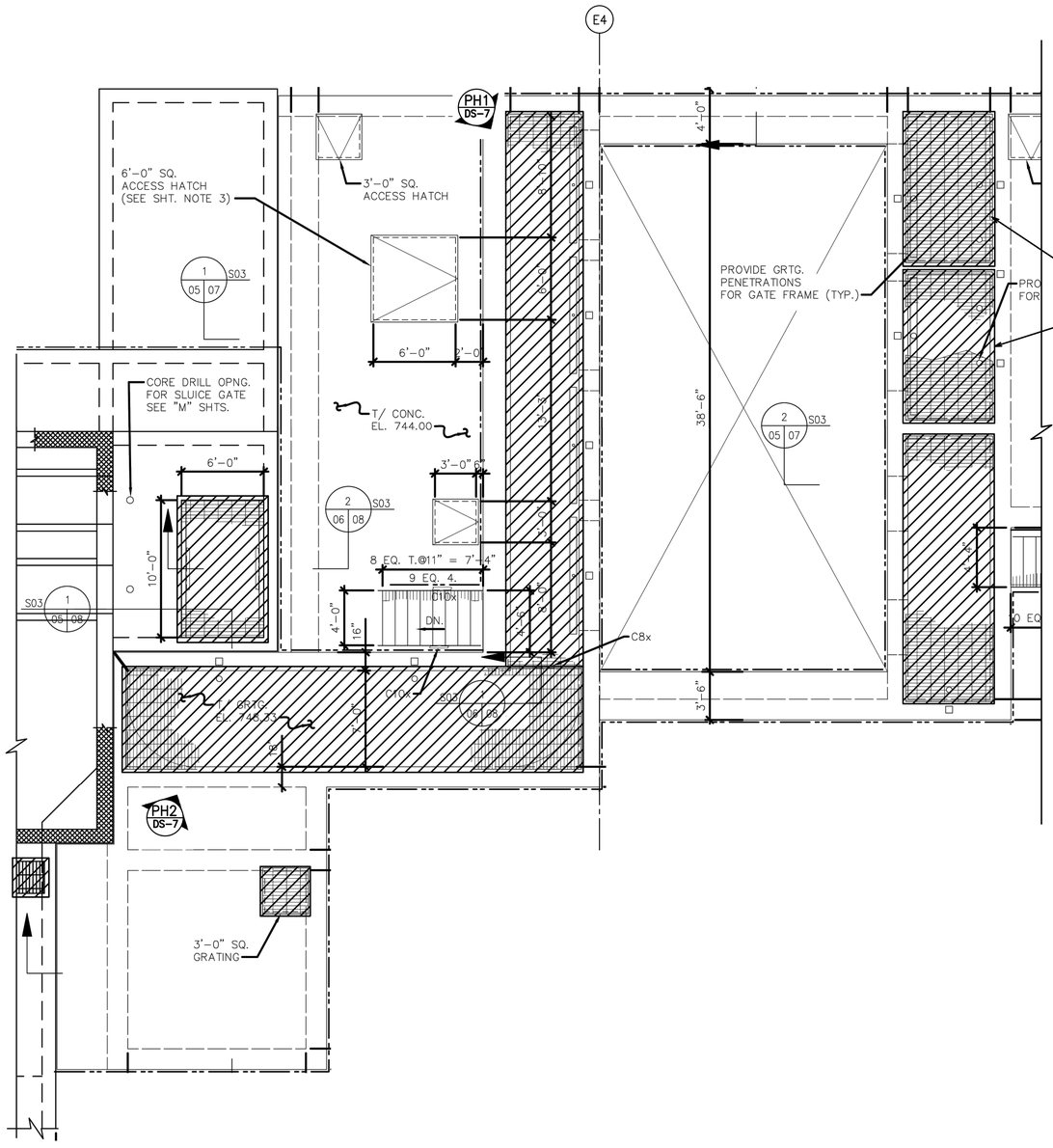

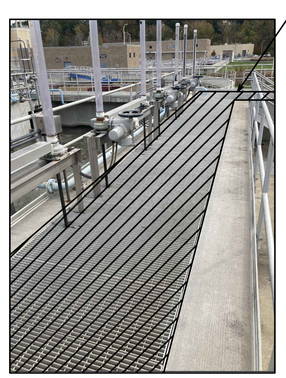

PHOTO PH1 DS-7

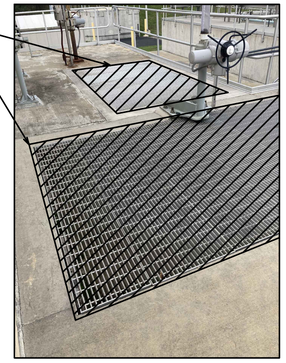

PHOTO PH2 DS-7

NOTE:
1. NO DATUM CONVERSION REQUIRED FOR COPIED ELEVATIONS ON THIS DRAWING.

811 Know what's below. Call before you dig.

REV.	DESCRIPTION	DATE	DRAWN	CHECKED
	ISSUED FOR BIDS SET	12-13-2021	PMH	SDH
	90% DESIGN SUBMITTAL	11-22-2021	PMH	SDH
	70% DESIGN SUBMITTAL	10-29-2021	PMH	SDH
	50% DESIGN SUBMITTAL	10-01-2021		

CITY OF ANN ARBOR
PUBLIC SERVICES
301 EAST HURON STREET
P.O. BOX 8647
ANN ARBOR, MI 48107-8647
734-794-6410
www.a2gov.org

PROJECT MANAGEMENT - PUBLIC SERVICES - CITY OF ANN ARBOR

HEADWORKS IMPROVEMENTS PROJECT

INFLUENT SPLITTER DEMOLITION PLAN

SCALE N.T.S.

DRAWING No. 118

SHEET No. DS-7

NOTE:

THESE DRAWINGS ARE BASED ON FIELD MEASUREMENTS AND INDICATE THE GENERAL ARRANGEMENT OF THE EXISTING FACILITY. NO GUARANTEE IS MADE, OR SHOULD BE ASSUMED, AS TO THE COMPLETENESS OR ACCURACY OF THE INFORMATION SHOWN ON THIS DRAWING. PARTIES USING THIS INFORMATION SHALL FIELD VERIFY THE ACCURACY AND COMPLETENESS PRIOR TO DEMOLITION AND CONSTRUCTION ACTIVITIES.

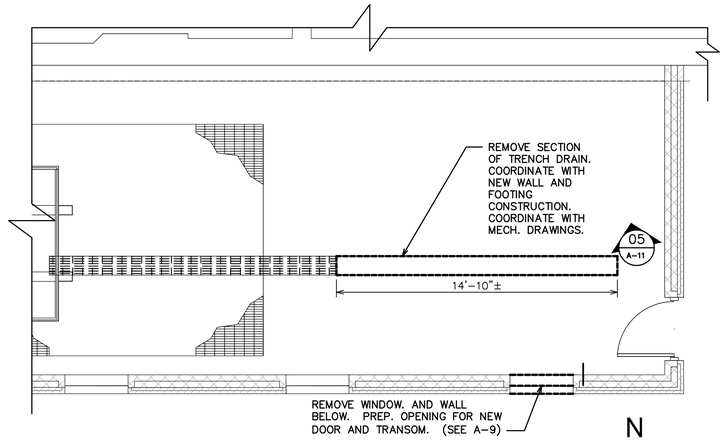

GARAGE DEMO FLOOR PLAN
SCALE: 1/4" = 1'-0"

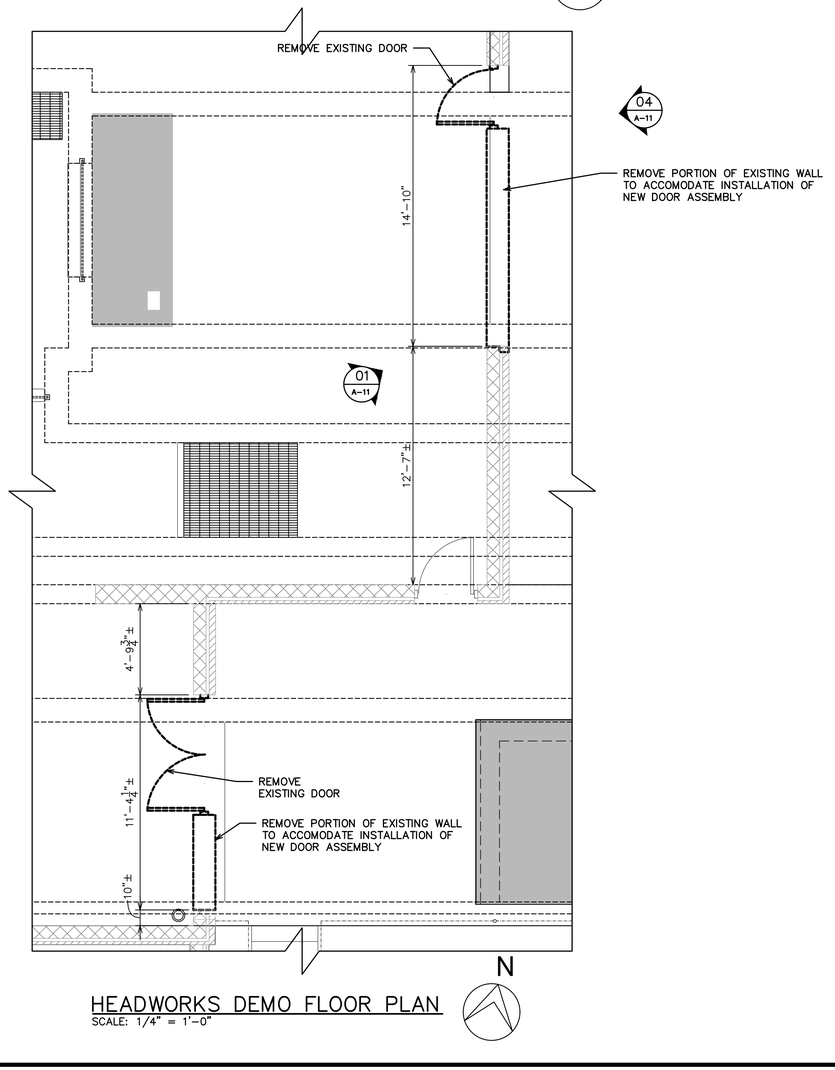

HEADWORKS DEMO FLOOR PLAN
SCALE: 1/4" = 1'-0"

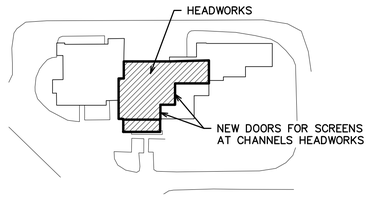

KEY PLAN
SCALE: N.T.S.

811 Know what's below. Call before you dig.

REV.	DESCRIPTION	DATE	DRAWN	CHECKED
	ISSUED FOR BIDS SET	12-13-2021		
	90% DESIGN SUBMITTAL	11-22-2021		
	70% DESIGN SUBMITTAL	10-29-2021		
	50% DESIGN SUBMITTAL	10-01-2021		

CITY OF ANN ARBOR
PUBLIC SERVICES
301 EAST HURON STREET
P.O. BOX 8647
ANN ARBOR, MI 48107-8647
734-794-6410
www.a2gov.org

PROJECT MANAGEMENT - PUBLIC SERVICES - CITY OF ANN ARBOR

HEADWORKS IMPROVEMENTS PROJECT
HEADWORKS BUILDING DEMOLITION PLANS

SCALE: AS SHOWN
DRAWING No. 120

SHEET No.
DA-1

REMOVE EXISTING EQUIPMENT PER DEMOLITION PLAN

PROTECT EXISTING HVAC DUCTWORK THROUGHOUT CONSTRUCTION (TYP.)

PROTECT EXISTING GUARDRAIL THROUGHOUT CONSTRUCTION

PROTECT ALL EXISTING ISOLATION GATES, ACTUATION DEVICES AND ASSOCIATED CONDUIT THROUGHOUT CONSTRUCTION

REMOVE AND SALVAGE EXISTING LEVEL SENSOR EQUIPMENT (TYP. 2)

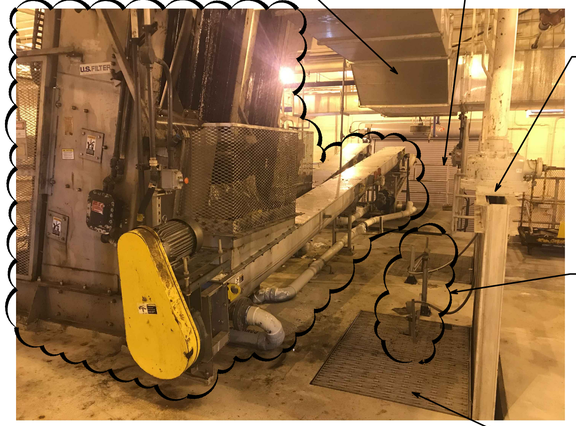

REMOVE AND REINSTALL EXISTING GRATING (TYP.)

PHOTO 1 – NORTH CHANNEL SCREENS REAR

PROTECT ALL EXISTING ISOLATION GATES, ACTUATION DEVICES, AND ASSOCIATED CONDUIT THROUGHOUT CONSTRUCTION.

REMOVE EXISTING MECHANICAL SCREENS, SCREEN GUARDS, AND ASSOCIATED ELECTRICAL EQUIPMENT AND CONDUIT TO SOURCE (TYP.)



REMOVE AND SALVAGE EXISTING GRATING (TYP.)

REMOVE AND SALVAGE EXISTING LEVEL CONTROL DEVICES (TYP. 2)

PHOTO 2 – NORTH CHANNEL SCREENS FRONT

GENERAL NOTES:

1. REMOVE EXISTING EQUIPMENT AS INDICATED AND LEGALLY DISPOSE OFF–SITE AS OUTLINED IN SPECIFICATION 02050 – DEMOLITION WORK AND DG–01.

2. SALVAGED ITEMS SHALL BE CLEANED, STORED, AND PROTECTED AT A LOCATION APPROVED BY THE ENGINEER. SALVAGE ITEMS IN ACCORDANCE WITH SPECIFICATION 02050 – DEMOLITION WORK.

3. PROTECT ALL EXISTING ISOLATION GATES AND ASSOCIATED APPURTENANCES THROUGHOUT THE ENTIRETY OF CONSTRUCTION.

4. FOR ELECTRICAL DEMOLITION, REFER TO SHEET DE–XX.

5. FOR STRUCTURAL DEMOLITION, REFER TO SHEET DS–02 THRU DS–04.

6. REMOVE, CLEAN, STORE, AND PROTECT ROOF HATCHES TO BE REINSTALLED EQUIPMENT AT A LOCATION APPROVED BY THE ENGINEER, REINSTALL ROOF HATCHES IN ACCORDANCE WITH SPECIFICATION 02050 – DEMOLITION WORK. SEE SHEET A–XX REGARDING ROOF HATCH DETAILS.

7. CONFIRM ALL EXISTING UTILITIES, CONDUIT PIPING, EQUIPMENT LOCATIONS, ETC. PRIOR TO CONSTRUCTION.

8. ALL DUCTWORK WITHIN THE HEADWORKS BUILDING TO BE PROTECTED AND TO REMAIN IN SERVICE THROUGHOUT CONSTRUCTION. SEE SPECIFICATION 02050 – DEMOLITION WORK

9. REMOVE ALL INCIDENTAL CONDUIT, PIPING, VALVES, ETC. ASSOCIATED WITH MECHANICAL SCREENS AND SEAL ANY WALL OR FLOOR PENETRATIONS.

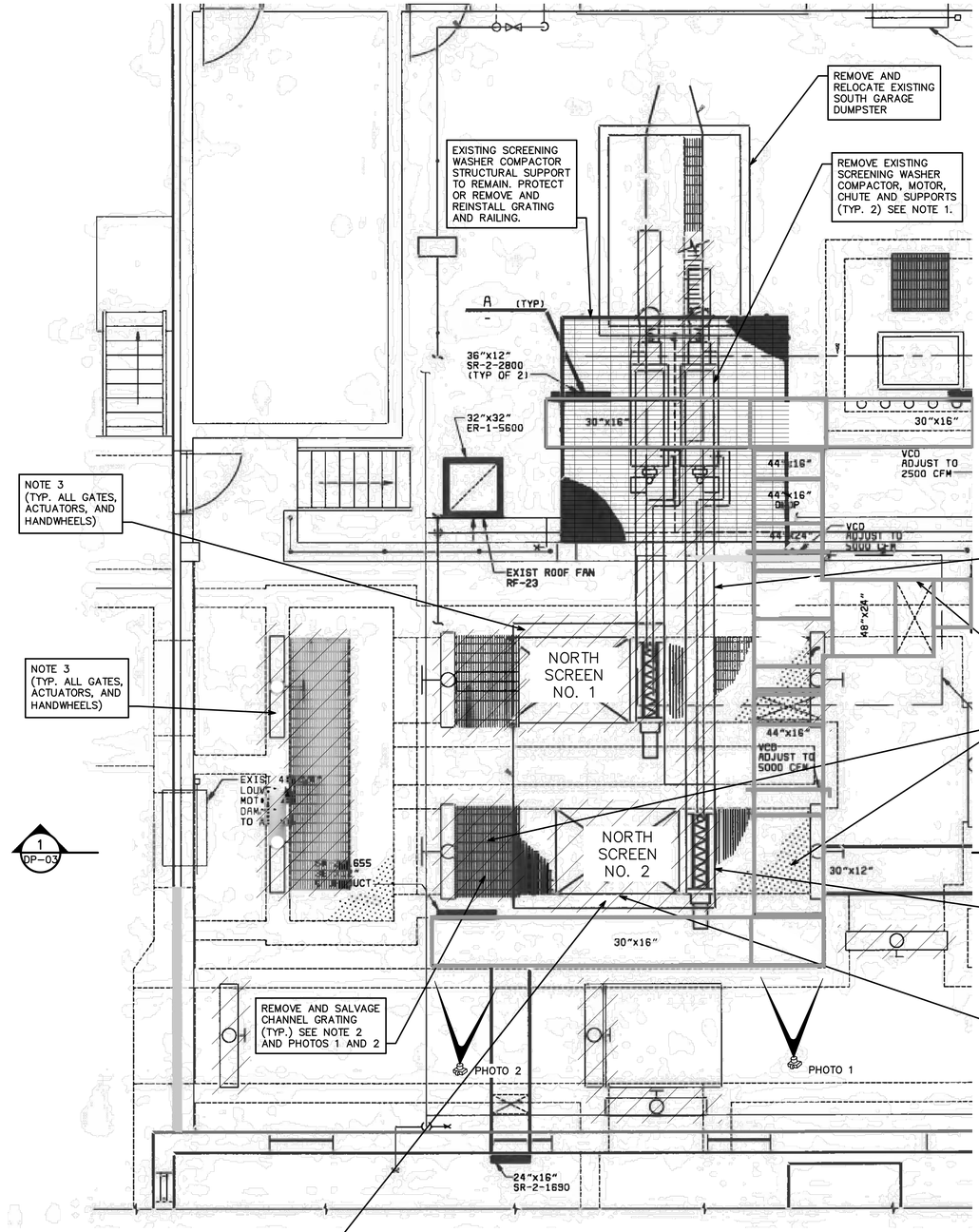

NORTH SCREENING CHANNELS DEMOLITION PLAN

NOTE:

THIS DRAWING HAS BEEN COPIED FROM A PREVIOUS CONSTRUCTION PROJECT AND IS PROVIDED FOR INFORMATION ONLY. THIS DRAWING HAS BEEN REDUCED AND IS THEREFORE NOT TO SCALE. NO GUARANTEE IS MADE, OR SHOULD BE ASSUMED, AS TO THE COMPLETENESS OR ACCURACY OF THE INFORMATION SHOWN ON THIS DRAWING. PARTIES UTILIZING THIS INFORMATION SHALL FIELD VERIFY THE ACCURACY AND COMPLETENESS PRIOR TO CONSTRUCTION ACTIVITIES.

811 Know what's below. Call before you dig.

REV.	DESCRIPTION	DATE	DRAWN	CHECKED
	ISSUED FOR BIDS SET	12–13–2021		
	90% DESIGN SUBMITTAL	11–22–2021		
	70% DESIGN SUBMITTAL	10–29–2021		
	50% DESIGN SUBMITTAL	10–01–2021		

CITY OF ANN ARBOR
PUBLIC SERVICES
301 EAST HURON STREET
P.O. BOX 8647
ANN ARBOR, MI 48107-8647
734.794.6410
www.a2gov.org

PROJECT MANAGEMENT - PUBLIC SERVICES - CITY OF ANN ARBOR

HEADWORKS IMPROVEMENTS PROJECT

NORTH SCREENING CHANNEL DEMOLITION PLAN

SCALE N.T.S.

DRAWING No. 130

SHEET No. DP–01

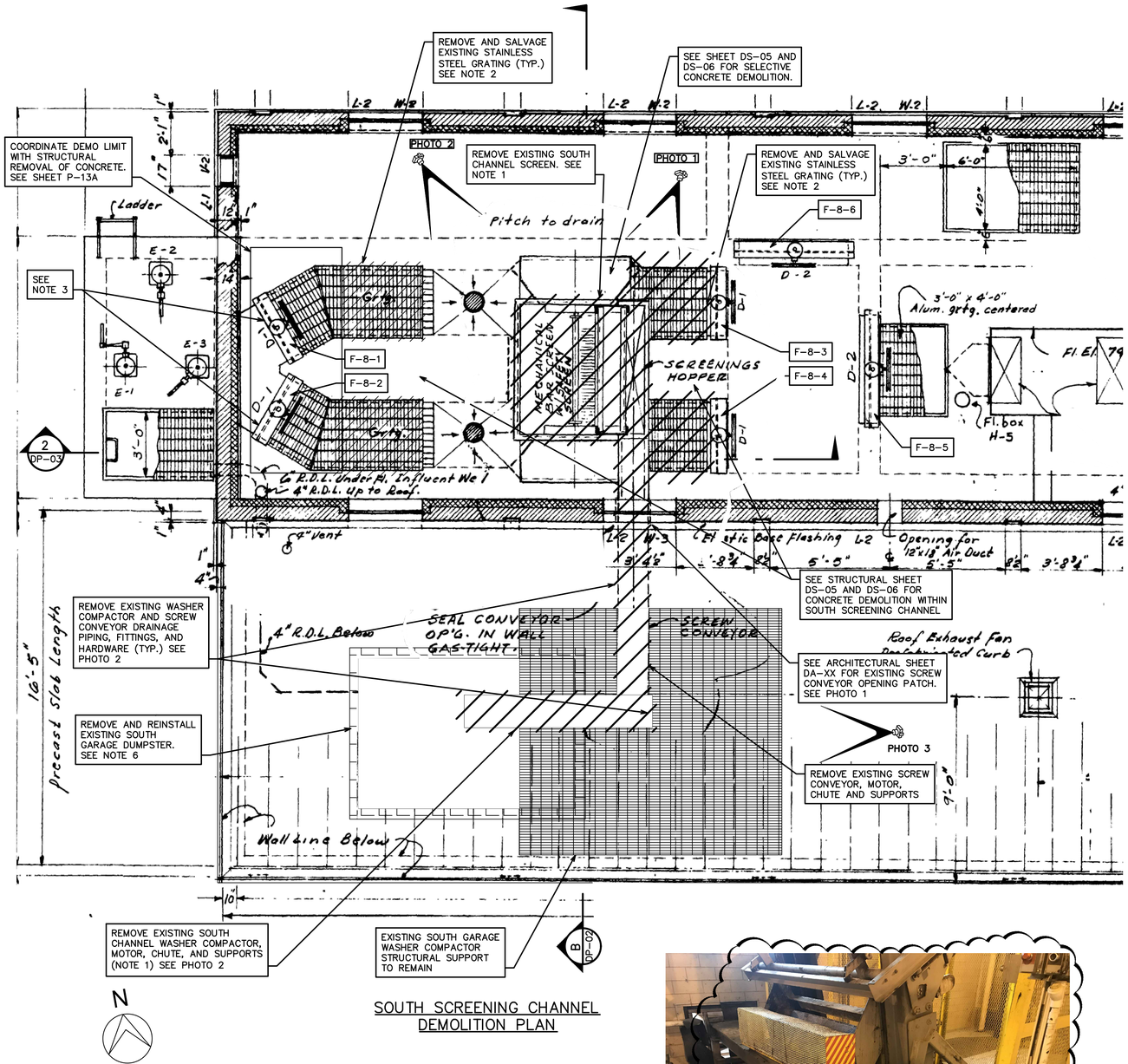

SOUTH SCREENING CHANNEL DEMOLITION PLAN

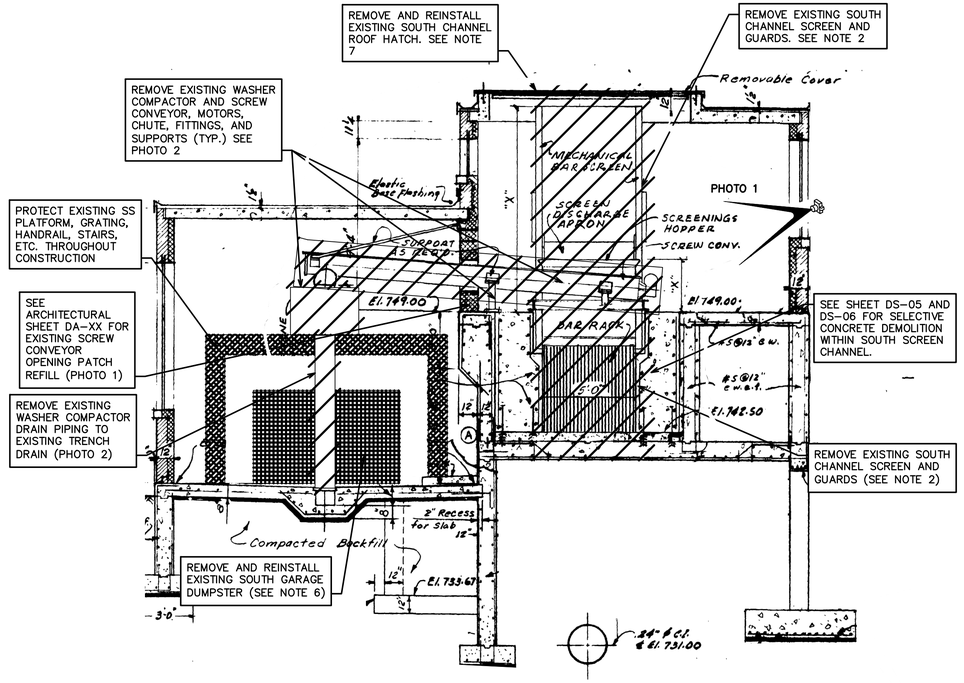

SOUTH GARAGE AND SOUTH HEADWORKS BUILDING SECTION B DP-02

SCALE: N.T.S.



PHOTO 2 –SOUTH CHANNEL SCREEN FRONT



PHOTO 1 – SOUTH CHANNEL SCREEN REAR AND SOUTH GARAGE WALL OPENING



PHOTO 3 – SOUTH GARAGE WASHER COMPACTOR AREA

GENERAL NOTES:

1. REMOVE EXISTING EQUIPMENT AS INDICATED AND LEGALLY DISPOSE OFF-SITE AS OUTLINED IN SPECIFICATION 02050 – DEMOLITION WORK.
2. SALVAGED ITEMS SHALL BE CLEANED, STORED, AND PROTECTED AT A LOCATION APPROVED BY THE ENGINEER. SALVAGE ITEMS IN ACCORDANCE WITH SPECIFICATION 02050 – DEMOLITION WORK.
3. PROTECT ALL EXISTING ISOLATION GATES AND ASSOCIATED APPURTENANCES THROUGHOUT THE ENTIRETY OF CONSTRUCTION.
4. FOR ELECTRICAL DEMOLITION, REFER TO SHEET DE-XX.
5. CONFIRM ALL EXISTING UTILITIES, CONDUIT PIPING, EQUIPMENT LOCATIONS, ETC. PRIOR TO CONSTRUCTION.
6. FOR STRUCTURAL DEMOLITION AND REPAIRS REFER TO SHEETS DS-05 AND DS-06 AND S-XX THROUGH S-XX.
7. EXISTING SOUTH CHANNEL ROOF HATCH TO BE REMOVED AND REINSTALLED. EXISTING ROOF HATCH TO BE MODIFIED FOR EASE OF REMOVAL. SEE SHEET A-XX FOR DETAILS.

NOTE:

THIS DRAWING HAS BEEN COPIED FROM A PREVIOUS CONSTRUCTION PROJECT AND IS PROVIDED FOR INFORMATION ONLY. THIS DRAWING HAS BEEN REDUCED AND IS THEREFORE NOT TO SCALE. NO GUARANTEE IS MADE, OR SHOULD BE ASSUMED, AS TO THE COMPLETENESS OR ACCURACY OF THE INFORMATION SHOWN ON THIS DRAWING. PARTIES UTILIZING THIS INFORMATION SHALL FIELD VERIFY THE ACCURACY AND COMPLETENESS PRIOR TO CONSTRUCTION ACTIVITIES.

811 Know what's below. Call before you dig.

REV.	DESCRIPTION	DATE	DRAWN	CHECKED
	ISSUED FOR BIDS SET	12-13-2021		
	90% DESIGN SUBMITTAL	11-22-2021		
	70% DESIGN SUBMITTAL	10-29-2021		
	50% DESIGN SUBMITTAL	10-01-2021		

CITY OF ANN ARBOR
PUBLIC SERVICES
301 E. HURON STREET
P.O. BOX 8647
ANN ARBOR, MI 48107-8647
(734) 794-6410
www.a2gov.org

PROJECT MANAGEMENT - PUBLIC SERVICES - CITY OF ANN ARBOR

HEADWORKS IMPROVEMENTS PROJECT

SOUTH SCREENING CHANNEL DEMOLITION PLAN

SCALE N.T.S.

DRAWING No. 132

SHEET No. DP-02

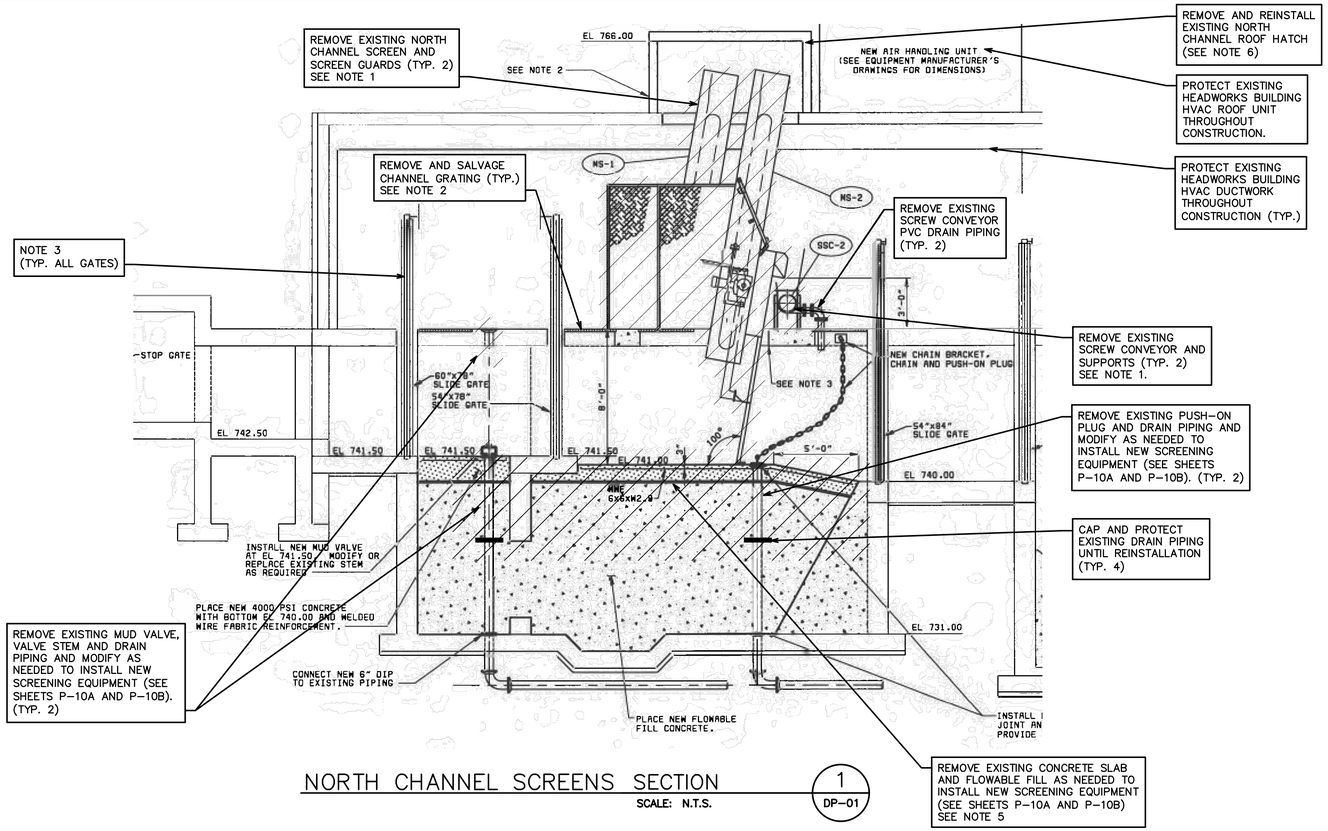

NORTH CHANNEL SCREENS SECTION

SCALE: N.T.S.

1 / DP-01

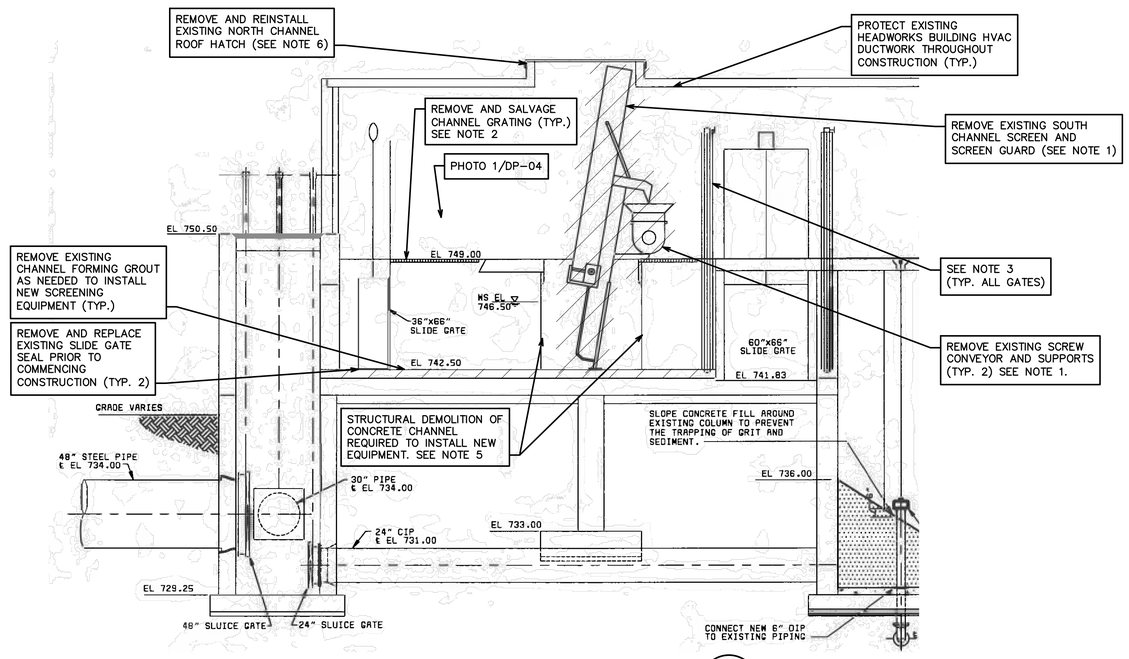

SOUTH CHANNEL SCREENS SECTION

SCALE: N.T.S.

2 / DP-02

GENERAL NOTES:

1. REMOVE EXISTING EQUIPMENT AS INDICATED AND LEGALLY DISPOSE OFF-SITE AS OUTLINED IN SPECIFICATION 02050 – DEMOLITION WORK.
2. SALVAGED ITEMS SHALL BE CLEANED, STORED, AND PROTECTED AT A LOCATION APPROVED BY THE ENGINEER. SALVAGE ITEMS IN ACCORDANCE WITH SPECIFICATION 02050 – DEMOLITION WORK.
3. PROTECT ALL EXISTING ISOLATION GATES AND ASSOCIATED APPURTENANCES THROUGHOUT THE ENTIRETY OF CONSTRUCTION.
4. FOR ELECTRICAL DEMOLITION, REFER TO SHEET DE-XX.
5. FOR STRUCTURAL DEMOLITION, REFER TO SHEET DS-05 and DS-06.
6. REMOVE, CLEAN, STORE, AND PROTECT ROOF HATCHES TO BE REINSTALLED EQUIPMENT AT A LOCATION APPROVED BY THE ENGINEER, REINSTALL ROOF HATCHES IN ACCORDANCE WITH SPECIFICATION 02050 – DEMOLITION WORK. SEE SHEET A-XX REGARDING ROOF HATCH DETAILS.
7. CONFIRM ALL EXISTING UTILITIES, CONDUIT PIPING, EQUIPMENT LOCATIONS, ETC. PRIOR TO CONSTRUCTION.
8. NOTE – HISTORICAL DRAWING ELEVATIONS BASED ON NGVD OF 1929 AND THE PROPOSED DRAWINGS HAVE BEEN CONVERTED TO NAVD 8 DATUM

NOTE:

THIS DRAWING HAS BEEN COPIED FROM A PREVIOUS CONSTRUCTION PROJECT AND IS PROVIDED FOR INFORMATION ONLY. THIS DRAWING HAS BEEN REDUCED AND IS THEREFORE NOT TO SCALE. NO GUARANTEE IS MADE, OR SHOULD BE ASSUMED, AS TO THE COMPLETENESS OR ACCURACY OF THE INFORMATION SHOWN ON THIS DRAWING. PARTIES UTILIZING THIS INFORMATION SHALL FIELD VERIFY THE ACCURACY AND COMPLETENESS PRIOR TO CONSTRUCTION ACTIVITIES.

811 Know what's below. Call before you dig.

REV.	DESCRIPTION	DATE	DRAWN	CHECKED
	ISSUED FOR BIDS SET	12-13-2021		
	90% DESIGN SUBMITTAL	11-22-2021		
	70% DESIGN SUBMITTAL	10-29-2021		
	50% DESIGN SUBMITTAL	10-01-2021		

CITY OF ANN ARBOR
PUBLIC SERVICES
301 E. HURON STREET
P.O. BOX 8647
ANN ARBOR, MI 48107-8647
734.794.6410
www.a2gov.org

PROJECT MANAGEMENT - PUBLIC SERVICES - CITY OF ANN ARBOR

HEADWORKS IMPROVEMENTS PROJECT

SCREENING CHANNELS DEMOLITION SECTIONS

SCALE N.T.S.

DRAWING No. 134

SHEET No. DP-03

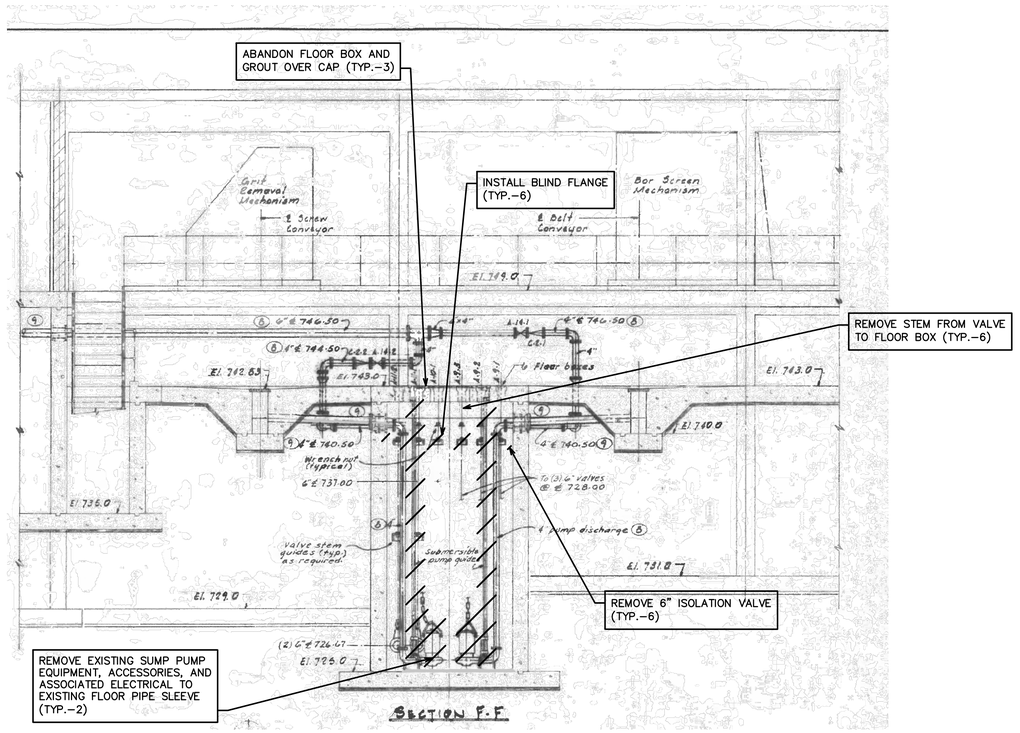

NORTH GARAGE SUMP PUMP DEMOLITION

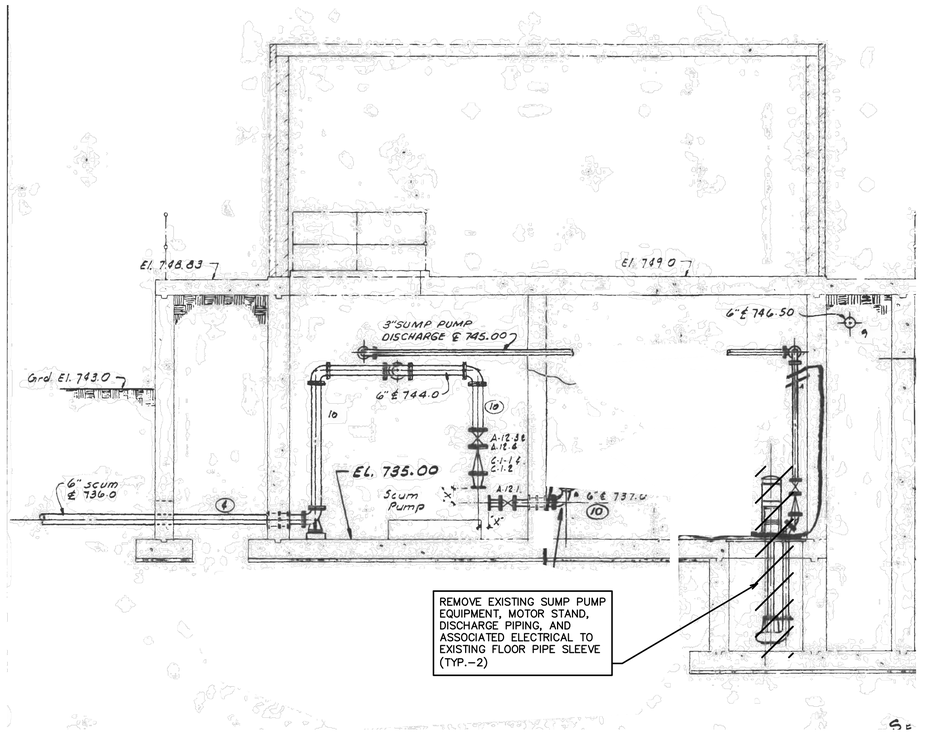

LOWER ALCOVE AREA SUMP PUMP DEMOLITION

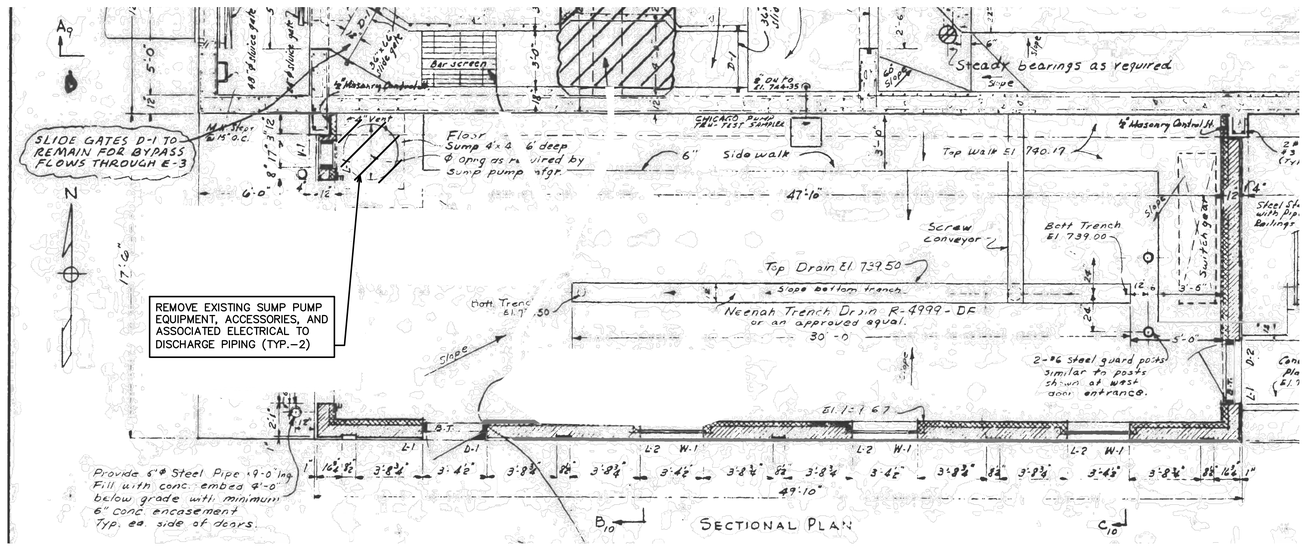

LOWER ALCOVE AREA SUMP PUMP DEMOLITION

NOTE:

THIS DRAWING HAS BEEN COPIED FROM A PREVIOUS CONSTRUCTION PROJECT AND IS PROVIDED FOR INFORMATION ONLY. THIS DRAWING HAS BEEN REDUCED AND IS THEREFORE NOT TO SCALE. NO GUARANTEE IS MADE, OR SHOULD BE ASSUMED, AS TO THE COMPLETENESS OR ACCURACY OF THE INFORMATION SHOWN ON THIS DRAWING. PARTIES UTILIZING THIS INFORMATION SHALL FIELD VERIFY THE ACCURACY AND COMPLETENESS PRIOR TO CONSTRUCTION ACTIVITIES.

811 Know what's below. Call before you dig.

REV.	DESCRIPTION	DATE	DRAWN	CHECKED
	ISSUED FOR BIDS SET	12–13–2021		
	90% DESIGN SUBMITTAL	11–22–2021		
	70% DESIGN SUBMITTAL	10–29–2021		
	50% DESIGN SUBMITTAL	10–01–2021		

CITY OF ANN ARBOR
PUBLIC SERVICES
301 E. HURON STREET
P.O. BOX 8647
ANN ARBOR, MI 48107-8647
(734) 794-6410
www.a2gov.org

PROJECT MANAGEMENT - PUBLIC SERVICES - CITY OF ANN ARBOR

HEADWORKS IMPROVEMENTS PROJECT
HEADWORKS EXISTING SUMP PUMP DEMOLITION

SCALE N.T.S.

DRAWING No. 136

SHEET No. DP–04

NOTE:

THIS DRAWING HAS BEEN COPIED FROM A PREVIOUS CONSTRUCTION PROJECT AND IS PROVIDED FOR INFORMATION ONLY. THIS DRAWING HAS BEEN REDUCED AND IS THEREFORE NOT TO SCALE. NO GUARANTEE IS MADE, OR SHOULD BE ASSUMED, AS TO THE COMPLETENESS OR ACCURACY OF THE INFORMATION SHOWN ON THIS DRAWING. PARTIES UTILIZING THIS INFORMATION SHALL FIELD VERIFY THE ACCURACY AND COMPLETENESS PRIOR TO CONSTRUCTION ACTIVITIES. EXISTING DRAWINGS WERE TAKEN FROM CITY OF ANN ARBOR WWTP MINOR RESIDUALS IMPROVEMENTS PROJECT, 2003.



PHOTO 1 – NORTH GRIT CHAMBER



PHOTO 2 – GRIT SNAIL SLURRY CUP

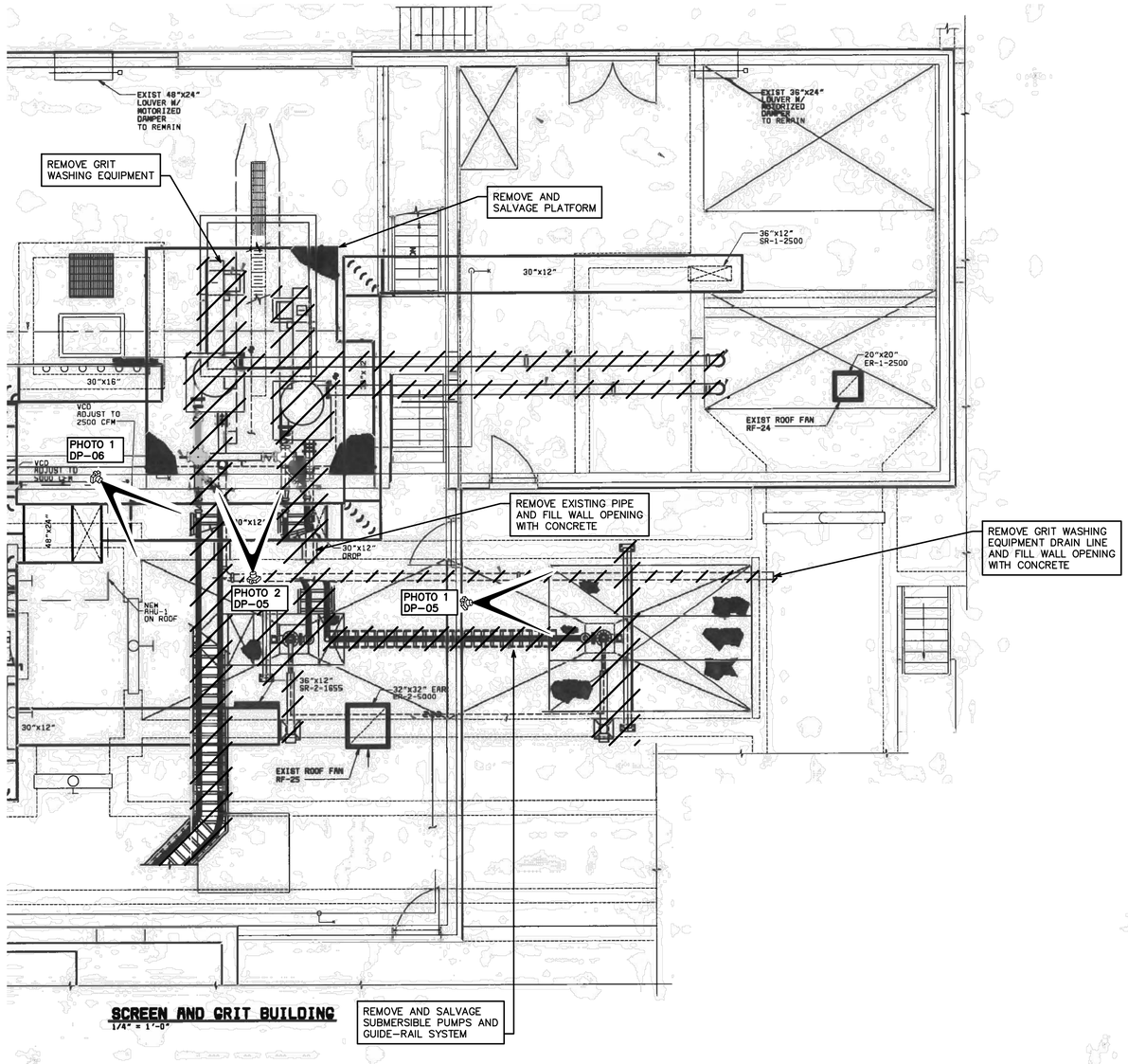

Know what's below. Call before you dig. 811

REV.	DESCRIPTION	DATE	DRAWN	CHECKED
	ISSUED FOR BIDS SET	12-13-2021		
	90% DESIGN SUBMITTAL	11-22-2021		
	70% DESIGN SUBMITTAL	10-29-2021		
	50% DESIGN SUBMITTAL	10-01-2021		

CITY OF ANN ARBOR
PUBLIC SERVICES
301 EAST HURON STREET
P.O. BOX 8647
ANN ARBOR, MI 48107-8647
734-794-6410
www.a2gov.org

PROJECT MANAGEMENT - PUBLIC SERVICES - CITY OF ANN ARBOR

HEADWORKS IMPROVEMENTS PROJECT

NORTH GRIT CHAMBER DEMOLITION PLAN

SCALE N.T.S.

DRAWING No. 138

SHEET No.

DP-05

NOTE:

THIS DRAWING HAS BEEN COPIED FROM A PREVIOUS CONSTRUCTION PROJECT AND IS PROVIDED FOR INFORMATION ONLY. THIS DRAWING HAS BEEN REDUCED AND IS THEREFORE NOT TO SCALE. NO GUARANTEE IS MADE, OR SHOULD BE ASSUMED, AS TO THE COMPLETENESS OR ACCURACY OF THE INFORMATION SHOWN ON THIS DRAWING. PARTIES UTILIZING THIS INFORMATION SHALL FIELD VERIFY THE ACCURACY AND COMPLETENESS PRIOR TO CONSTRUCTION ACTIVITIES. EXISTING DRAWINGS WERE TAKEN FROM CITY OF ANN ARBOR WWTP MINOR RESIDUALS IMPROVEMENTS PROJECT, 2003.

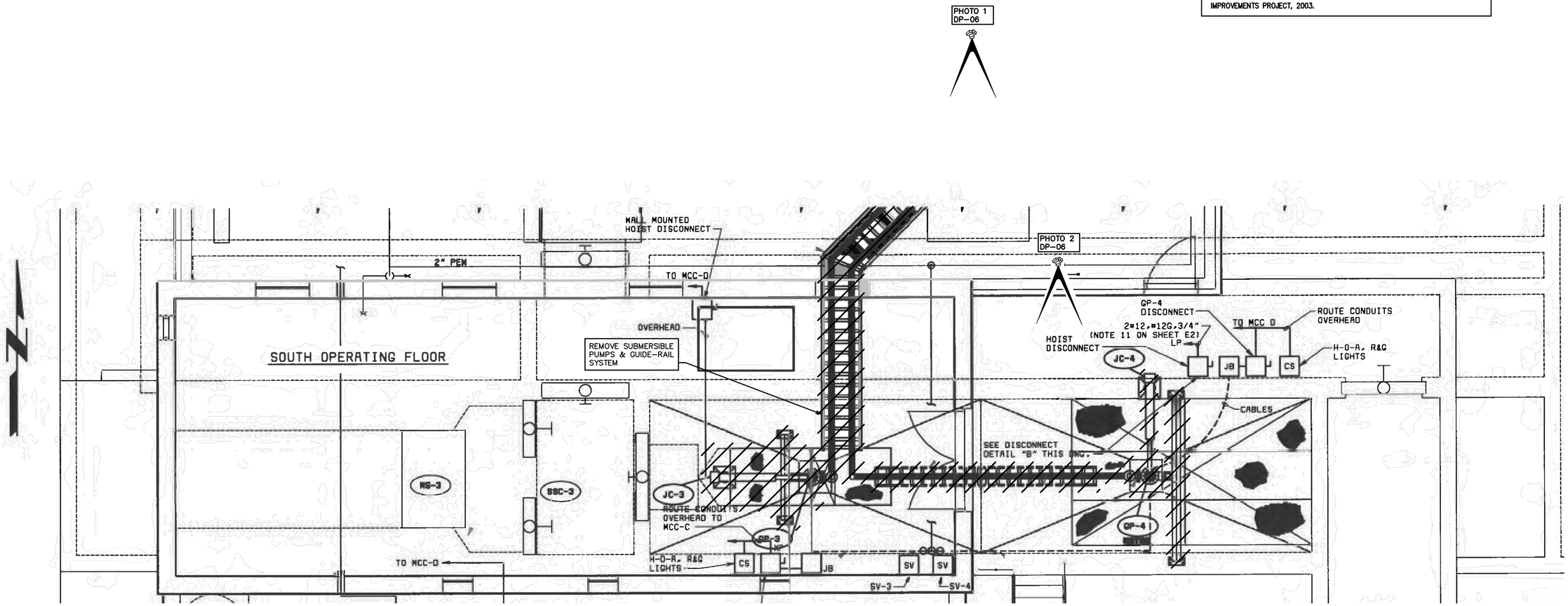



PHOTO 1 – GRIT PIPING



PHOTO 2 – SOUTH GRIT CHAMBER

811 Know what's below. Call before you dig.

REV.	DESCRIPTION	DATE	DRAWN	CHECKED
	ISSUED FOR BIDS SET	12-13-2021		
	90% DESIGN SUBMITTAL	11-22-2021		
	70% DESIGN SUBMITTAL	10-29-2021		
	50% DESIGN SUBMITTAL	10-01-2021		

CITY OF ANN ARBOR
PUBLIC SERVICES
301 EAST HURON STREET
P.O. BOX 8647
ANN ARBOR, MI 48107-8647
734-794-6410
www.a2gov.org

PROJECT MANAGEMENT - PUBLIC SERVICES - CITY OF ANN ARBOR

HEADWORKS IMPROVEMENTS PROJECT

SOUTH GRIT CHAMBER DEMOLITION PLAN

SCALE N.T.S.

DRAWING No. 140

SHEET No. DP-06

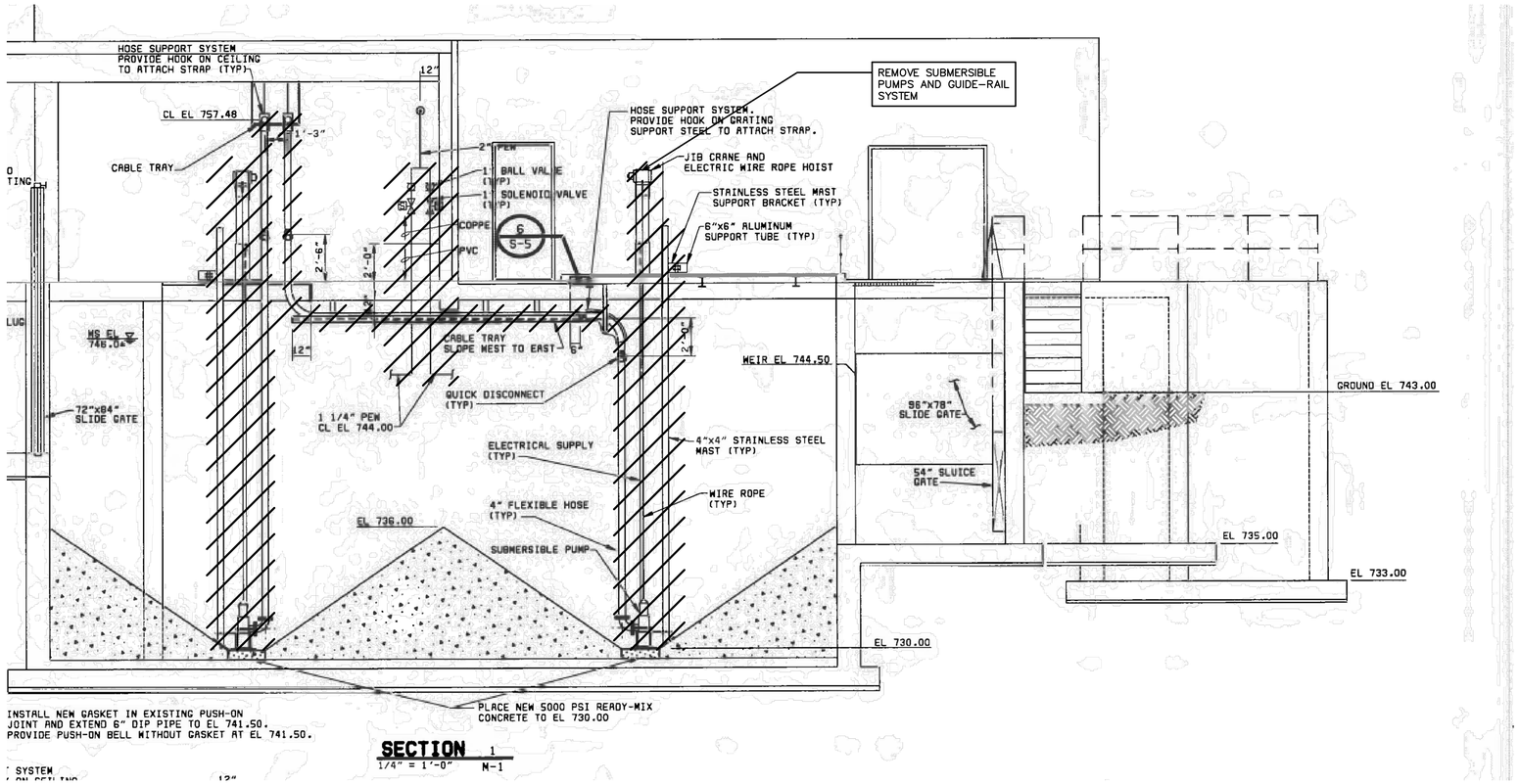

SECTION 1
1/4" = 1'-0" M-1

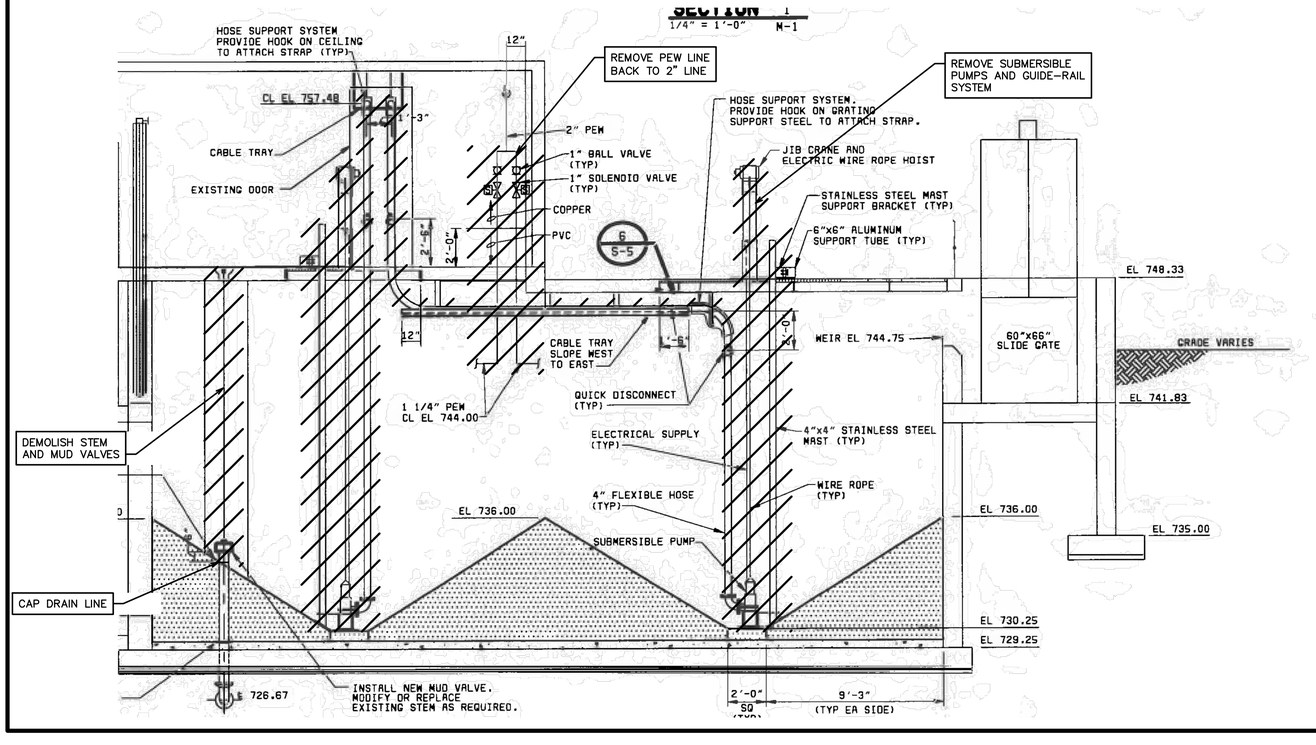

SECTION 1
1/4" = 1'-0" M-1

NOTE:

THIS DRAWING HAS BEEN COPIED FROM A PREVIOUS CONSTRUCTION PROJECT AND IS PROVIDED FOR INFORMATION ONLY. THIS DRAWING HAS BEEN REDUCED AND IS THEREFORE NOT TO SCALE. NO GUARANTEE IS MADE, OR SHOULD BE ASSUMED. AS TO THE COMPLETENESS OR ACCURACY OF THE INFORMATION SHOWN ON THIS DRAWING. PARTIES UTILIZING THIS INFORMATION SHALL FIELD VERIFY THE ACCURACY AND COMPLETENESS PRIOR TO CONSTRUCTION ACTIVITIES. EXISTING DRAWINGS WERE TAKEN FROM CITY OF ANN ARBOR WWTP MINOR RESIDUALS IMPROVEMENTS PROJECT, 2003.

811 Know what's below. Call before you dig.

REV.	DESCRIPTION	DATE	DRAWN	CHECKED
	50% DESIGN SUBMITTAL	10-01-2021		
	70% DESIGN SUBMITTAL	10-29-2021		
	90% DESIGN SUBMITTAL	11-22-2021		
	ISSUED FOR BIDS SET	12-13-2021		

CITY OF ANN ARBOR
PUBLIC SERVICES
301 E. HURON STREET
P.O. BOX 8647
ANN ARBOR, MI 48107-8647
734.794.6410
www.a2gov.org

PROJECT MANAGEMENT - PUBLIC SERVICES - CITY OF ANN ARBOR

HEADWORKS IMPROVEMENTS PROJECT

GRIT CHAMBER DEMOLITION SECTIONS

SCALE N.T.S.

DRAWING No. 142

SHEET No.

DP-07

NOTES:
1. EXHAUST FANS SHALL BE REMOVED IN OPERABLE CONDITION AND OFFERED TO OWNER

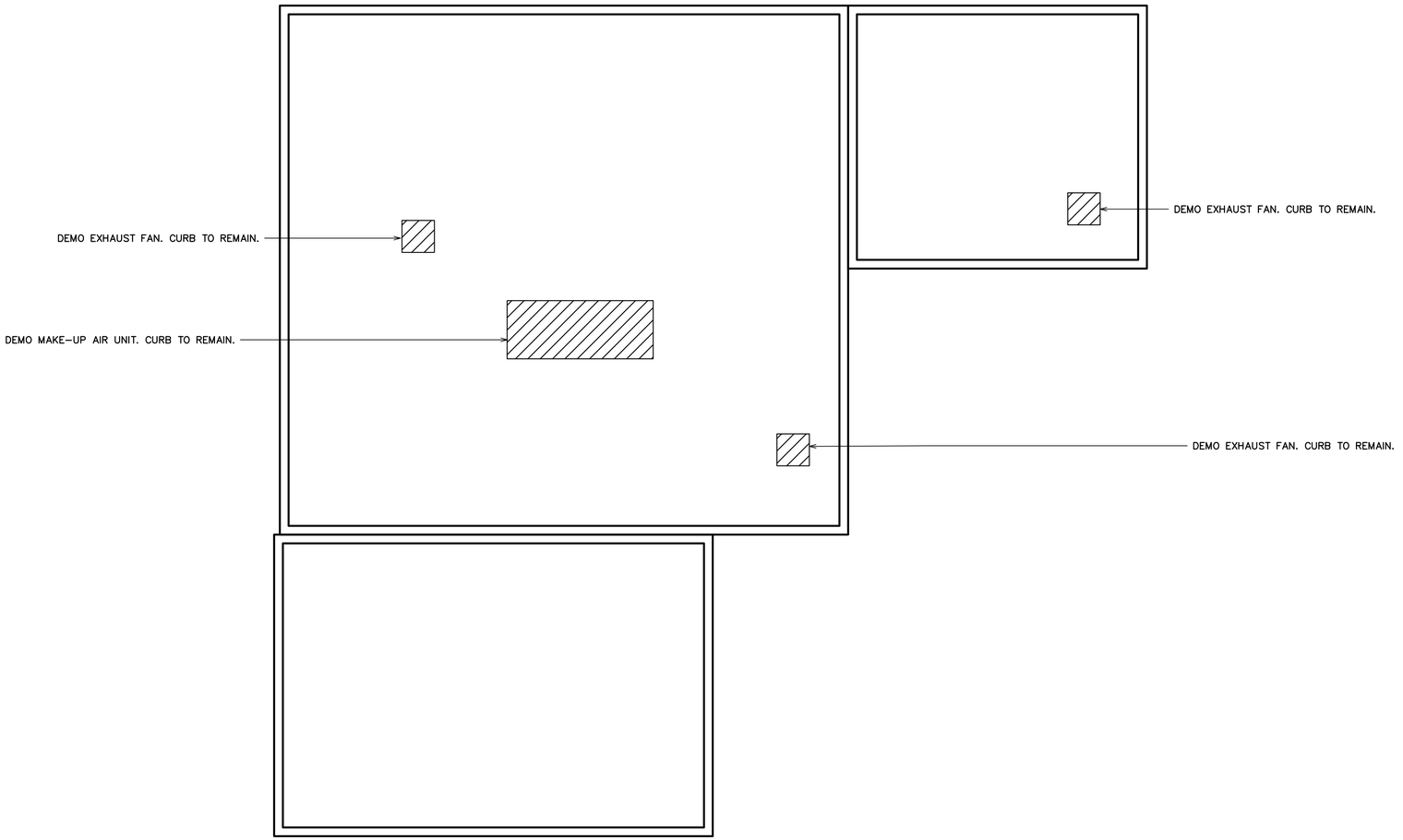

HVAC DEMOLITION PLAN

N

Know what's **below.** **Call before you dig.**

REV.	DESCRIPTION	DATE	DRAWN	CHECKED
	50% DESIGN SUBMITTAL	10-01-2021		
	70% DESIGN SUBMITTAL	10-29-2021		
	90% DESIGN SUBMITTAL	11-22-2021		
	ISSUED FOR BIDS SET	12-13-2021		

CITY OF ANN ARBOR
PUBLIC SERVICES
301 EAST HURON STREET
P.O. BOX 8647
ANN ARBOR, MI 48107-8647
734-794-6410
www.a2gov.org

PROJECT MANAGEMENT - PUBLIC SERVICES - CITY OF ANN ARBOR

HEADWORKS IMPROVEMENTS PROJECT

HVAC DEMOLITION PLAN

SCALE N.T.S.

DRAWING No. 150

SHEET No. DM-01

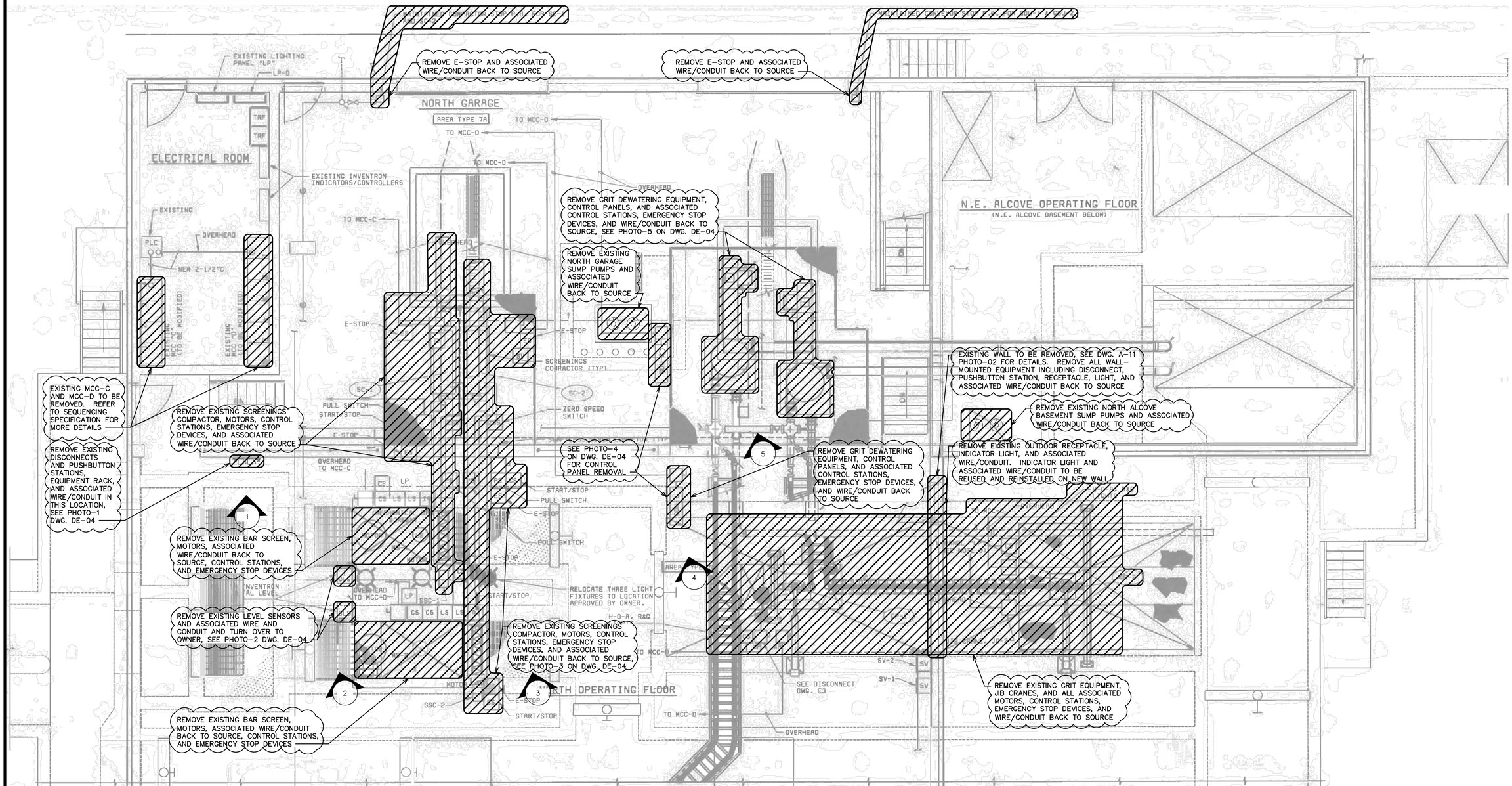

NORTH HEADWORKS BUILDING
SCREENING AND GRIT EQUIPMENT
ELECTRICAL DEMOLITION PLAN

N

X
DENOTES GENERAL LOCATION OF PHOTO, SEE SHEET DE-04

NOTICE:

THIS DRAWING HAS BEEN COPIED FROM A PREVIOUS CONSTRUCTION PROJECT. NO GUARANTEE IS MADE, OR SHOULD BE ASSUMED AS TO THE COMPLETENESS OR ACCURACY OF THE INFORMATION SHOWN ON THIS DRAWING. PARTIES UTILIZING THIS INFORMATION SHALL FIELD VERIFY THE ACCURACY AND COMPLETENESS PRIOR TO CONSTRUCTION/DEMOLITION ACTIVITIES. WORK ITEMS ON THIS DRAWING ARE SHOWN THUS "(WORK)". THIS DRAWING IS NOT TO SCALE. THE DEMO WORK SHOWN ON THESE DRAWINGS IS MEANT TO BE INCLUSIVE OF ALL DEMO WORK REQUIRED IN THE PARTICULAR AREA NOTED. HOWEVER, REFERENCE SHOULD ALSO BE MADE TO THE PROPOSED DRAWINGS. IF ADDITIONAL DEMO WORK IS REQUIRED TO INSTALL THE PROPOSED WORK, IT SHALL BE DONE AS REQUIRED TO PERFORM THE WORK. IN SOME CASES, NOT ALL OF THE EXISTING ITEMS TO BE REMOVED ARE SHOWN ON THE ORIGINAL DRAWINGS.

811 Know what's below. Call before you dig.

REV.	DESCRIPTION	DATE	DRAWN	CHECKED
	50% DESIGN SUBMITTAL	10-01-2021		
	70% DESIGN SUBMITTAL	10-29-2021		
	90% DESIGN SUBMITTAL	11-22-2021		
	ISSUED FOR BIDS SET	12-13-2021		

CITY OF ANN ARBOR
PUBLIC SERVICES
301 E. HURON STREET
P.O. BOX 8647
ANN ARBOR, MI 48107-8647
(734) 794-6410
www.a2gov.org

PROJECT MANAGEMENT - PUBLIC SERVICES - CITY OF ANN ARBOR

HEADWORKS IMPROVEMENTS PROJECT
NORTH HEADWORKS BUILDING
SCREENING AND GRIT EQUIPMENT
ELECTRICAL DEMOLITION PLAN

SCALE NO SCALE
DRAWING No. 160
SHEET No. DE-01

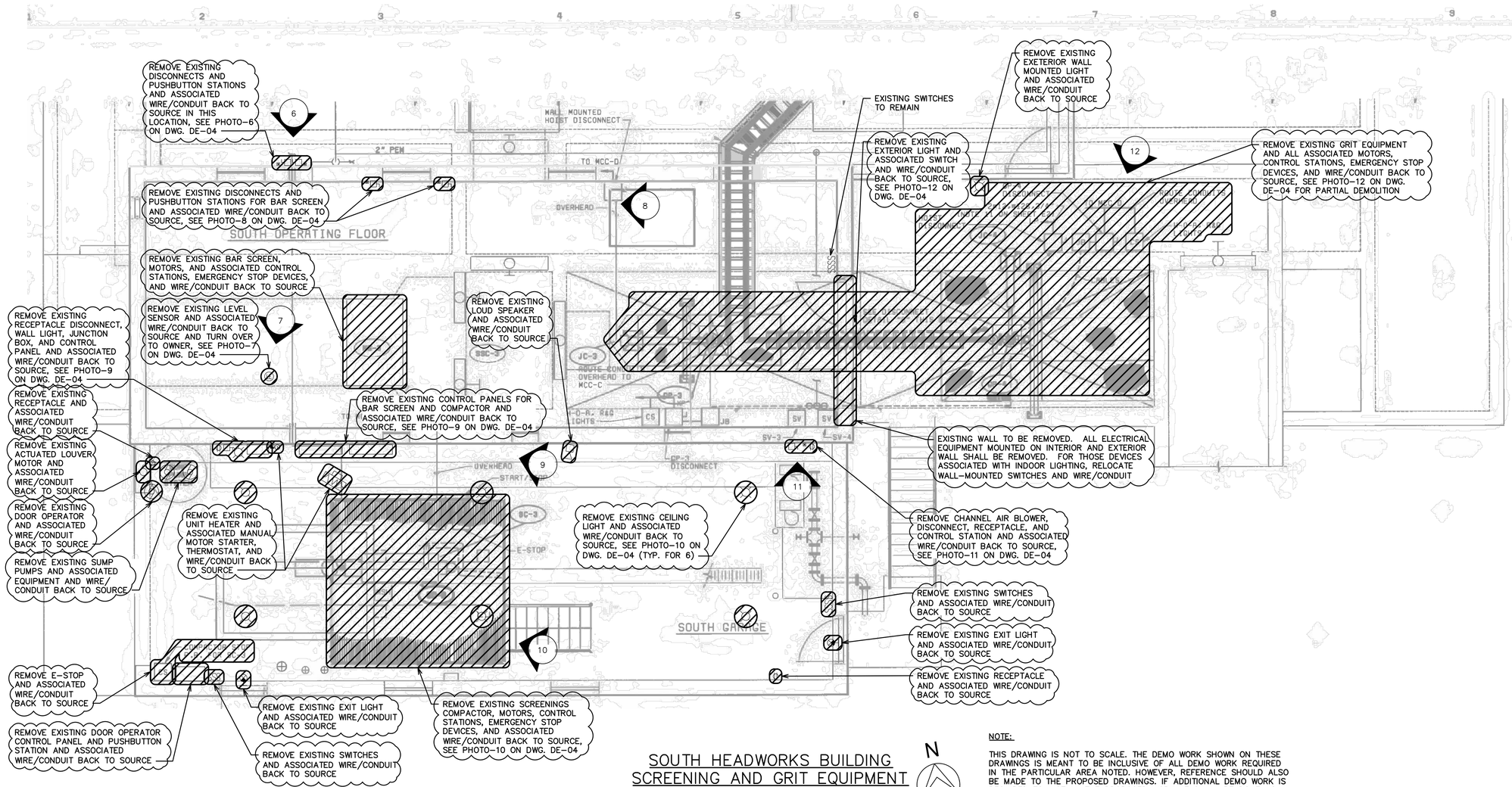

SOUTH HEADWORKS BUILDING SCREENING AND GRIT EQUIPMENT ELECTRICAL DEMOLITION PLAN

N

NOTE:

THIS DRAWING IS NOT TO SCALE. THE DEMO WORK SHOWN ON THESE DRAWINGS IS MEANT TO BE INCLUSIVE OF ALL DEMO WORK REQUIRED IN THE PARTICULAR AREA NOTED. HOWEVER, REFERENCE SHOULD ALSO BE MADE TO THE PROPOSED DRAWINGS. IF ADDITIONAL DEMO WORK IS REQUIRED TO INSTALL THE PROPOSED WORK, IT SHALL BE DONE AS REQUIRED TO PERFORM THE WORK. IN SOME CASES, NOT ALL OF THE EXISTING ITEMS TO BE REMOVED ARE SHOWN ON THE ORIGINAL DRAWINGS.

X

DENOTES GENERAL LOCATION OF PHOTO, SEE SHEET DE-04

NOTICE:

THIS DRAWING HAS BEEN COPIED FROM A PREVIOUS CONSTRUCTION PROJECT. NO GUARANTEE IS MADE, OR SHOULD BE ASSUMED AS TO THE COMPLETENESS OR ACCURACY OF THE INFORMATION SHOWN ON THIS DRAWING. PARTIES UTILIZING THIS INFORMATION SHALL FIELD VERIFY THE ACCURACY AND COMPLETENESS PRIOR TO CONSTRUCTION/DEMOLITION ACTIVITIES. WORK ITEMS ON THIS DRAWING ARE SHOWN THUS "~~~".

811 Know what's below. Call before you dig.

REV.	DESCRIPTION	DATE	DRAWN	CHECKED
	ISSUED FOR BIDS SET	12-13-2021		
	90% DESIGN SUBMITTAL	11-22-2021		
	70% DESIGN SUBMITTAL	10-29-2021		
	50% DESIGN SUBMITTAL	10-01-2021		

CITY OF ANN ARBOR
PUBLIC SERVICES
301 E. HURON STREET
P.O. BOX 8647
ANN ARBOR, MI 48107-8647
734.794.6410
www.a2gov.org

PROJECT MANAGEMENT - PUBLIC SERVICES - CITY OF ANN ARBOR

HEADWORKS IMPROVEMENTS PROJECT
SOUTH HEADWORKS BUILDING
SCREENING AND GRIT EQUIPMENT
ELECTRICAL DEMOLITION PLAN

SCALE NO SCALE

DRAWING No. 162

SHEET No. DE-02

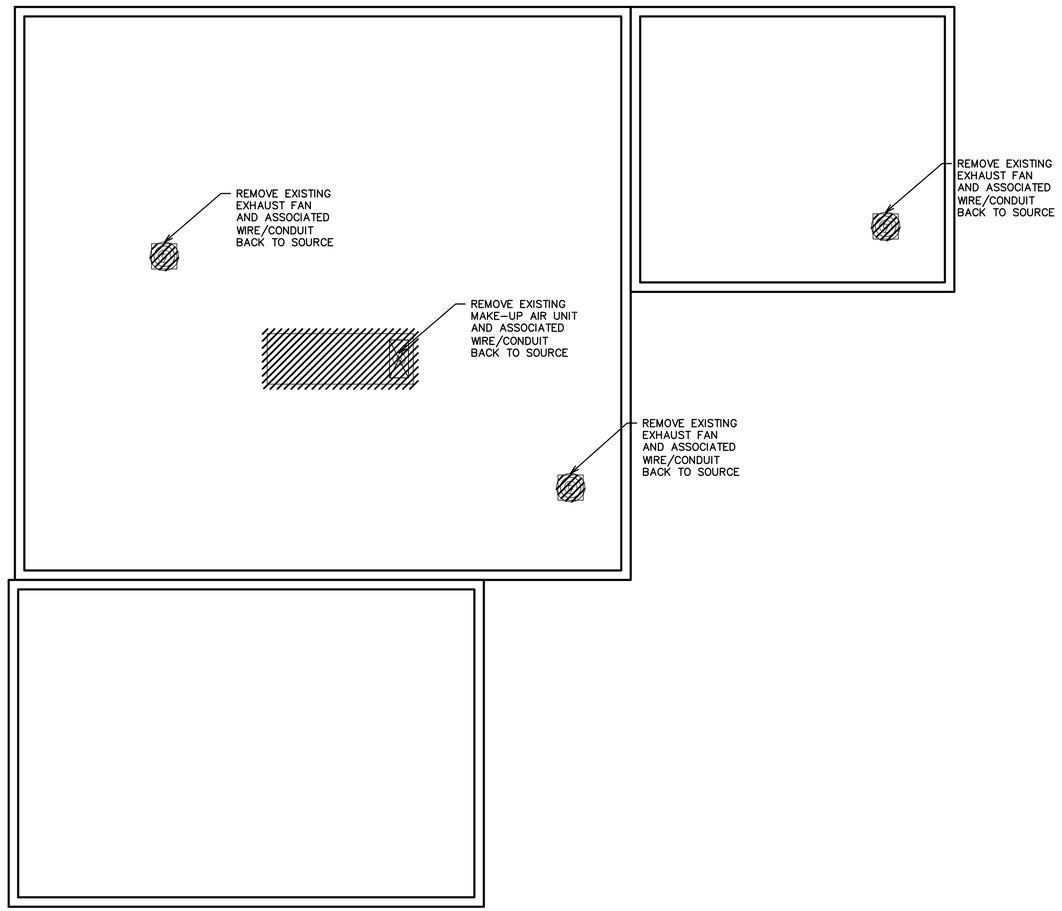

HEADWORKS BUILDING ROOF
ELECTRICAL DEMOLITION PLAN

N

0 2 4 8 16
SCALE IN FEET

FOR TRUE SCALE PLOT THIS SHEET TO 34" X 22" PAPER SIZE

811 Know what's **below.** **Call** before you dig.

REV.	DESCRIPTION	DATE	DRAWN	CHECKED
	ISSUED FOR BIDS SET	12-13-2021		
	90% DESIGN SUBMITTAL	11-22-2021		
	70% DESIGN SUBMITTAL	10-29-2021		
	50% DESIGN SUBMITTAL	10-01-2021		

CITY OF ANN ARBOR
PUBLIC SERVICES
301 EAST HURON STREET
P.O. BOX 8647
ANN ARBOR, MI 48107-8647
734-794-6410
www.a2gov.org

PROJECT MANAGEMENT - PUBLIC SERVICES - CITY OF ANN ARBOR

HEADWORKS IMPROVEMENTS PROJECT
HEADWORKS BUILDING ROOF
ELECTRICAL DEMOLITION PLAN

SCALE 1/8" = 1'-0"

DRAWING No. 164

SHEET No. DE-03



PHOTO–1



PHOTO–2



PHOTO–3

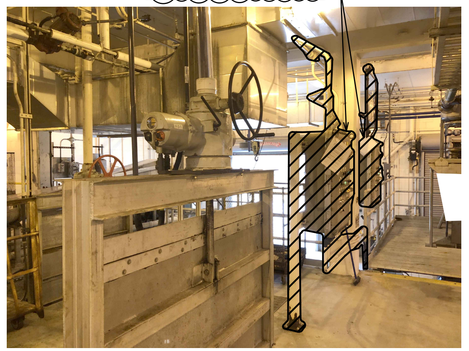

PHOTO–4

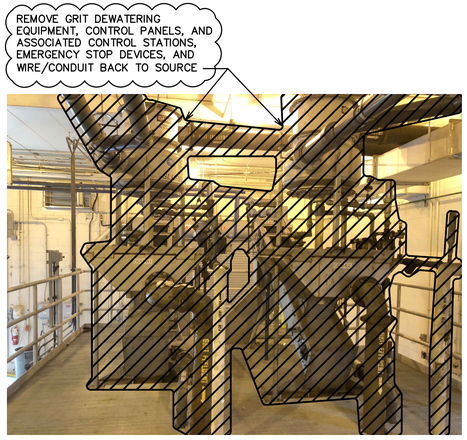

PHOTO–5



PHOTO–6

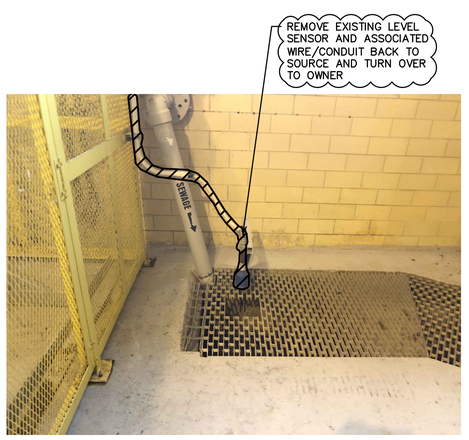

PHOTO–7



PHOTO–8



PHOTO–9



PHOTO–10

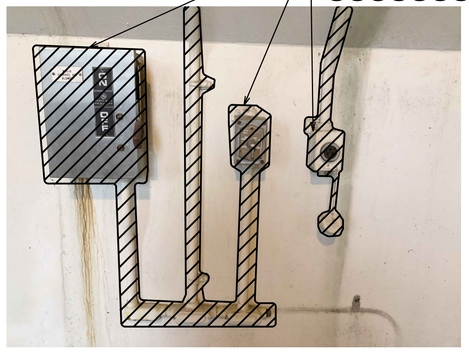

PHOTO–11



PHOTO–12

811 Know what's **below.** **Call** before you dig.

REV.	DESCRIPTION	DATE	DRAWN	CHECKED
	ISSUED FOR BIDS SET	12–13–2021		
	90% DESIGN SUBMITTAL	11–22–2021		
	70% DESIGN SUBMITTAL	10–29–2021		
	50% DESIGN SUBMITTAL	10–01–2021		

CITY OF ANN ARBOR
PUBLIC SERVICES
301 E. HURON STREET
P.O. BOX 8647
ANN ARBOR, MI 48107-8647
734.794.6410
www.a2gov.org

PROJECT MANAGEMENT - PUBLIC SERVICES - CITY OF ANN ARBOR

HEADWORKS IMPROVEMENTS PROJECT

HEADWORKS BUILDING
ELECTRICAL DEMOLITION PHOTOS

SCALE: NO SCALE

DRAWING No. 166

SHEET No. DE–04

UTILITY & CIVIL LEGEND

RO	EXISTING RO PIPE
ST	EXISTING STORM SEWER
SAN SAN	EXISTING SANITARY SEWER
SEW	EXISTING SEW PIPE
WM	EXISTING WATER MAIN
PEW	EXISTING PEW PIPE
G G G G	EXISTING GAS MAIN
E E E E	EXISTING ELECTRICAL UNDERGROUND
P	EXISTING ELECTRICAL PRIMARY
S	EXISTING ELECTRICAL SECONDARY
O/H	EXISTING OVERHEAD LINE
X X X X	EXISTING FENCE
HWS/HWR	EXISTING HWS/HWR
WAS	EXISTING WAS
	EXISTING BUILDING
	EXISTING ASPHALT PAVEMENT
	EXISTING CONCRETE AREA
	EXISTING GRATING AREA
	EXISTING STORM MANHOLE
	EXISTING STORM CATCH BASINS
	EXISTING DRAIN CLEAN OUT
	EXISTING STORM OUTLET
	EXISTING SANITARY MANHOLE
	EXISTING WATER MAIN HYDRANT
	EXISTING WATER MAIN GATE VALVE & WELL
	EXISTING ELECTRICAL MANHOLE
	EXISTING ELECTRICAL LIGHT POLE
	EXISTING GAS VALVE
	EXISTING SFE HYDRANT
	TRAVERSE LINE & TRAVERSE POINT
	BENCH MARK SYMBOL
	PARKING BOLLARD

CONCRETE PAVEMENT AND SIDEWALK REPLACEMENT CONSTRUCTION NOTES:

1. WORK SHALL BE IN ACCORDANCE WITH THE MDOT 2012 STANDARD SPECIFICATIONS FOR CONSTRUCTION EXCEPT AS NOTED ON THE DRAWINGS AND PROJECT SPECIFICATIONS.
2. CONTRACTOR SHALL PROVIDE ALL STAKING TO ALLOW INSTALLATION OF PAVEMENT AND SIDEWALKS AS SHOWN ON THE PLANS, OR AS DIRECTED BY THE ENGINEER.
3. CONTRACTOR SHALL COORDINATE WITH ENGINEER TO CONFIRM ALL PAVEMENT GRADES PRIOR TO PLACEMENT OF NEW CONCRETE.
4. PROVIDE AND COORDINATE WITH OWNER ALL NECESSARY TRAFFIC CONTROL DEVICES AND SEQUENCING TO RE-ROUTE TRAFFIC AROUND WORK AREAS.
5. CONTRACTOR SHALL SUBMIT A PAVEMENT AND SIDEWALK SEQUENCING PLAN FOR THE OWNER'S APPROVAL.
6. ACCESS THROUGHOUT THE PLANT MUST BE MAINTAINED AT ALL TIMES.
7. CONTRACTOR SHALL PROVIDE MAINTENANCE AGGREGATE FILL MDOT 21AA, 12" MINIMUM DEPTH IN ALL REMOVED PAVEMENT AREAS UNTIL NEW PAVEMENT IS PLACED TO MAINTAIN VEHICULAR ACCESS TO ALL AREAS OF THE PLANT FOR THE OWNER.
8. LIQUID CURING COMPOUND FOR CURING OF EXTERIOR PAVING, SIDEWALKS AND SLABS SHALL CONFORM TO AASHTO-M148, EXCEPT MOISTURE RETENTION SHALL BE 93% INSTEAD OF 90% WHITE PIGMENTED TYPE SHALL BE USED FOR AREAS EXPOSED TO THE SUN AND CLEAR TO TRANSLUCENT TYPE SHALL BE USED IN ALL OTHER LOCATIONS. COMPOUND SHALL BE APPLIED IN A UNIFORM, CONTINUOUS FILM, WITH PRESSURE SPRAYER EQUIPMENT, AT THE RATE OF NO LESS THAT ONE GALLON FOR 200 SQUARE FEET OF SURFACE, APPLIED IN TWO COATS. THE SECOND APPLICATION SHALL FOLLOW THE FIRST WITHIN 30 MINUTES.
9. PROVIDE SIDEWALK JOINTS AS SHOWN ON THE PLANS AND SPECIFICATIONS. JOINT TYPES AND LOCATIONS SHALL BE CONFIRMED WITH THE ENGINEER PRIOR TO PLACING.

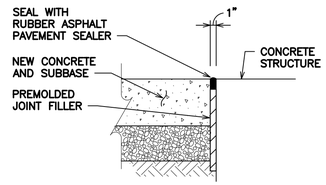

ISOLATION JOINT AT STRUCTURE

NO SCALE

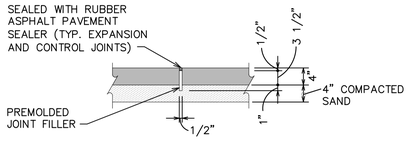

SIDEWALK EXPANSION JOINT DETAIL – E

NO SCALE

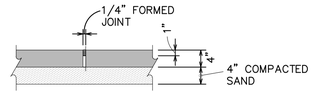

SIDEWALK CONTROL JOINT DETAIL – C

NO SCALE

SIDEWALK NOTES:

1. PROVIDE 4" MIN. MDOT CLASS 2 SAND BEDDING.
2. PROVIDE EXPANSION JOINTS MAX. 50' O.C. AND PROVIDE EXPANSION JOINTS BETWEEN SIDEWALK AND FACE OF STRUCTURES AND BETWEEN SIDEWALK AND ROADWAY BACK OF CURB.
3. PROVIDE CONTROL JOINTS MAX. 6' O.C.
4. SIDEWALK AND DRIVEWAY APPROACHES SHALL ADHERE TO MDOT STANDARD DETAIL R-29-I.

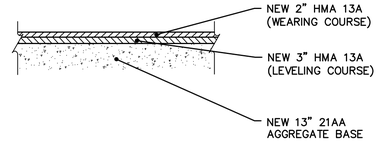

PROPOSED BITUMINOUS PAVEMENT CROSS SECTION

NO SCALE

Know what's below. Call before you dig. 811

REV.	DESCRIPTION	DATE	DRAWN	CHECKED
	ISSUED FOR BIDS SET	12-13-2021		
	90% DESIGN SUBMITTAL	11-22-2021		
	70% DESIGN SUBMITTAL	10-29-2021		
	50% DESIGN SUBMITTAL	10-01-2021		

CITY OF ANN ARBOR
PUBLIC SERVICES
301 EAST HURON STREET
P.O. BOX 8647
ANN ARBOR, MI 48107-8647
(734) 794-6410
www.a2gov.org

PROJECT MANAGEMENT - PUBLIC SERVICES - CITY OF ANN ARBOR

HEADWORKS IMPROVEMENTS PROJECT

CIVIL LEGEND, NOTES AND DETAILS

SCALE N.T.S.

DRAWING No. 200

SHEET No. C-01

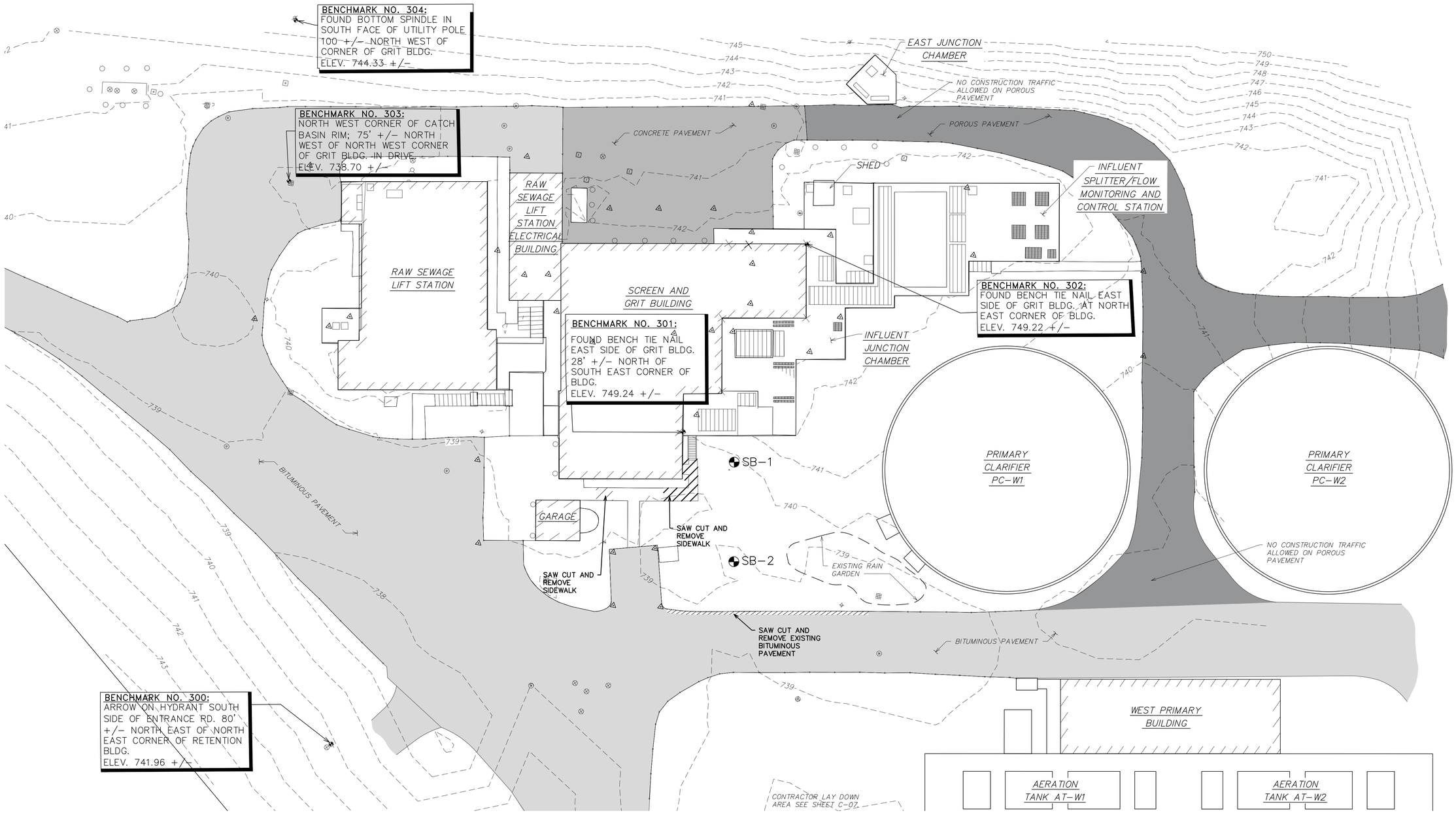

EXISTING SITE PLAN
SCALE: 1" =20'

NOTICE:
ALL EXISTING UTILITIES SHOWN ON THIS TOPOGRAPHIC SURVEY HAVE BEEN TAKEN FROM VISUAL OBSERVATION, AND RECORD MAPPING WHERE AVAILABLE. NO GUARANTEE IS MADE, OR SHOULD BE ASSUMED, AS TO THE COMPLETENESS OR ACCURACY OF THE UTILITIES SHOWN ON THIS DRAWING. PARTIES UTILIZING THIS INFORMATION SHALL FIELD VERIFY THE ACCURACY AND COMPLETENESS PRIOR TO CONSTRUCTION ACTIVITIES.

0 5 10 20 40
SCALE IN FEET

FOR TRUE SCALE PLOT THIS SHEET TO 34" X 22" PAPER SIZE

811 Know what's below. Call before you dig.

REV.	DESCRIPTION	DATE	DRAWN	CHECKED
	ISSUED FOR BIDS SET	12-13-2021		
	90% DESIGN SUBMITTAL	11-22-2021		
	70% DESIGN SUBMITTAL	10-29-2021		
	50% DESIGN SUBMITTAL	10-01-2021		

CITY OF ANN ARBOR
PUBLIC SERVICES
301 E. HURON STREET
P.O. BOX 8647
ANN ARBOR, MI 48107-8647
734.794.6410
www.a2gov.org

PROJECT MANAGEMENT - PUBLIC SERVICES - CITY OF ANN ARBOR

HEADWORKS IMPROVEMENTS PROJECT
EXISTING SITE GRADING

SCALE 1"=20'
DRAWING No. 202
SHEET No. C-02

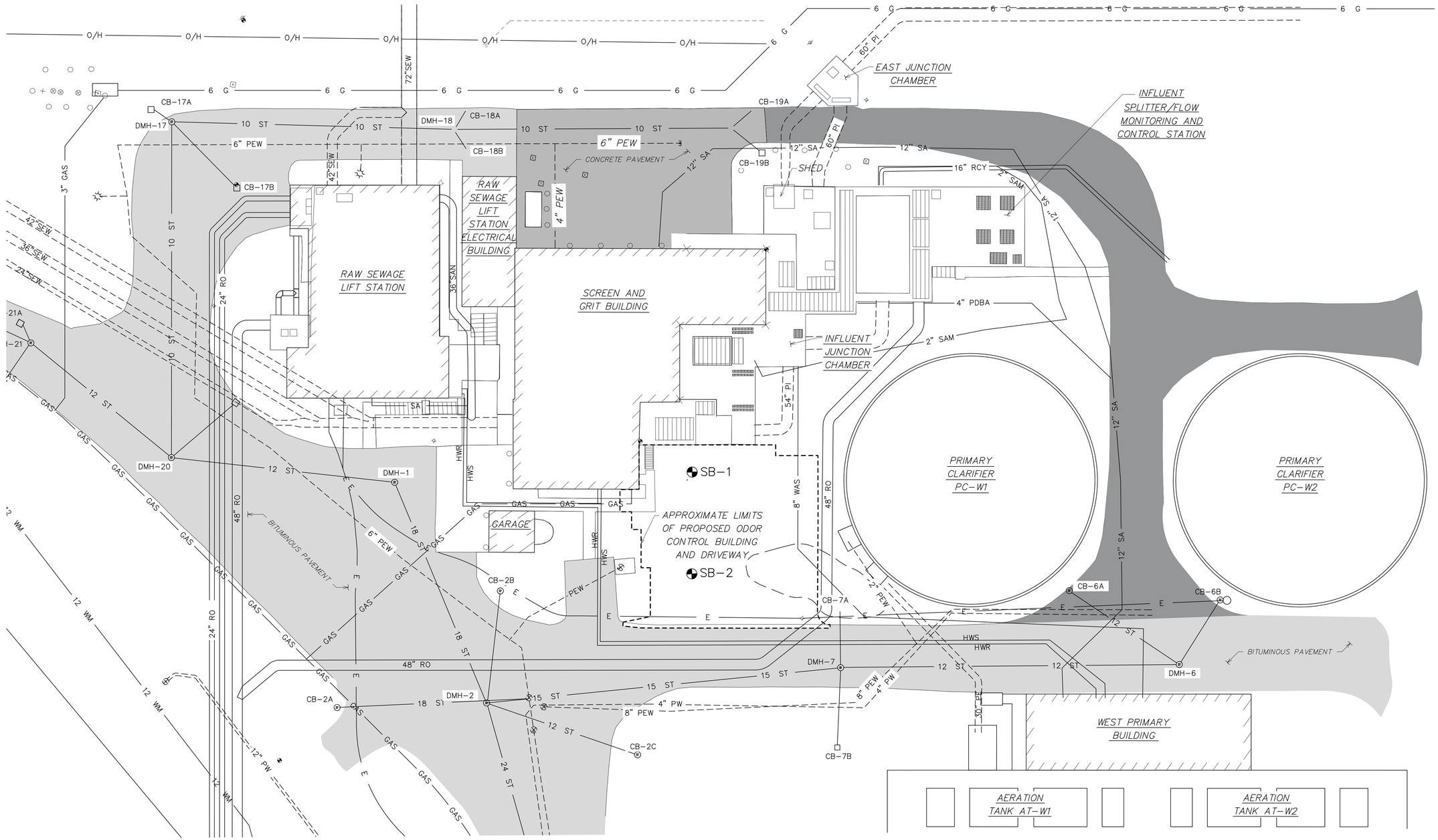

EXISTING UTILITY PLAN

SCALE: 1" =20'

N

NOTICE:

ALL EXISTING UTILITIES SHOWN ON THIS TOPOGRAPHIC SURVEY HAVE BEEN TAKEN FROM VISUAL OBSERVATION, AND RECORD MAPPING WHERE AVAILABLE. NO GUARANTEE IS MADE, OR SHOULD BE ASSUMED, AS TO THE COMPLETENESS OR ACCURACY OF THE UTILITIES SHOWN ON THIS DRAWING. PARTIES UTILIZING THIS INFORMATION SHALL FIELD VERIFY THE ACCURACY AND COMPLETENESS PRIOR TO CONSTRUCTION ACTIVITIES.

0 5 10 20 40

SCALE IN FEET

FOR TRUE SCALE PLOT THIS SHEET TO 34" X 22" PAPER SIZE

811 Know what's **below.** **Call** before you dig.

REV.	DESCRIPTION	DATE	DRAWN	CHECKED
	ISSUED FOR BIDS SET	12-13-2021		
	90% DESIGN SUBMITTAL	11-22-2021		
	70% DESIGN SUBMITTAL	10-29-2021		
	50% DESIGN SUBMITTAL	10-01-2021		

CITY OF ANN ARBOR
PUBLIC SERVICES
301 EAST HURON STREET
P.O. BOX 8647
ANN ARBOR, MI 48107-8647
(734) 794-6410
www.a2gov.org

PROJECT MANAGEMENT - PUBLIC SERVICES - CITY OF ANN ARBOR

HEADWORKS IMPROVEMENTS PROJECT

EXISTING UTILITIES PLAN

SCALE 1"=20'

DRAWING No. 204

SHEET No. C-03

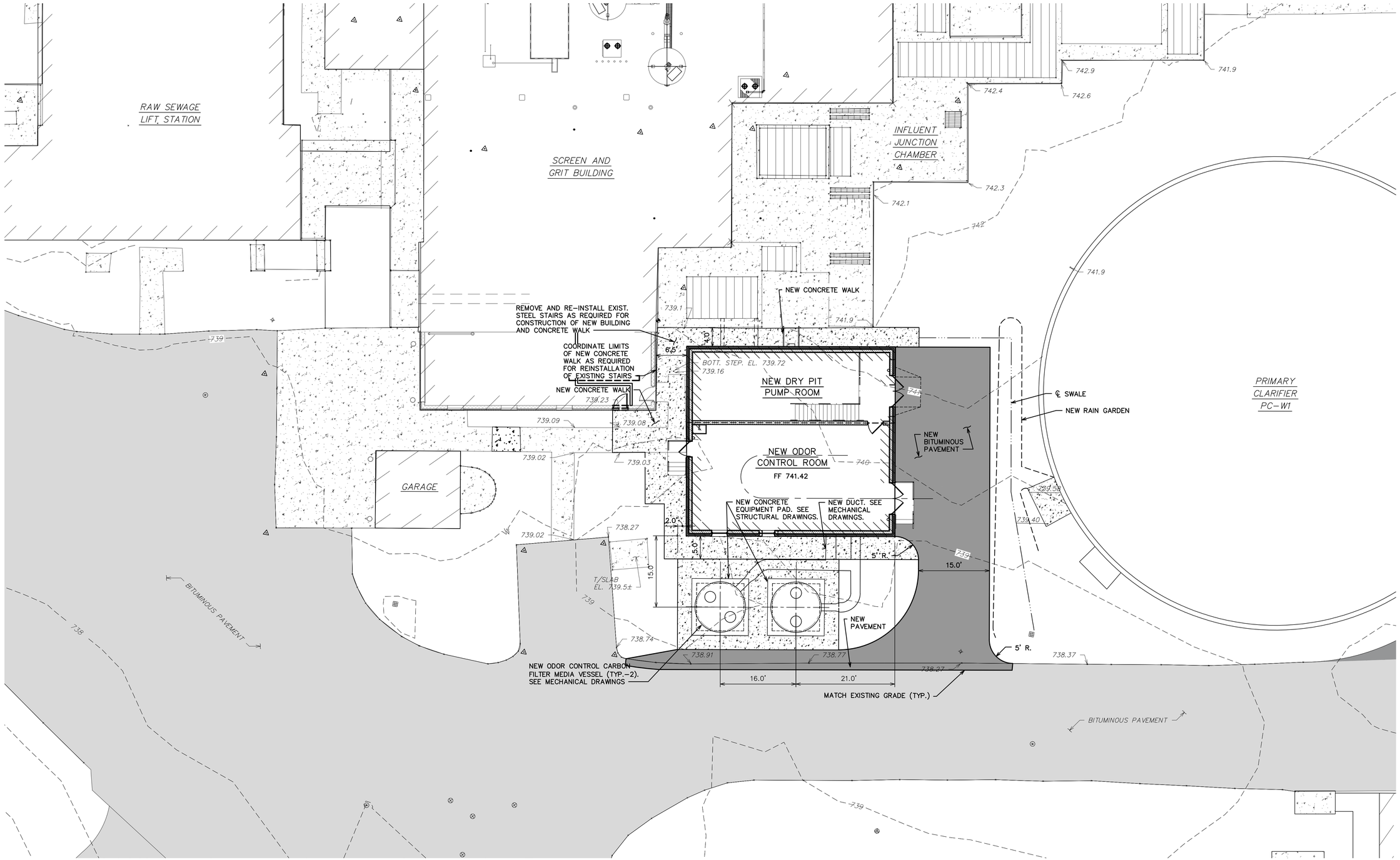

PROPOSED SITE GRADING
SCALE: 1" =10'

N

NOTICE:
ALL EXISTING UTILITIES SHOWN ON THIS TOPOGRAPHIC SURVEY HAVE BEEN TAKEN FROM VISUAL OBSERVATION, AND RECORD MAPPING WHERE AVAILABLE. NO GUARANTEE IS MADE, OR SHOULD BE ASSUMED, AS TO THE COMPLETENESS OR ACCURACY OF THE UTILITIES SHOWN ON THIS DRAWING. PARTIES UTILIZING THIS INFORMATION SHALL FIELD VERIFY THE ACCURACY AND COMPLETENESS PRIOR TO CONSTRUCTION ACTIVITIES.

0 5 10 20
SCALE IN FEET
FOR TRUE SCALE PLOT THIS SHEET TO 34" X 22" PAPER SIZE

811 Know what's below. Call before you dig.

REV.	DESCRIPTION	DATE	DRAWN	CHECKED
	ISSUED FOR BIDS SET	12-13-2021		
	90% DESIGN SUBMITTAL	11-22-2021		
	70% DESIGN SUBMITTAL	10-29-2021		
	50% DESIGN SUBMITTAL	10-01-2021		

CITY OF ANN ARBOR
PUBLIC SERVICES
301 EAST HURON STREET
P.O. BOX 8647
ANN ARBOR, MI 48107-8647
734-794-6410
www.a2gov.org

PROJECT MANAGEMENT - PUBLIC SERVICES - CITY OF ANN ARBOR
HEADWORKS IMPROVEMENTS PROJECT
PROPOSED SITE GRADING

SCALE 1"=20'
DRAWING No. 206
SHEET No. C-04

NOTES:
1. PAVEMENT SHALL MEET SLAB AT DOOR THRESHOLD OR SLIGHTLY LOWER (1/4" MAX.) BUT SHALL NOT BE HIGHER THAN DOORWAY.

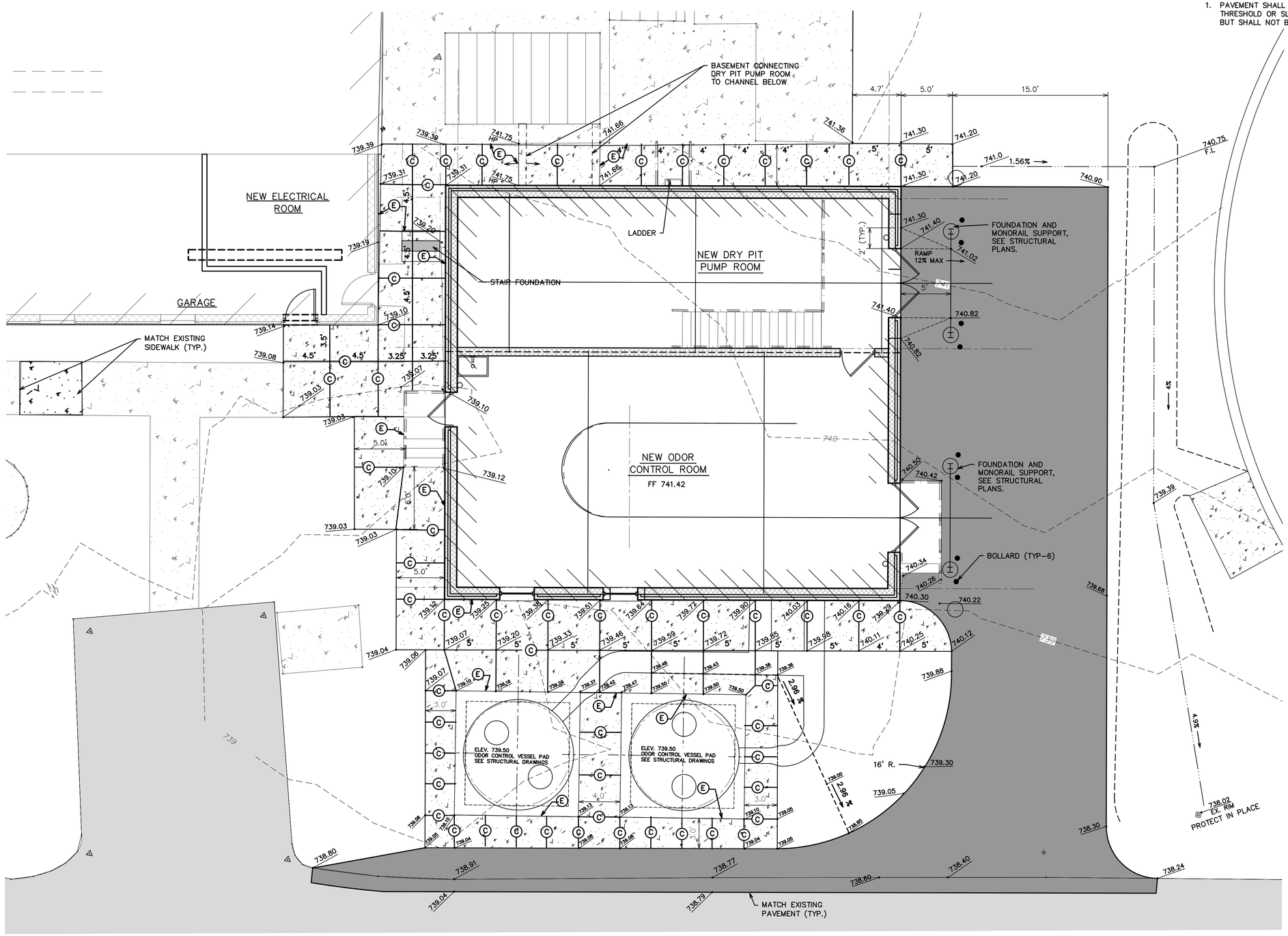

JOINT LEGEND
- (C) CONTROL JOINT
- (E) EXPANSION JOINT

PROPOSED DETAILED SITE GRADING
SCALE: 1" =5'

N

NOTICE:
ALL EXISTING UTILITIES SHOWN ON THIS TOPOGRAPHIC SURVEY HAVE BEEN TAKEN FROM VISUAL OBSERVATION, AND RECORD MAPPING WHERE AVAILABLE. NO GUARANTEE IS MADE, OR SHOULD BE ASSUMED, AS TO THE COMPLETENESS OR ACCURACY OF THE UTILITIES SHOWN ON THIS DRAWING. PARTIES UTILIZING THIS INFORMATION SHALL FIELD VERIFY THE ACCURACY AND COMPLETENESS PRIOR TO CONSTRUCTION ACTIVITIES.

0 2.5 5 10
SCALE IN FEET

FOR TRUE SCALE PLOT THIS SHEET TO 34" X 22" PAPER SIZE

811 Know what's below. Call before you dig.

REV.	DESCRIPTION	DATE	DRAWN	CHECKED
	ISSUED FOR BIDS SET	12-13-2021		
	90% DESIGN SUBMITTAL	11-22-2021		
	70% DESIGN SUBMITTAL	10-29-2021		
	50% DESIGN SUBMITTAL	10-01-2021		

CITY OF ANN ARBOR
PUBLIC SERVICES
301 EAST HURON STREET
P.O. BOX 8647
ANN ARBOR, MI 48107-8647
734.794.6410
www.a2gov.org

PROJECT MANAGEMENT - PUBLIC SERVICES - CITY OF ANN ARBOR

HEADWORKS IMPROVEMENTS PROJECT
PROPOSED DETAILED SITE GRADING

SCALE 1"=5'

DRAWING No. 208

SHEET No. C-05

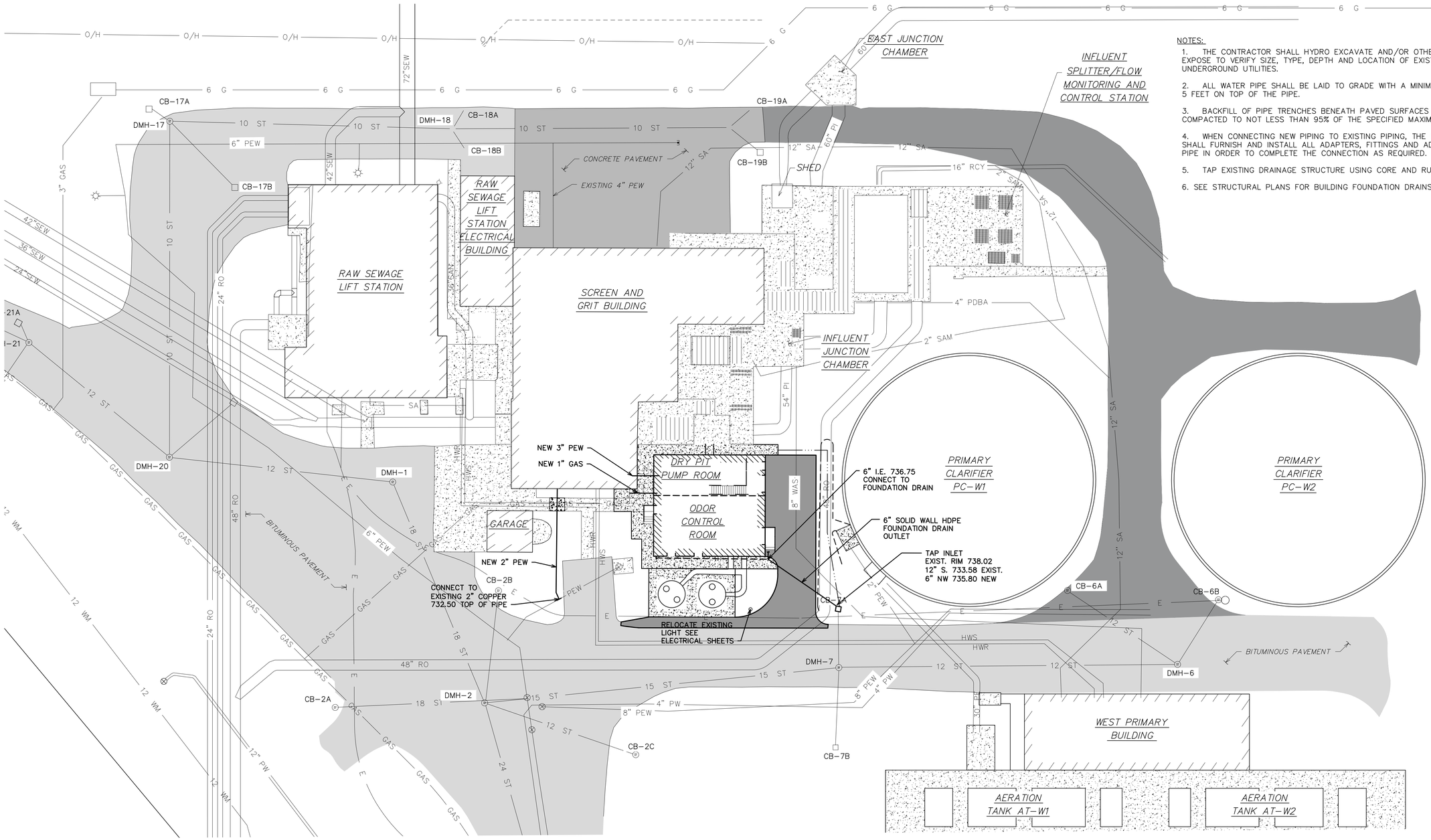

NOTES:

1. THE CONTRACTOR SHALL HYDRO EXCAVATE AND/OR OTHERWISE EXPOSE TO VERIFY SIZE, TYPE, DEPTH AND LOCATION OF EXISTING UNDERGROUND UTILITIES.
2. ALL WATER PIPE SHALL BE LAID TO GRADE WITH A MINIMUM COVER OF 5 FEET ON TOP OF THE PIPE.
3. BACKFILL OF PIPE TRENCHES BENEATH PAVED SURFACES IS TO BE COMPACTED TO NOT LESS THAN 95% OF THE SPECIFIED MAXIMUM DENSITY.
4. WHEN CONNECTING NEW PIPING TO EXISTING PIPING, THE CONTRACTOR SHALL FURNISH AND INSTALL ALL ADAPTERS, FITTINGS AND ADDITIONAL PIPE IN ORDER TO COMPLETE THE CONNECTION AS REQUIRED.
5. TAP EXISTING DRAINAGE STRUCTURE USING CORE AND RUBBER BOOT.
6. SEE STRUCTURAL PLANS FOR BUILDING FOUNDATION DRAINS.

PROPOSED UTILITY PLAN

SCALE: 1" =20'

N

NOTICE:

ALL EXISTING UTILITIES SHOWN ON THIS TOPOGRAPHIC SURVEY HAVE BEEN TAKEN FROM VISUAL OBSERVATION, AND RECORD MAPPING WHERE AVAILABLE. NO GUARANTEE IS MADE, OR SHOULD BE ASSUMED, AS TO THE COMPLETENESS OR ACCURACY OF THE UTILITIES SHOWN ON THIS DRAWING. PARTIES UTILIZING THIS INFORMATION SHALL FIELD VERIFY THE ACCURACY AND COMPLETENESS PRIOR TO CONSTRUCTION ACTIVITIES.

0 5 10 20 40

SCALE IN FEET

FOR TRUE SCALE PLOT THIS SHEET TO 34" X 22" PAPER SIZE

811 Know what's below. Call before you dig.

REV.	DESCRIPTION	DATE	DRAWN	CHECKED
	ISSUED FOR BIDS SET	12-13-2021		
	90% DESIGN SUBMITTAL	11-22-2021		
	70% DESIGN SUBMITTAL	10-29-2021		
	50% DESIGN SUBMITTAL	10-01-2021		

CITY OF ANN ARBOR
PUBLIC SERVICES
301 EAST HURON STREET
P.O. BOX 8647
ANN ARBOR, MI 48107-8647
(734) 794-6410
www.a2gov.org

CITY OF ANN ARBOR MICHIGAN

PROJECT MANAGEMENT - PUBLIC SERVICES - CITY OF ANN ARBOR

HEADWORKS IMPROVEMENTS PROJECT

PROPOSED UTILITIES PLAN

SCALE 1"=20'

DRAWING No. 210

SHEET No. C-06

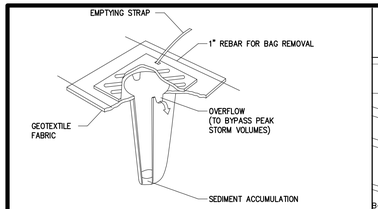

CATCH BASIN INSERT

36–T 36A T

NO SCALE

CATCH BASIN INSERT NOTES:

1. INSTALL SILTSACK IN CATCH BASIN, MAKING SURE STRAPS ARE LAID FLAT, OUTSIDE OF BASIN AND HELD IN PLACE BY DRAIN GRATE.
2. HOLD DOWN REMOVAL FLAP POCKETS AND EMPTYING STRAPS BY COVERING WITH SOIL.
3. USE CURB STYLE INSERTS WITH FABRIC ROLL FOR OPEN BACK CURB INLETS.
4. INSPECT FOR MAINTENANCE EVERY 2 WEEKS OR AFTER A STORM EVENT.

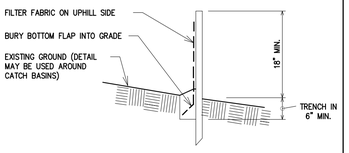

SILT FENCE TRENCH DETAIL

55–T

NO SCALE

SILT FENCE NOTES:

1. SILT FENCE SHALL BE PLACED ON SLOPE CONTOURS TO MAXIMIZE PONDING EFFICIENCY.
2. INSPECT AND REPAIR FENCE AFTER EACH STORM EVENT AND REMOVE SEDIMENT WHEN NECESSARY, @ MAXIMUM RECOMMENDED STORAGE HEIGHT.
3. REMOVED SEDIMENT SHALL BE DEPOSITED TO AN AREA THAT WILL NOT CONTRIBUTE SEDIMENT OFF-SITE AND CAN BE PERMANENTLY STABILIZED.

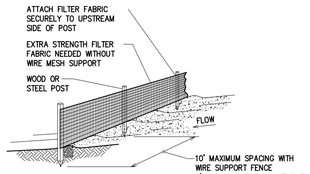

SILT FENCE

55–T

NO SCALE

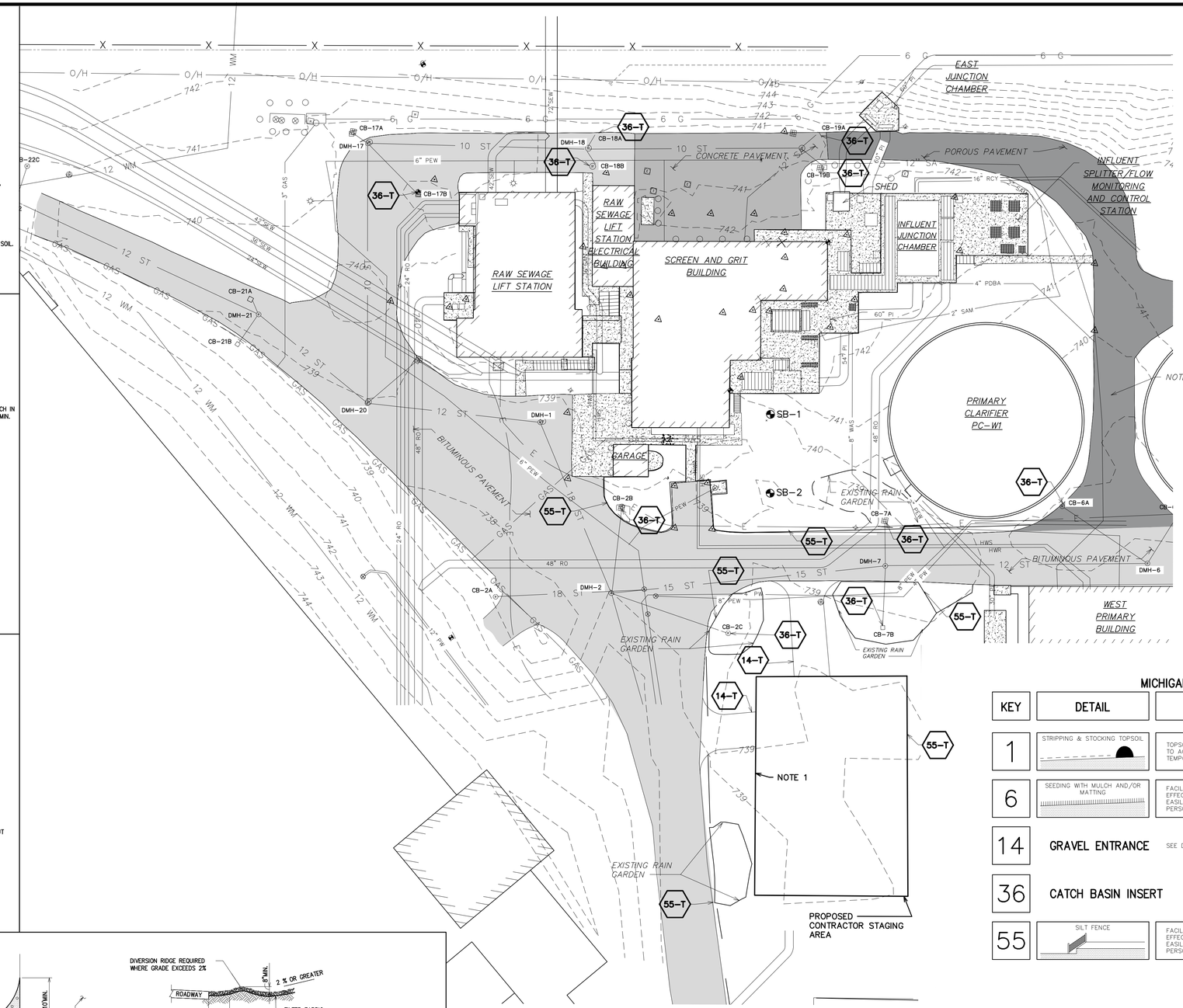

EXISTING SITE PLAN

SCALE: 1" =30'

N

GENERAL NOTES:

1. THE EXISTING STAGING AREA INCLUDES SHALLOW UNDER DRAINS THAT CONVEY SUBSURFACE WATER FROM STAGING AREA TO THE FOUR SURROUNDING RAIN GARDENS. THESE UNDER DRAINS MUST BE PROTECTED THROUGHOUT THE DURATION OF CONSTRUCTION. IN THE EVENT THE UNDER DRAINS ARE DAMAGED DURING CONSTRUCTION, THEY MUST BE RESTORED TO THEIR EXISTING CONDITION. THE EXISTING DRAINS ARE APPROXIMATELY 12 TO 18 INCHES BELOW GRADE. LOCATIONS OF DRAINS ARE UNKNOWN. FOR EXACT LOCATIONS, INVESTIGATIONS AT THE EXPENSE OF THE CONTRACTOR ARE REQUIRED.
2. AT ANY POINT DURING CONSTRUCTION THE CONTRACTOR MAY NOT UTILIZE THE EXISTING POROUS PAVEMENT DRIVES LOCATED NORTH EAST OF THE EXISTING HEADWORKS BUILDING. IN THE EVENT THE POROUS PAVEMENT DRIVES ARE UTILIZED AND DAMAGED, THEY MUST BE REPLACED TO THEIR EXISTING CONDITION.

NOTE:

1. THIS IS AN EXAMPLE SHEET OF MEASURES. THE CONTRACTOR SHALL MODIFY THIS SHEET AS NEEDED TO OBTAIN THE SOIL EROSION CONTROL PERMIT FROM THE GOVERNING AUTHORITY BASED ON THE CONTRACTORS PLANNED SEQUENCE AND WORK.
2. 100 YEAR FLOOD ELEVATION IS 583.40, NO DISTURBANCE OR STOCKPILING OF SOILS AT ELEVATIONS BELOW THIS LEVEL SHALL BE DONE. IN ADDITION, NO MATERIALS SHALL BE PLACED IN THE WETLAND AREA NOTED ON THE DRAWINGS OR DISTURBANCE OF THIS AREA WILL BE ALLOWED.

LEGEND

55–T	SILT FENCE	36A T	LOW POINT INLET FILTER (PROPOSED STRUCTURES)
36–T	LOW POINT INLET FILTER	14–T	TEMPORARY CONSTRUCTION ACCESS

MICHIGAN UNIFIED KEYING SYSTEM

KEY	DETAIL	CHARACTERISTICS	SYMBOL
1	STRIPPING & STOCKING TOPSOIL	TOPSOIL MAY BE STOCKPILED ABOVE BORROW AREAS TO ACT AS A DIVERSION. STOCKPILE SHOULD BE TEMPORARY SEEDED.	
6	SEEDING WITH MULCH AND/OR MATTING	FACILITATES ESTABLISHMENT OF VEGETATIVE COVER EFFECTIVE FOR DRAINAGE WAYS WITH LOW VELOCITY. EASILY PLACED IN SMALL QUANTITIES BY INEXPERIENCED PERSONNEL SHOULD INCLUDE PREPARED TOPSOIL BED	
14	GRAVEL ENTRANCE	SEE DETAIL THIS SHEET	
36	CATCH BASIN INSERT	SEE DETAIL THIS SHEET	
55	SILT FENCE	FACILITATES ESTABLISHMENT OF VEGETATIVE COVER EFFECTIVE FOR DRAINAGE WAYS WITH LOW VELOCITY. EASILY PLACED IN SMALL QUANTITIES BY INEXPERIENCED PERSONNEL SHOULD INCLUDE PREPARED TOPSOIL BED	SF

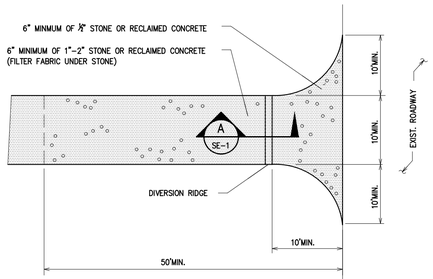

TEMPORARY GRAVEL CONSTRUCTION ENTRANCE

14–T

NO SCALE

TYPICAL CROSS SECTION

A SE–1

NO SCALE

TEMPORARY GRAVEL ACCESS NOTES:

1. THE ENTRANCE SHALL BE MAINTAINED IN A CONDITION THAT WILL PREVENT TRACKING OR FLOWING OF SEDIMENT ONTO PUBLIC RIGHT–OF–WAYS. THIS MAY REQUIRE TOP DRESSING, REPAIR AND/OR CLEANOUT OF ANY MEASURES USED TO TRAP SEDIMENT.
2. WHEN NECESSARY, WHEELS SHALL BE CLEANED PRIOR TO ENTRANCE ONTO PUBLIC RIGHT–OF–WAY.
3. WHEN WASHING IS REQUIRED, IT SHALL BE DONE ON AN AREA STABILIZED WITH CRUSHED STONE THAT DRAINS INTO AN APPROVED SEDIMENT TRAP OR SEDIMENT BASIN.
4. THE CONTRACTOR SHALL ALSO PROVIDE AND MAINTAIN A DEDICATED GRAVEL PARKING AREA FOR CONSTRUCTION EMPLOYEES ADJACENT/CONNECTED TO GRAVEL ENTRANCE. THE PARKING AREA SHALL BE LARGE ENOUGH TO PARK ALL VEHICLES AT THE PEAK OF CONSTRUCTION.

3 FULL WORKING DAYS
BEFORE YOU DIG CALL MISS DIG
1-800-482-7171
Member utilities are required to locate their facilities at no charge to the caller.

NOTICE:

ALL EXISTING UTILITIES SHOWN ON THIS TOPOGRAPHIC SURVEY HAVE BEEN TAKEN FROM VISUAL OBSERVATION, AND RECORD MAPPING WHERE AVAILABLE. NO GUARANTEE IS MADE, OR SHOULD BE ASSUMED, AS TO THE COMPLETENESS OR ACCURACY OF THE UTILITIES SHOWN ON THIS DRAWING. PARTIES UTILIZING THIS INFORMATION SHALL FIELD VERIFY THE ACCURACY AND COMPLETENESS PRIOR TO CONSTRUCTION ACTIVITIES.

0 7.5 15 30 60
SCALE IN FEET

FOR TRUE SCALE PLOT THIS SHEET TO 34" X 22" PAPER SIZE

Know what's below. Call before you dig. 811

REV.	DESCRIPTION	DATE	DRAWN	CHECKED
	ISSUED FOR BIDS SET	12–13–2021		
	90% DESIGN SUBMITTAL	11–22–2021		
	70% DESIGN SUBMITTAL	10–29–2021		
	50% DESIGN SUBMITTAL	10–01–2021		

CITY OF ANN ARBOR
PUBLIC SERVICES
301 E. HURON STREET
P.O. BOX 8647
ANN ARBOR, MI 48107-8647
734-794-6410
www.a2gov.org

PROJECT MANAGEMENT - PUBLIC SERVICES - CITY OF ANN ARBOR

HEADWORKS IMPROVEMENTS PROJECT

SESC PLAN

SCALE 1"=30'

DRAWING No. 212

SHEET No. C–07

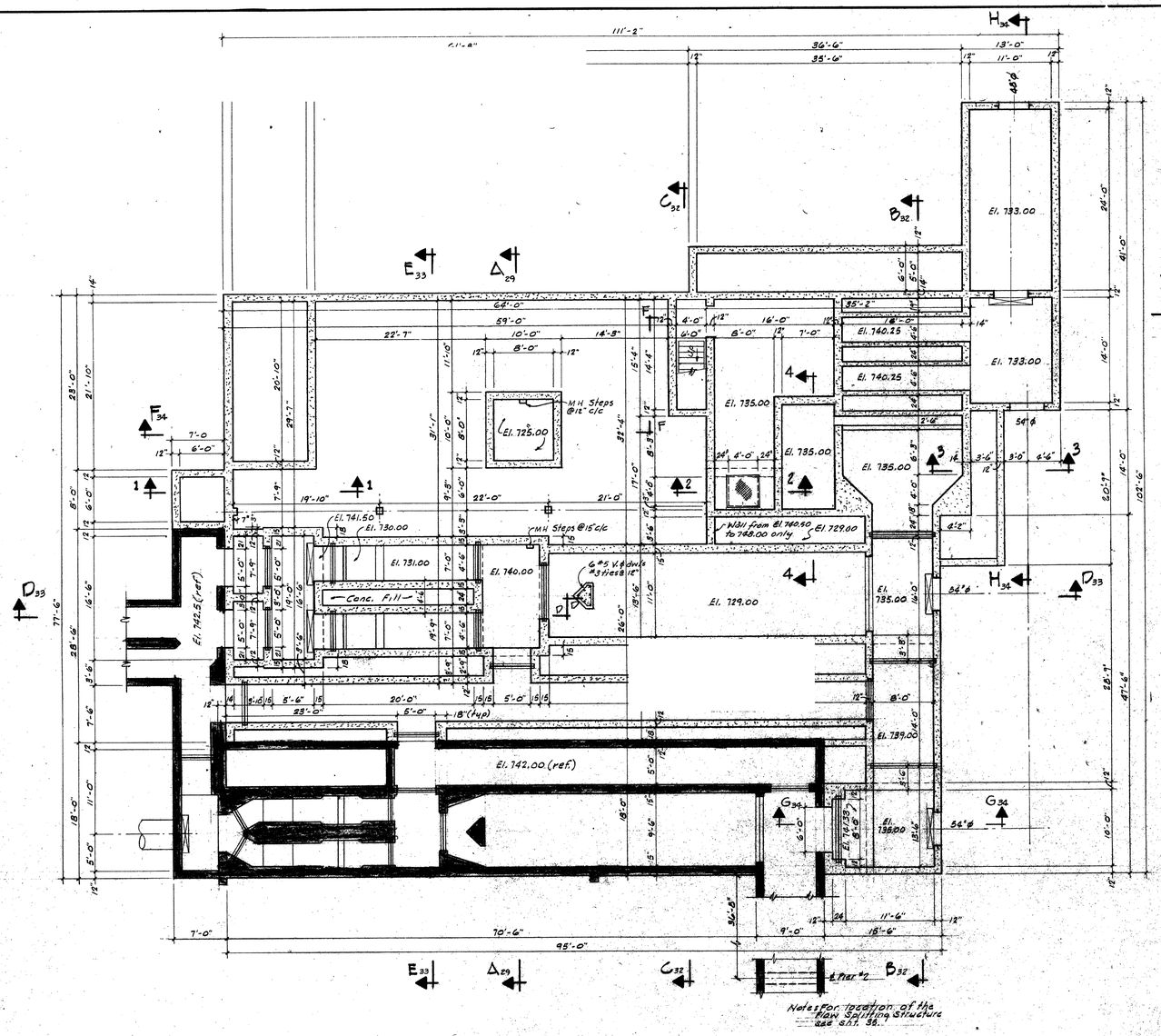

SECTIONAL PLAN
SCALE: 1/8" = 1'-0"

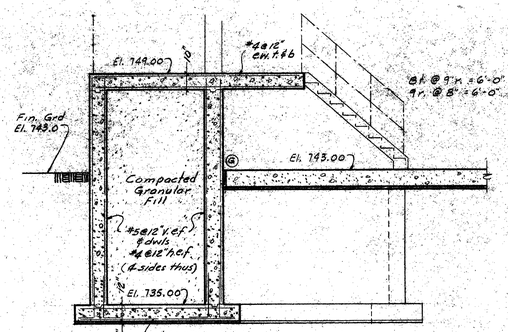

SECTION 1-1
SCALE ~ 1/4" = 1'-0"

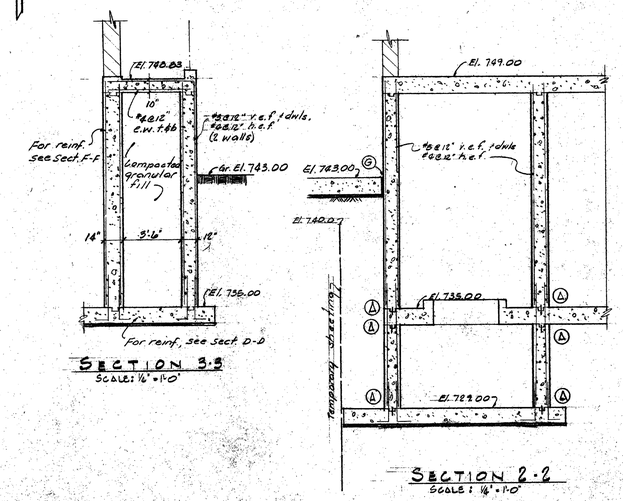

SECTION 3-3
SCALE: 1/4" = 1'-0"

SECTION 2-2
SCALE: 1/4" = 1'-0"

NOTICE:
THIS DRAWING HAS BEEN COPIED FROM A PREVIOUS CONSTRUCTION PROJECT. NO GUARANTEE IS MADE, OR SHOULD BE ASSUMED AS TO THE COMPLETENESS OR ACCURACY OF THE INFORMATION SHOWN ON THIS DRAWING. PARTIES UTILIZING THIS INFORMATION SHALL FIELD VERIFY THE ACCURACY AND COMPLETENESS PRIOR TO CONSTRUCTION/DEMOLITION ACTIVITIES. THIS DRAWING IS NOT TO SCALE.

McNAMEE, PORTER AND SEELEY CONSULTING ENGINEERS ANN ARBOR, MICHIGAN		WASHTENAW COUNTY DEPARTMENT OF PUBLIC WORKS CITY OF ANN ARBOR, MICHIGAN WASTEWATER TREATMENT PLANT IMPROVEMENTS
SCALE 1/8" = 1'-0" 1/4" = 1'-0"	ISSUED APRIL 1977	STRUCTURAL SCREEN AND GRIT BLDG. SECTIONAL PLAN
DRAWN HAN	TRACED JMB	CHECKED TIC
ISSUE	NATURE OF REVISION	DATE
	CONFORMING TO CONSTRUCTION RECORDS	4/81
		CONTRACT 77-S-6 C28 2539.04

BRUNING 44-132

811 Know what's below. Call before you dig.

REV.	DESCRIPTION	DATE	DRAWN	CHECKED
	ISSUED FOR BIDS SET	12-13-2021	PMH	SDH
	90% DESIGN SUBMITTAL	11-22-2021	PMH	SDH
	70% DESIGN SUBMITTAL	10-29-2021	PMH	SDH
	50% DESIGN SUBMITTAL	10-01-2021		

CITY OF ANN ARBOR
PUBLIC SERVICES
301 EAST HURON STREET
P.O. BOX 8647
ANN ARBOR, MI 48107-8647
734-794-6410
www.a2gov.org

PROJECT MANAGEMENT - PUBLIC SERVICES - CITY OF ANN ARBOR
HEADWORKS IMPROVEMENTS PROJECT
REFERENCE PLAN

SCALE N.T.S.
DRAWING No. 301
SHEET No. RS-01

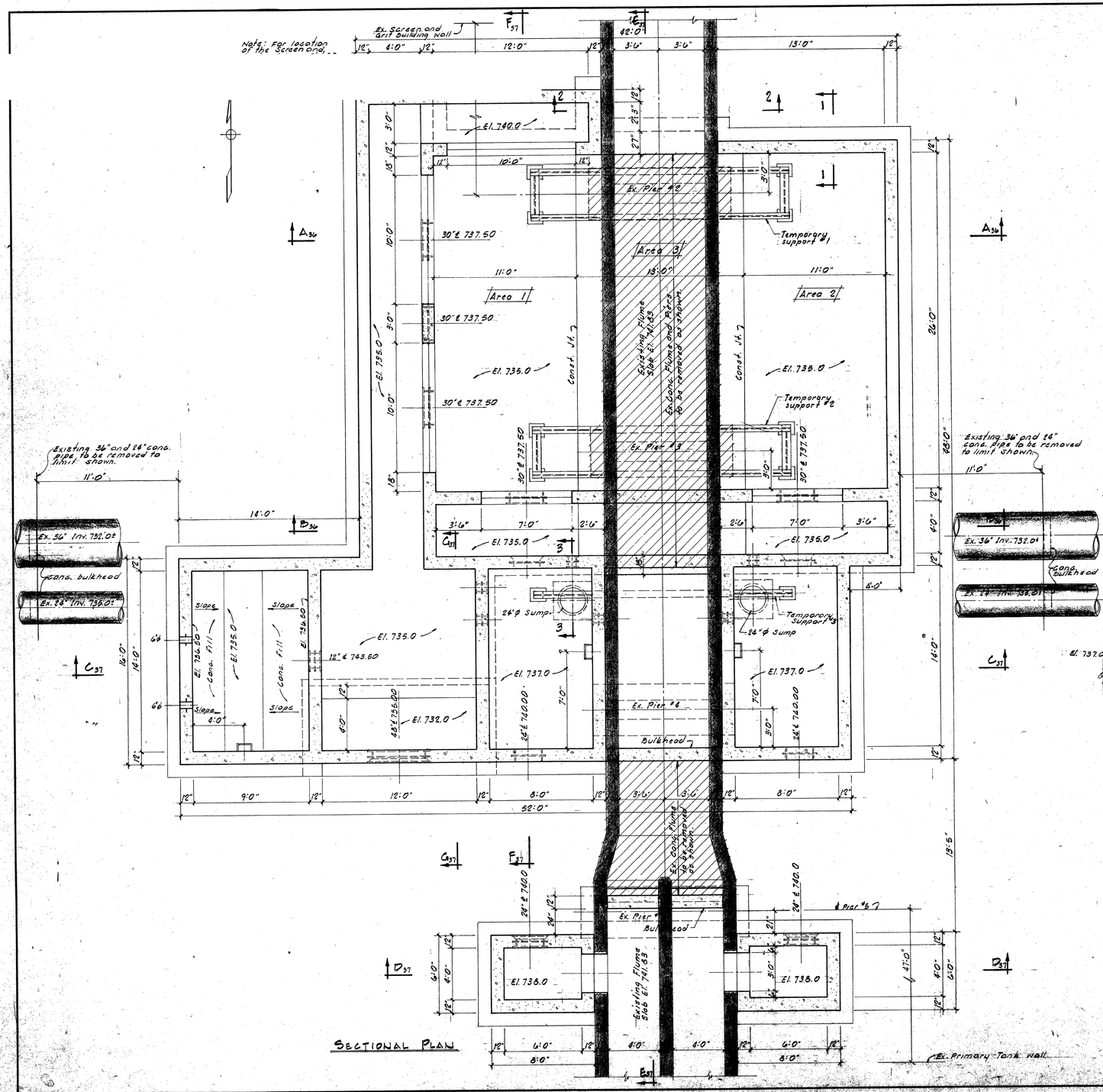

SEQUENCE OF CONSTRUCTION

1. Excavate entire area to the extent shown.
2. Form and Pour base slab in Areas 1 and 2 at El. 735.00.
3. Provide Temporary supports #1 and #2 for the existing flume at existing Piers #2 and #3.
4. Remove existing Piers #2 and #3 to the bottom of flume.
5. Complete base slab in Area 3 at El. 735.00.
6. Pour slab at El. 737.00. (Section C-C)
7. Provide Temporary support #3 for the flume on slab at El. 737.00.
8. Form and pour walls to the extent possible.
9. Construct the two small junction boxes, one each side of the existing flume.
10. Break the existing flume to the extent shown.
11. Construct bulkheads and complete the remaining work.

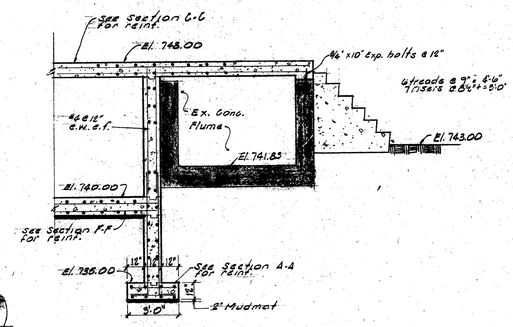

SECTION 2-2

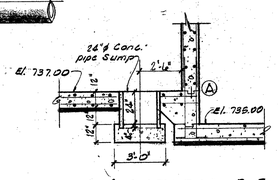

SECTION 3-3

NOTICE:
THIS DRAWING HAS BEEN COPIED FROM A PREVIOUS CONSTRUCTION PROJECT. NO GUARANTEE IS MADE, OR SHOULD BE ASSUMED AS TO THE COMPLETENESS OR ACCURACY OF THE INFORMATION SHOWN ON THIS DRAWING. PARTIES UTILIZING THIS INFORMATION SHALL FIELD VERIFY THE ACCURACY AND COMPLETENESS PRIOR TO CONSTRUCTION/DEMOLITION ACTIVITIES. THIS DRAWING IS NOT TO SCALE.

McNAMEE, PORTER AND SEELEY CONSULTING ENGINEERS ANN ARBOR, MICHIGAN			WASHTENAW COUNTY DEPARTMENT OF PUBLIC WORKS CITY OF ANN ARBOR, MICHIGAN WASTEWATER TREATMENT PLANT IMPROVEMENTS
SCALE 1/4"=1'-0"	ISSUED APRIL 1977		STRUCTURAL
DRAWN H.A.N.	TRACED K.M.U.	CHECKED T.I.G.	FLOW SPLITTING STRUCTURE
ISSUE	NATURE OF REVISION	DATE	SECTIONAL PLAN DETAILS
	CONFORMING TO CONSTRUCTION RECORDS	4/81	CONTRACT 77-S-6 C26 2539 04 SHEET 35

BRUNING 44-132—

811 Know what's below. Call before you dig.

REV.	DESCRIPTION	DATE	DRAWN	CHECKED
	ISSUED FOR BIDS SET	12-13-2021	PMH	SDH
	90% DESIGN SUBMITTAL	11-22-2021	PMH	SDH
	70% DESIGN SUBMITTAL	10-29-2021	PMH	SDH
	50% DESIGN SUBMITTAL	10-01-2021		

CITY OF ANN ARBOR PUBLIC SERVICES
301 EAST HURON STREET
P.O. BOX 8647
ANN ARBOR, MI 48107-8647
734-794-6410
www.a2gov.org

PROJECT MANAGEMENT - PUBLIC SERVICES - CITY OF ANN ARBOR

HEADWORKS IMPROVEMENTS PROJECT

REFERENCE PLAN

SCALE N.T.S.

DRAWING No. 302

SHEET No. RS-02

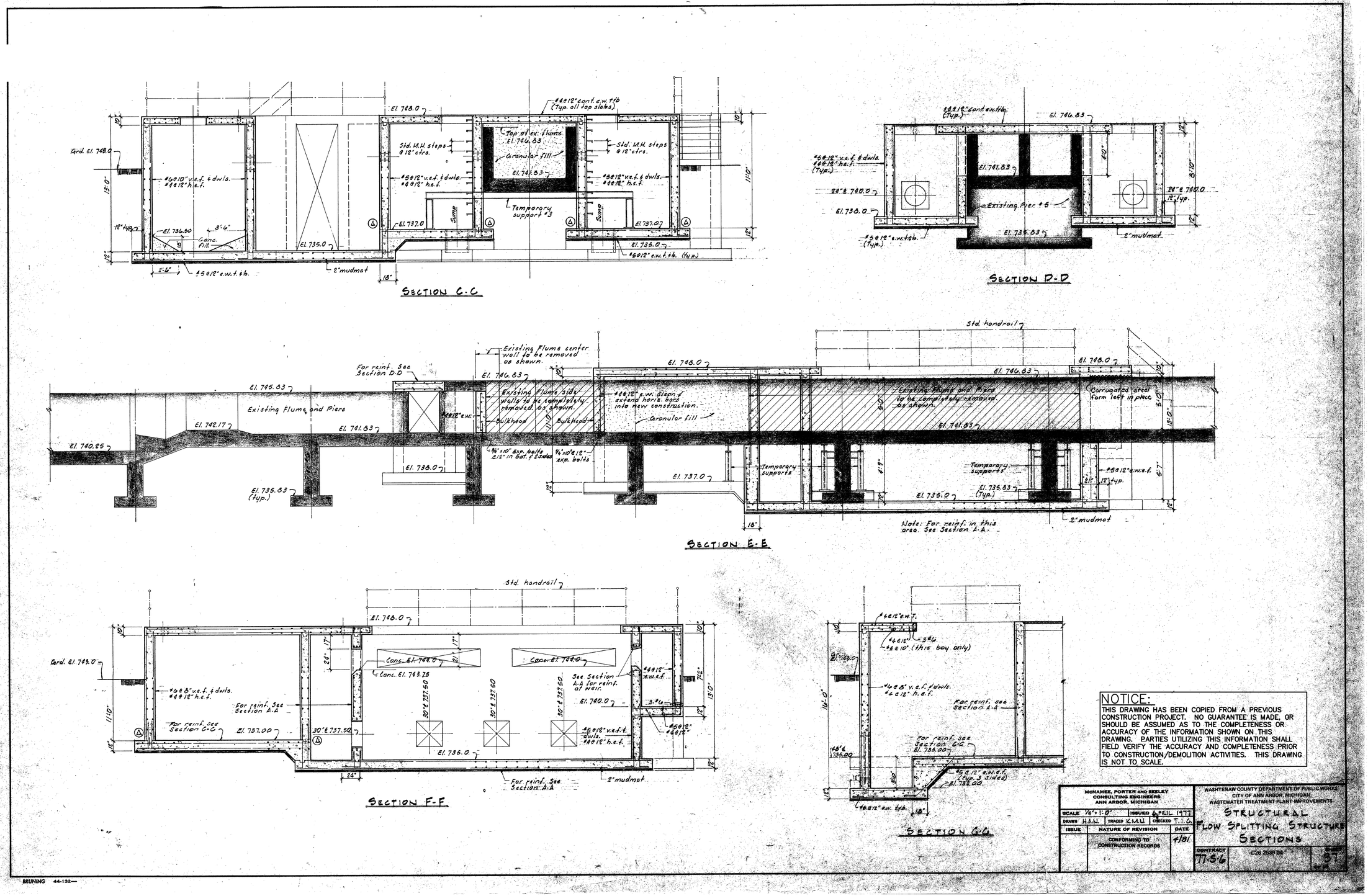

NOTICE:
THIS DRAWING HAS BEEN COPIED FROM A PREVIOUS CONSTRUCTION PROJECT. NO GUARANTEE IS MADE, OR SHOULD BE ASSUMED AS TO THE COMPLETENESS OR ACCURACY OF THE INFORMATION SHOWN ON THIS DRAWING. PARTIES UTILIZING THIS INFORMATION SHALL FIELD VERIFY THE ACCURACY AND COMPLETENESS PRIOR TO CONSTRUCTION/DEMOLITION ACTIVITIES. THIS DRAWING IS NOT TO SCALE.

McNAMEE, PORTER AND SEELEY
CONSULTING ENGINEERS
ANN ARBOR, MICHIGAN

SCALE 1/4" = 1'-0"		ISSUED APRIL 1977	
DRAWN H.A.N.	TRACED K.M.U.	CHECKED T.I.G.	
ISSUE	NATURE OF REVISION		DATE
	CONFORMING TO CONSTRUCTION RECORDS		4/81

WASHTENAW COUNTY DEPARTMENT OF PUBLIC WORKS
CITY OF ANN ARBOR, MICHIGAN
WASTEWATER TREATMENT PLANT IMPROVEMENTS

STRUCTURAL
FLOW SPLITTING STRUCTURE
SECTIONS

CONTRACT 77-S-6 | C26 2539 04 | SHEET 87

811 Know what's below. Call before you dig.

REV.	DESCRIPTION	DATE	DRAWN	CHECKED
	ISSUED FOR BIDS SET	12-13-2021	PMH	SDH
	90% DESIGN SUBMITTAL	11-22-2021	PMH	SDH
	70% DESIGN SUBMITTAL	10-29-2021	PMH	SDH
	50% DESIGN SUBMITTAL	10-01-2021		

CITY OF ANN ARBOR
PUBLIC SERVICES
301 EAST HURON STREET
P.O. BOX 8647
ANN ARBOR, MI 48107-8647
734-794-6410
www.a2gov.org

PROJECT MANAGEMENT - PUBLIC SERVICES - CITY OF ANN ARBOR
HEADWORKS IMPROVEMENTS PROJECT
REFERENCE PLAN

SCALE N.T.S.
DRAWING No. 303
SHEET No. RS-03

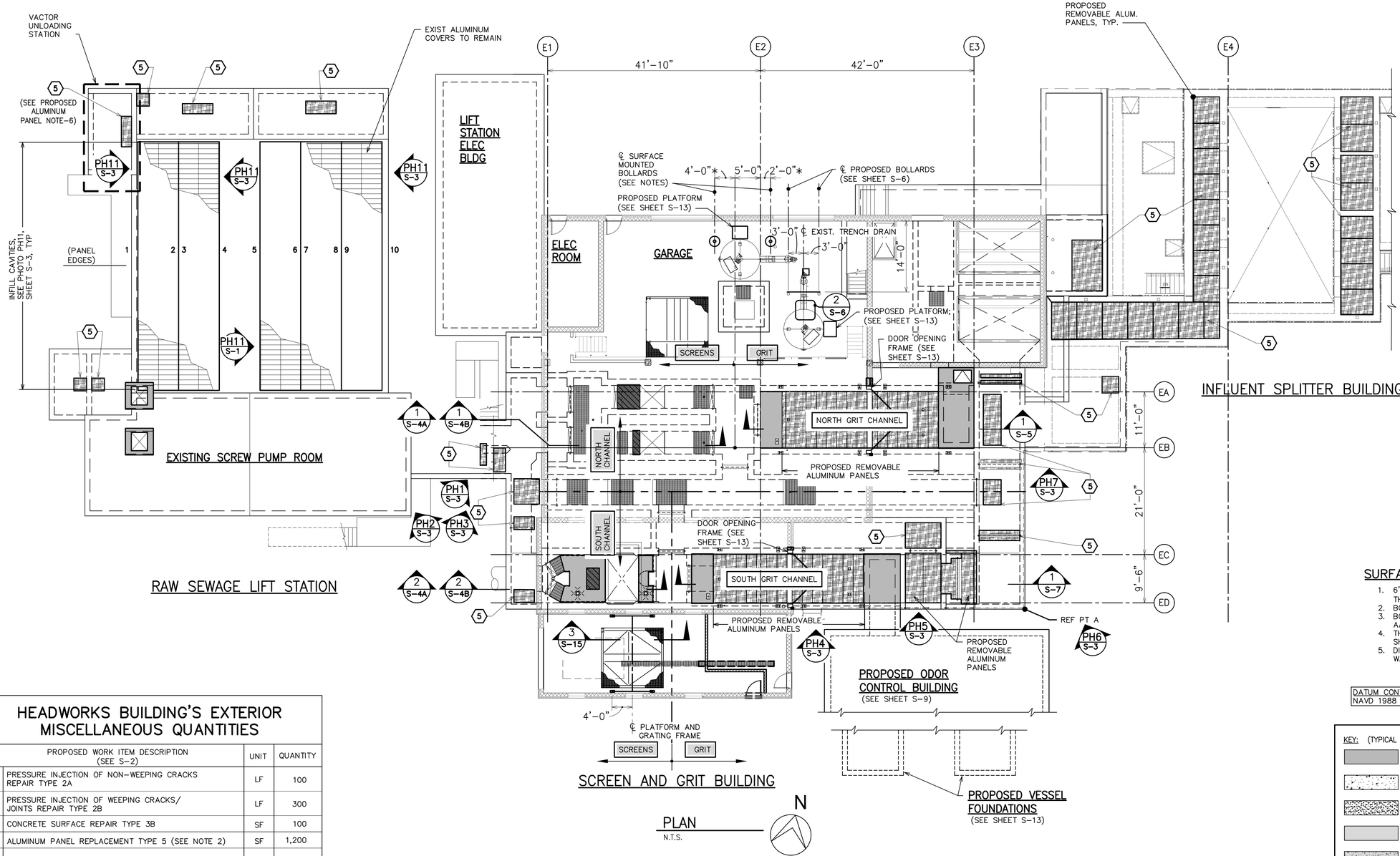

HEADWORKS BUILDING'S EXTERIOR MISCELLANEOUS QUANTITIES

	PROPOSED WORK ITEM DESCRIPTION (SEE S-2)	UNIT	QUANTITY
⟨2A⟩	PRESSURE INJECTION OF NON-WEEPING CRACKS REPAIR TYPE 2A	LF	100
⟨2B⟩	PRESSURE INJECTION OF WEEPING CRACKS/ JOINTS REPAIR TYPE 2B	LF	300
⟨3B⟩	CONCRETE SURFACE REPAIR TYPE 3B	SF	100
⟨5⟩	ALUMINUM PANEL REPLACEMENT TYPE 5 (SEE NOTE 2)	SF	1,200

NOTES:
1. THE QUANTITIES FOR THE WORK ITEM DESCRIPTIONS ABOVE ARE APPROXIMATE. CONTRACTOR SHALL BE PAID IN FULL FOR ACTUAL AS-CONSTRUCTED AMOUNTS USED ABOVE/BELOW BASE QUANTITY SHOWN. CONTRACTOR TO FILL IN PRICING SHEET ON THE BID FORM IN SPEC SECTION 00300.
2. COMBINED TOTAL FOR BUILDING INTERIOR AND EXTERIOR PANELS. N & S GRIT CHANNEL PROPOSED ALUMINUM PANELS ARE DIFFERENT THAN ⟨5⟩ AND THEIR QUANTITY IS EXCLUDED.

PROPOSED ALUMINUM PANEL NOTES:
1. THE DESIGN OF THE PROPOSED ALUMINUM PANELS AND THE STRUCTURAL SUPPORT SYSTEM FOR THE PANELS SHALL BE A CONTRACTOR'S DELEGATED DESIGN THAT SHALL MEET OR EXCEED THE REQUIREMENTS DEFINED ON THE CONTRACT DRAWINGS AND SPECIFICATION SECTION 11396.
2. ALUMINUM PANELS SHALL BE RATED FOR THE FOLLOWING LIVE LOADS:
   - @ NORTH GRIT AND SOUTH GRIT CHANNELS (ALL ELEVATIONS):
     UNIFORM..... 150 PSF.
     CONCENTRATED..... 400 LBS ON 4"x4" AREA.
   - @ ALL OTHER LOCATIONS (ALL ELEVATIONS):
     UNIFORM..... 100 PSF.
     CONCENTRATED..... 300 LBS ON 4"x4" AREA.
3. ALUMINUM PANEL AND SUPPORT SYSTEM LIVE LOAD DEFLECTION SHALL NOT EXCEED 1/4-INCH AND L/360 OF SPAN.
4. AS PART OF THE WORK, EXISTING INTERIOR & EXTERIOR GRATING SHALL BE REPLACED WITH SOLID ALUMINUM PANELS. PANELS DEPTH SHALL MATCH THE DEPTH OF EXISTING GRATING. EXISTING GRATING SUPPORTS MAY REMAIN AND BE RE-USED. REFER TO STRUCTURAL DEMOLITION SHEETS FOR EXISTING GRATING LOCATIONS.
5. THE CONTRACTOR SHALL TAKE FIELD MEASUREMENTS PRIOR TO THE PREPARATION OF FINAL SHOP DRAWINGS AND FABRICATION TO ENSURE PROPER FITTING OF THE WORK. THE CONTRACTOR SHALL VERIFY PANEL SIZES AND LOCATE OPENINGS TO ACCOMMODATE APPURTENANCE PENETRATION THROUGH THE PANELS.
6. VACTOR UNLOADING STATION ALUMINUM PANEL DRAIN HOLES: FOR THIS PANEL, THE FABRICATOR SHALL PROVIDE STANDARD REMOVABLE PANEL(S) RATED FOR THE SPECIFIED LOADING AND DRILL EIGHT (8) - 1-INCH DIAMETER HOLES, EQUALLY SPACED IN A 1-FOOT x 1-FOOT SQUARE PATTERN AT THE CENTER OF THE PANEL(S). THE FABRICATOR SHALL LOCATE THE HOLES TO AVOID COMPROMISING THE PANEL'S STRUCTURAL INTEGRITY.
7. ALL ALUMINUM PANELS SHALL BE REMOVABLE AND SHALL BE FLUSH MOUNTED.
8. ALL PANELS SHALL BE FABRICATED WITH A 2% CAMBER TO ALLOW WATER RUNOFF, AND FABRICATED WITH DRAIN HOLES. PROVIDE (4) - 1" DIA. DRAIN HOLES IN EACH CORNER OF A PANEL.
9. PANELS SHALL BE FABRICATED WITH AN INTEGRAL NON-SKID SURFACE WITH A COEFFICIENT OF FRICTION GREATER THAN OR EQUAL TO 0.6 AS DETERMINED BY ANSI/NFSI B101.1.

SURFACE MOUNTED BOLLARD NOTES:

1. 6" O.D. SCH. 80 X 4'-0" WITH BASE PLATE AND THR'D ROD ANCHORS (DRILL AND GROUT).
2. BOLLARDS SHALL BE SAFETY YELLOW.
3. BOLLARDS SHALL BE IMPACT TESTED PER AASHTO LRFD BRIDGE DESIGN
4. THE CONTRACTOR SHALL SUBMIT BOLLARD CUT SHEET AND IMPACT TEST.
5. DIMENSIONS MAY BE ADJUSTED PENDING GRIT WASHER INSTALLED LOCATIONS.

DATUM CONVERSION:
NAVD 1988 EL = NEVD 1929 EL – 0.50 FT

KEY: (TYPICAL FOR SHTS S-1 THRU S-20)

- – PROPOSED CAST IN PLACE CONCRETE
- – PROPOSED PRECAST CONCRETE
- – PROPOSED CONTOURED CONCRETE FILL
- – EXISTING CONCRETE
- – PROPOSED LIGHTWEIGHT FLOWABLE CONCRETE FILL
- – EXISTING FLOWABLE CONCRETE FILL
- – PROPOSED MUDMAT
- – PROPOSED SUBGRADE
- – PROPOSED ALUMINUM PANEL
- – EXISTING GRATING TO REMAIN
- – PROPOSED GRATING

811 Know what's below. Call before you dig.

REV.	DESCRIPTION	DATE	DRAWN	CHECKED
	ISSUED FOR BIDS SET	12-13-2021	PMH	SDH
	90% DESIGN SUBMITTAL	11-22-2021	PMH	SDH
	70% DESIGN SUBMITTAL	10-29-2021	PMH	SDH
	50% DESIGN SUBMITTAL	10-01-2021	PMH	SDH

CITY OF ANN ARBOR
PUBLIC SERVICES
301 EAST HURON STREET
P.O. BOX 8647
ANN ARBOR, MI 48107-8647
734.794-6410
www.a2gov.org

PROJECT MANAGEMENT - PUBLIC SERVICES - CITY OF ANN ARBOR

HEADWORKS IMPROVEMENTS PROJECT

HEADWORKS BUILDING PLAN

SCALE N.T.S.

DRAWING No. 304

SHEET No. S-1

CHANNEL & TANK CLEANING NOTES:

1. THE CONTRACTOR IS RESPONSIBLE FOR THE CLEANING OF ENTIRE TANK TO THE SATISFACTION OF THE ENGINEER AND MANUFACTURER'S RECOMMENDATIONS, REMOVE ALL VEGETATION, SOLIDS BUILD-UP, LOOSE OR EASILY LOOSENED MATERIAL WITHOUT DAMAGING THE EXISTING SURFACES.

2. CONTAINMENT AND DISPOSAL OF DEBRIS, WATER AND/OR SPENT MEDIA IS INCLUDED AND NOT PAID FOR SEPARATELY.

3. FOLLOWING COMPLETION OF TANK CLEANING, FIELD ENGINEER SHALL BE PERMITTED TO INSPECT THE TANK FOR DETERIORATION AND/OR CRACKS. IF NECESSARY, REPAIR QUANTITIES WILL BE MODIFIED TO PROPERLY ADDRESS DEFICIENCIES. QUANTITIES WILL BE AGREED TO/MARKED OUT AFTER FIELD ENGINEER EVALUATION. THE PROVIDING OF ALL LABOR, MATERIALS, EQUIPMENT AND TIME FOR DETERMINING THE CONDITION OF THE CLEANED TANK SHALL BE INCLUDED IN THE MISCELLANEOUS QUANTITY "TANK CLEANING" AND SHALL NOT BE PAID FOR SEPARATELY.

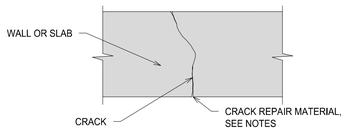

NOTES:
1. REPAIR MATERIAL SHALL BE A HIGH STRENGTH EPOXY GROUT, SPECIFICALLY DESIGNED FOR THE INJECTION OF DRY OR DAMP CRACKS, 1/4" MAX TO 1/16" MIN WIDTH. "SIKADUR 52" BY SIKA CORP OR APPROVED EQUAL.
2. BRIDGING MATERIAL SHALL BE COMPATIBLE WITH EPOXY GROUT. BRIDGING MATERIAL SHALL BE "SIKADUR 31" BY SIKA CORP OR EQUAL. INSTALL PRESSURE INJECTION PORTS AND PRESSURE INJECT THE CRACK WITH SIKADUR 52. AFTER PRESSURE INJECTION HAS BEEN COMPLETED, REMOVE PORTS AND BRIDGING MATERIAL. GRIND SMOOTH TO FINISH.
3. WHERE EXISTING CONCRETE COATING IS PRESENT, REMOVE IN A NEAT MANNER TO THE LIMITS REQUIRED TO PERFORM REPAIRS IN ACCORDANCE WITH MANUFACTURER'S RECOMMENDATIONS.
4. PRIOR TO APPLICATION, CONTRACTOR SHALL ARRANGE PRE-INSTALLATION MEETING ONSITE BETWEEN APPLICATOR, ENGINEER AND MANUFACTURER'S REPRESENTATIVE TO REVIEW:
   - SUBSTRATE CONDITION
   - PROCEDURES FOR SUBSTRATE PREPARATION
   - APPLICATION LIMITS
   - INSTALLATION METHODS
   - CURING REQUIREMENTS DURATION

   PROVIDE ALL PARTIES A MINIMUM OF TWO WEEKS' NOTICE FOR SCHEDULING.
5. INCLUDES THE PROVIDING OF ALL LABOR, MATERIALS AND EQUIPMENT NECESSARY TO PERFORM ALL WORK ASSOCIATED WITH PRESSURE INJECTION OF THE CRACKS. CONTRACTOR SHALL BE PAID IN FULL FOR ALL COSTS ASSOCIATED WITH THIS WORK AFTER COMPLETION OF THE WORK. ITEMS INCLUDED (NOT PAID FOR SEPARATELY):
   - ROUTING OUT AND THOROUGHLY CLEANING BOTH THE CONCRETE SURFACE ALONG THE CRACK AND CRACK ITSELF TO THE SATISFACTION OF THE ENGINEER
   - PRESSURE INJECTION OF WALL OR SLAB CRACKS
   - REMOVING THE INJECTION PORTS AND BRIDGING MATERIAL
   - GRIND SMOOTH TO FINISH

PRESSURE INJECTION OF NON-WEEPING CRACKS REPAIR TYPE 2A

N.T.S.

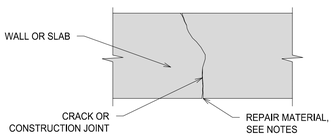

NOTES
1. REPAIR MATERIAL SHALL BE AN EXPANDING POLYURETHANE GROUT, SPECIFICALLY DESIGNED FOR THE INJECTION OF CRACKS OR JOINTS UNDER HYDROSTATIC PRESSURE, "SIKAFIX HH+" BY SIKA CORP. OR APPROVED EQUAL.
2. INSTALL PRESSURE INJECTION PORTS PER MANUFACTURER'S RECOMMENDATIONS AND PRESSURE INJECT THE CRACK WITH POLYURETHANE GROUT. AFTER PRESSURE INJECTION HAS BEEN COMPLETED, REMOVE PORTS, TOOL AND GRIND SMOOTH TO FINISH PER MANUFACTURER'S RECOMMENDATIONS.
3. FOR WIDE CRACKS/JOINTS OR HIGH WATER FLOWS, POLYURETHANE-SOAKED OPEN CELL BACKER ROD MAY BE REQUIRED PRIOR TO INJECTION; CONSULT MANUFACTURER.
4. WHERE EXISTING CONCRETE COATING IS PRESENT, REMOVE IN A NEAT MANNER TO THE LIMITS REQUIRED TO PERFORM REPAIRS IN ACCORDANCE WITH MANUFACTURER'S RECOMMENDATIONS.
5. PRIOR TO APPLICATION, CONTRACTOR SHALL ARRANGE PRE-INSTALLATION MEETING ONSITE BETWEEN APPLICATOR, ENGINEER AND MANUFACTURER'S REPRESENTATIVE TO REVIEW:
   - SUBSTRATE CONDITION
   - PROCEDURES FOR SUBSTRATE PREPARATION
   - APPLICATION LIMITS
   - INSTALLATION METHODS
   - CURING REQUIREMENTS DURATION

   PROVIDE ALL PARTIES A MINIMUM OF TWO WEEKS' NOTICE FOR SCHEDULING
6. INCLUDES THE PROVIDING OF ALL LABOR, MATERIALS AND EQUIPMENT NECESSARY TO PERFORM ALL WORK ASSOCIATED WITH PRESSURE INJECTION OF THE CRACKS/JOINTS. CONTRACTOR SHALL BE PAID IN FULL FOR ALL COSTS ASSOCIATED WITH THIS WORK AFTER COMPLETION OF THE WORK. ITEMS INCLUDED (NOT PAID FOR SEPARATELY):
   - ROUTING OUT AND THOROUGHLY CLEANING THE CONCRETE SURFACE ALONG AND WITHIN THE CRACK/JOINT TO THE SATISFACTION OF THE ENGINEER
   - PRESSURE INJECTION OF WALL OR SLAB CRACKS/JOINTS
   - REMOVING THE INJECTION PORTS AND BRIDGING MATERIAL
   - GRIND SMOOTH TO FINISH

PRESSURE INJECTION OF WEEPING CRACKS/JOINTS REPAIR TYPE 2B

N.T.S.

CONCRETE SURFACE REPAIR NOTES:

1. REMOVE CONCRETE TO DEPTH AS SHOWN, TAKING CARE NOT TO DAMAGE EXISTING REINFORCEMENT TO REMAIN.
   - INTENTIONALLY ROUGHEN AND THOROUGHLY CLEAN TO CONCRETE SURFACE PROFILE (CSP) 7.
   - EXPOSED REINFORCEMENT SHALL BE CLEANED OF RUST TO BARE METAL IMMEDIATELY BEFORE INSTALLING PATCH MATERIAL.
   - AIRBLAST OR VACUUM AS FINAL STEP TO REMOVE REMAINING FINES PRIOR TO INSTALLING PATCH MATERIAL.
   - APPLY CORROSION INHIBITOR, "ARMATEC 110 EPOCEM" BY SIKA CORP. OR APPROVED EQUAL, PRIOR TO PATCH PLACEMENT.

2. UPON REMOVING DETERIORATED CONCRETE, IT MAY BE DETERMINED BY ENGINEER THAT A PORTION OF THE EXISTING REINFORCEMENT REQUIRES REPLACEMENT.
   - FOR ANY EXISTING REINFORCEMENT THAT CANNOT BE SALVAGED, REPLACE IN KIND.
   - FOR ALL REINFORCEMENT TO BE REPLACED, DRILL & ADHESIVE ANCHOR INTO EXISTING CONCRETE. EMBEDMENT DEPTH SHALL BE 6" OR PER ADHESIVE ANCHOR MANUFACTURER'S RECOMMENDATIONS FOR GIVEN BAR DIAMETER, WHICHEVER IS GREATER.

3. INCLUDES THE PROVIDING OF ALL LABOR, MATERIALS AND EQUIPMENT NECESSARY TO PERFORM ALL WORK ASSOCIATED WITH THE REMOVAL AND OFF-SITE DISPOSAL OF UNSOUND CONCRETE AND THE PROVIDING, INSTALLATION, FINISHING AND CURING OF THE REPAIR MATERIALS AND ALL ASSOCIATED REPAIR ITEMS AS NOTED ABOVE. CONTRACTOR SHALL BE PAID IN FULL FOR ALL COSTS ASSOCIATED WITH THIS WORK AFTER COMPLETION OF THE WORK. ITEMS INCLUDED (NOT PAID FOR SEPARATELY):
   - CONTRACTOR SHALL PROVIDE ALL ACCESS LADDERS, CONFINED SPACE ENTRY EQUIPMENT AND SCAFFOLDING NECESSARY FOR ENGINEER'S DETERMINATION OF LIMITS OF UNSOUND CONCRETE AREAS.
   - REMOVAL AND OFF-SITE DISPOSAL OF ALL UNSOUND, SPALLED, DETERIORATED AND DELAMINATED CONCRETE AREAS.
   - INTENTIONALLY ROUGHEN AND THOROUGHLY CLEAN THE EXISTING CONCRETE SURFACE TO THE SATISFACTION OF THE ENGINEER.
   - PROVIDING, INSTALLATION, FINISHING AND CURING OF ALL PATCHING REPAIR MATERIALS AND METHODS AS INDICATED ABOVE.

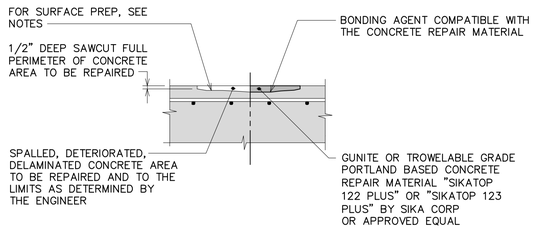

EXISTING & REMOVAL PROPOSED

DEPTH: 1" OR LESS CONCRETE SURFACE REPAIR TYPE 3A

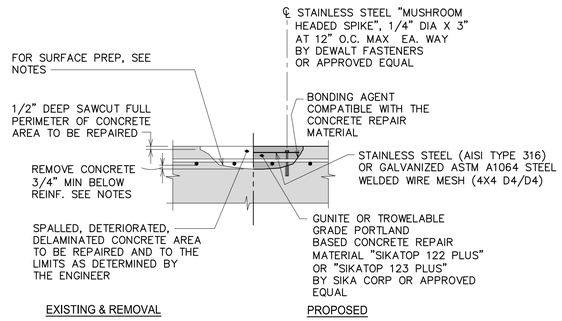

EXISTING & REMOVAL PROPOSED

DEPTH: GREATER THAN 1" CONCRETE SURFACE REPAIR TYPE 3B

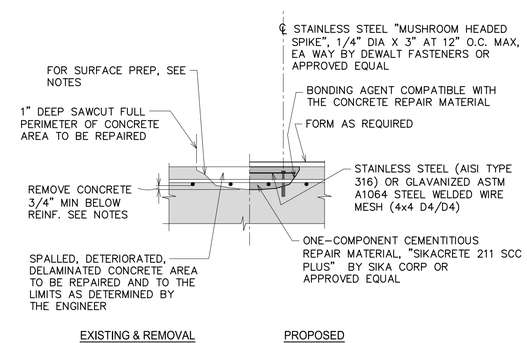

EXISTING & REMOVAL PROPOSED

DEPTH: 3" OR GREATER CONCRETE SURFACE REPAIR TYPE 3C

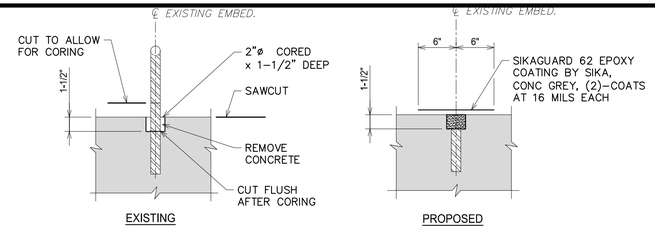

NOTES:

1. INCLUDES THE PROVIDING OF ALL LABOR, MATERIALS AND EQUIPMENT NECESSARY TO PERFORM ALL WORK ASSOCIATED WITH THE REMOVAL AND OFF-SITE DISPOSAL OF CORED MATERIALS AND THE PROVIDING, INSTALLATION, FINISHING AND CURING OF THE GROUT MATERIALS AND ALL ASSOCIATED REPAIR ITEMS AS NOTED ABOVE. CONTRACTOR SHALL BE PAID IN FULL FOR ALL COSTS ASSOCIATED WITH THIS WORK AFTER COMPLETION OF THE WORK.
   - SCAFFOLDING AS NECESSARY.
2. ALL EXPOSED CUT STEEL REINFORCEMENT SHALL BE CORED AND REPAIRED.

REMOVAL OF EMBEDMENTS REPAIR TYPE 4

ALUMINUM PANEL REPAIR NOTES:

1. EXISTING GRATING SHALL BE REPLACED WITH PROPOSED ALUMINUM PANELS.
2. DETAILED PROPOSED ALUMINUM PANEL SHOP DRAWINGS SHALL BE APPROVED BY THE ENGINEER PRIOR TO FABRICATION.
3. PROPOSED ALUMINUM PANELS SHALL BE DESIGNED IN ACCORDANCE WITH SHEET S-1 AND SPEC 11396.
4. EXISTING GRATING REPLACED WITH PROPOSED ALUMINUM PANELS SHALL BE SALVAGED AND STORED ON SITE. SEE SHEET DS-1.
5. THE EXISTING GRATING SEAT EMBEDDED INTO THE CONCRETE SHALL BE REUSED FOR SEATING OF THE PROPOSED ALUMINUM PANELS.
6. CONTRACTOR SHALL BE PAID FOR ACTUAL AS-CONSTRUCTED QUANTITIES USED. SEE MISCELLANEOUS QUANTITIES TABLE FOR ESTIMATED BID QUANTITIES.

ALUMINUM PANEL REPLACEMENT TYPE 5

NOTE:
CONTRACTOR SHALL PROVIDE ALL ACCESS LADDERS, CONFINED SPACE ENTRY EQUIPMENT AND SCAFFOLDING NECESSARY FOR ENGINEER'S DETERMINATION OF LIMITS OF UNSOUND CONCRETE AREAS.

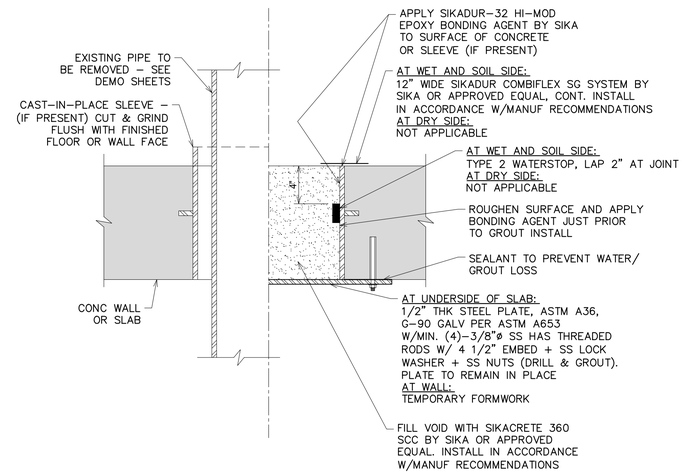

EXISTING AND REMOVAL PROPOSED

APPLIES TO OPENINGS 36" DIA MAX

CONCRETE WALL OR SLAB INFILL DETAIL

N.T.S.

811 Know what's below. Call before you dig.

REV.	DESCRIPTION	DATE	DRAWN	CHECKED
	50% DESIGN SUBMITTAL	10-01-2021	PMH	SDH
	70% DESIGN SUBMITTAL	10-29-2021		
	90% DESIGN SUBMITTAL	11-22-2021		
	ISSUED FOR BIDS SET	12-13-2021		

CITY OF ANN ARBOR
PUBLIC SERVICES
301 EAST HURON STREET
P.O. BOX 8647
ANN ARBOR, MI 48107-8647
734.794.6410
www.a2gov.org

PROJECT MANAGEMENT - PUBLIC SERVICES - CITY OF ANN ARBOR

HEADWORKS IMPROVEMENTS PROJECT

REPAIR DETAILS

SCALE AS NOTED

DRAWING No. 305

SHEET No. S-2

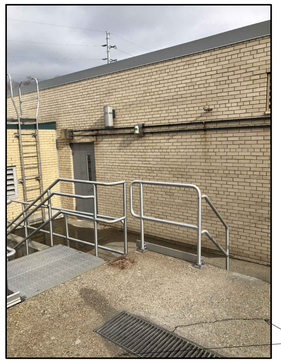

PHOTO PH1 S-1



PHOTO PH2 S-1

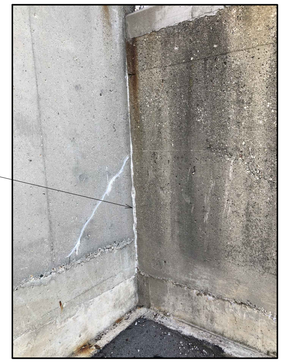

PHOTO PH3 S-1



PHOTO PH4 S-1



PHOTO PH5 S-1



PHOTO PH6 S-1



PHOTO PH7 S-1

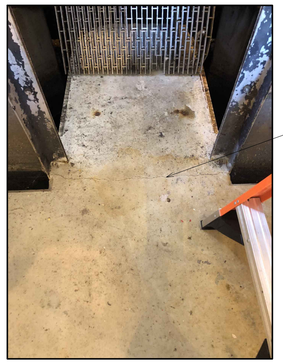

PHOTO PH8 S-4A/S-4B

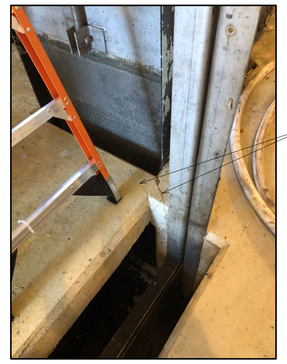

PHOTO PH9 S-4A/S-4B

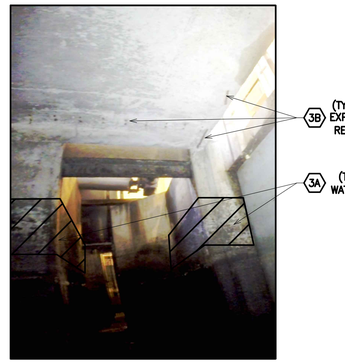

PHOTO PH10 S-4A/S-4B

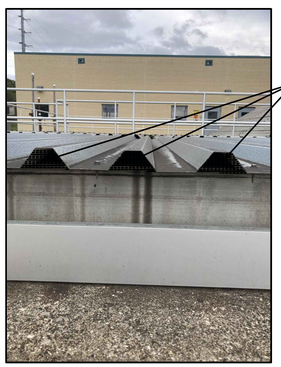

(TYP - 10 PANEL ENDS)

PHOTO PH11 S-1

811 Know what's below. Call before you dig.

	DATE	DRAWN	CHECKED
ISSUED FOR BIDS SET	12-13-2021	PMH	SDH
90% DESIGN SUBMITTAL	11-22-2021	PMH	SDH
70% DESIGN SUBMITTAL	10-29-2021	PMH	SDH
50% DESIGN SUBMITTAL	10-01-2021	PMH	SDH
DESCRIPTION	DATE	DRAWN	CHECKED
REV.			

CITY OF ANN ARBOR
PUBLIC SERVICES
301 EAST HURON STREET
P.O. BOX 8647
ANN ARBOR, MI 48107-8647
(734) 794-6410
www.a2gov.org

PROJECT MANAGEMENT - PUBLIC SERVICES - CITY OF ANN ARBOR

HEADWORKS IMPROVEMENTS PROJECT

REPAIR PHOTOS

SCALE AS NOTED

DRAWING No. 307

SHEET No. S-3

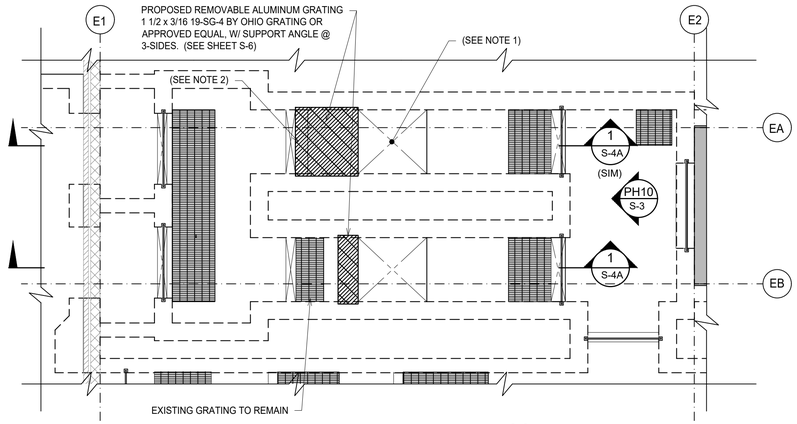

(NORTH SCREEN CHANNELS)

PARTIAL PLAN AT EL. 748.00

SCALE: 3/16" = 1'-0"

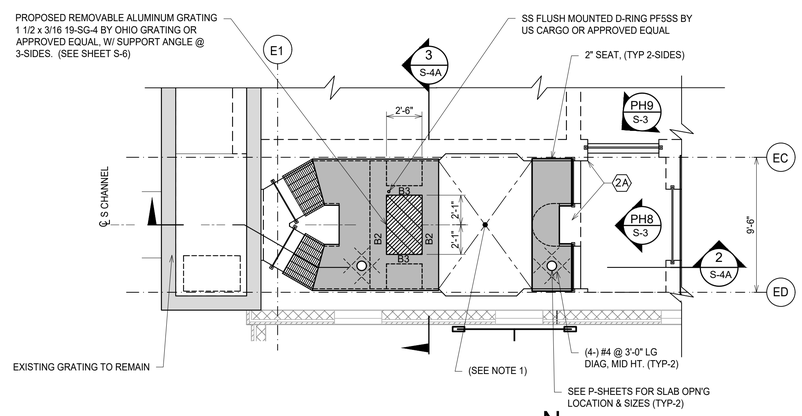

(SOUTH SCREEN CHANNELS)

PARTIAL PLAN AT EL. 748.50

SCALE: 3/16" = 1'-0"

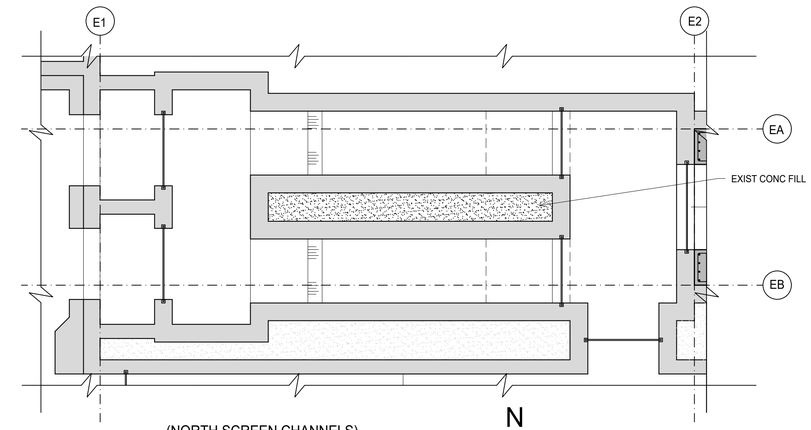

(NORTH SCREEN CHANNELS)

PARTIAL PLAN AT EL. 742.00

SCALE: 3/16" = 1'-0"

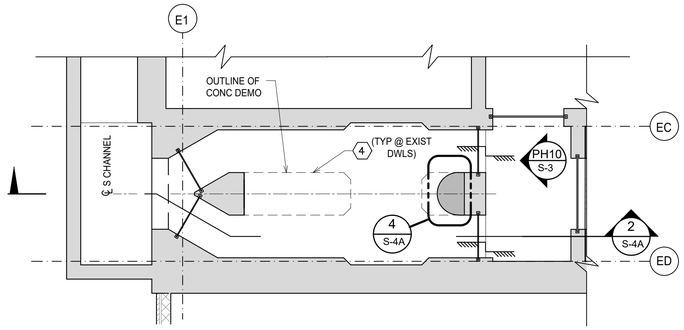

(SOUTH SCREEN CHANNELS)

PARTIAL PLAN AT EL. 742.50

SCALE: 3/16" = 1'-0"

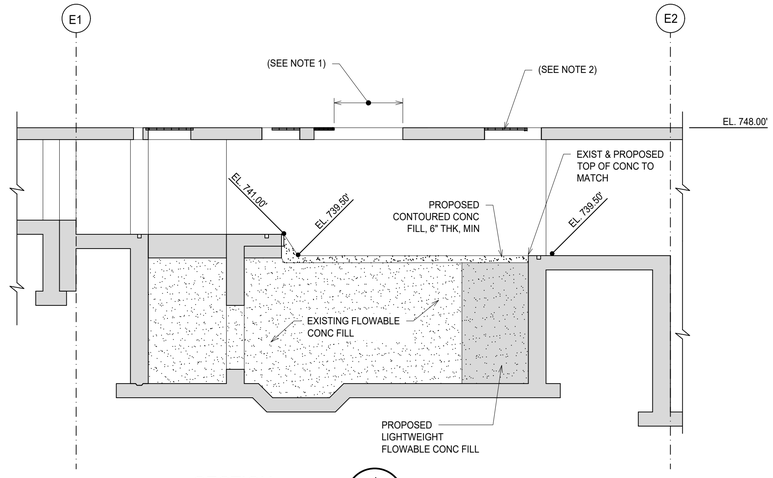

SECTION 1

SCALE: 3/16" = 1'-0"

S-1/S-4A

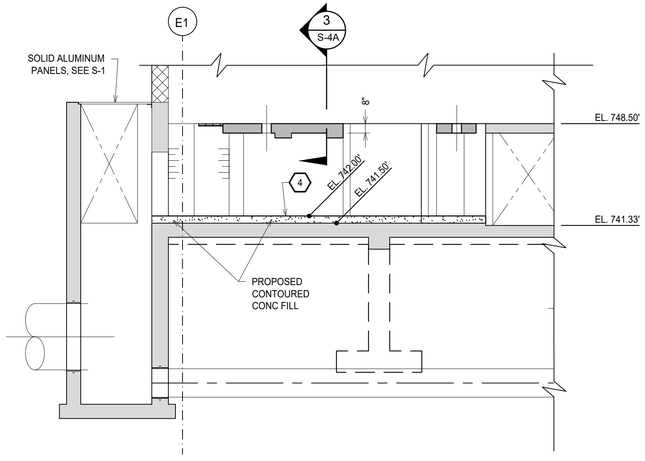

SECTION 2

SCALE: 3/16" = 1'-0"

S-1/S-4A

SCREEN CHANNELS MISCELLANEOUS QUANTITIES

	PROPOSED WORK ITEM DESCRIPTION (SEE S-2)	UNIT	QUANTITY
2A	PRESSURE INJECTION OF NON-WEEPING CRACKS REPAIR TYPE 2A	LF	100
3A	CONCRETE SURFACE REPAIR TYPE 3A	SF	300
3B	CONCRETE SURFACE REPAIR TYPE 3B	SF	100

NOTES:
THE QUANTITIES FOR THE WORK ITEM DESCRIPTIONS ABOVE ARE APPROXIMATE. CONTRACTOR SHALL BE PAID IN FULL FOR ACTUAL AS-CONSTRUCTED AMOUNTS USED ABOVE/BELOW BASE QUANTITY SHOWN. CONTRACTOR TO FILL IN PRICING SHEET ON THE BID FORM IN SPEC SECTION 00300.

NOTES:

1. DETERMINE DIMENSIONS AND BEAM LOCATIONS PER ENGINEER APPROVED SCREEN MECHANISM SHOP DRAWINGS.
2. FOR PROPOSED ALUMINUM GRATING, SEE SHT S-6 AND SPECIFICATIONS.

BEAM SCHEDULE

MARK	SHAPE	HT	W	TOP	BOTT	STIRRUPS
B2	TYPE A	12"	14"	(2)- #5	(2)- #6	(10) - #3 @ 4" @ EA END
B3	TYPE A	12"	12"	(2)- #5	(2)- #6	

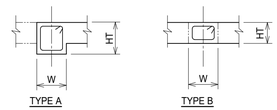

NOTES:

1. TOP & BOTTOM REINF SHALL HAVE 90° HOOKS AT DISCONTINUED ENDS INTO PROPOSED CONC.
2. TOP & BOTTOM REINF SHALL HAVE MATCHING DOWEL, (DRILL AND GROUT) W/ 5" EMBEDMENT AND DISCONTINUED ENDS INTO EXIST CONC.

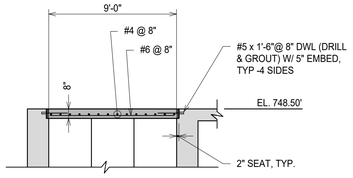

SECTION 3

SCALE: 3/16" = 1'-0"

S-4A

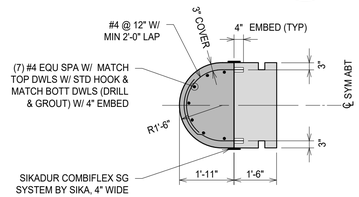

DETAIL 4

SCALE: 3/16" = 1'-0"

S-4A

NOTE:
ALL EXISTING CONCRETE SURFACES IN CONTACT WITH PROPOSED CONCRETE SHALL BE INTENTIONALLY ROUGHENED TO ¼" AMPLITUDE AND THOROUGHLY CLEANED TO THE SATISFACTION OF THE ENGINEER. APPLY WELD-CRETE BONDING AGENT TO EXISTING CONCRETE SURFACES JUST PRIOR TO PROPOSED CONCRETE PLACEMENT.

3/16"=1'-0" 0 1' 2' 4' 8'

FOR TRUE SCALE PLOT THIS SHEET TO 34" x 22" PAPER SIZE

Know what's below. Call before you dig. 811

REV.	DESCRIPTION	DATE	DRAWN	CHECKED
	ISSUED FOR BIDS SET	12-13-2021	PMH	SDH
	90% DESIGN SUBMITTAL	11-22-2021	PMH	SDH
	70% DESIGN SUBMITTAL	10-29-2021	PMH	SDH
	50% DESIGN SUBMITTAL	10-01-2021		

CITY OF ANN ARBOR
PUBLIC SERVICES
301 E. HURON STREET
P.O. BOX 8647
ANN ARBOR, MI 48107-8647
734.794.6410
www.a2gov.org

PROJECT MANAGEMENT - PUBLIC SERVICES - CITY OF ANN ARBOR

HEADWORKS IMPROVEMENTS PROJECT

SCREEN PLANS, SECTIONS & DETAILS (DUPERON)

SCALE: AS NOTED

DRAWING No. 314

SHEET No. S-4A

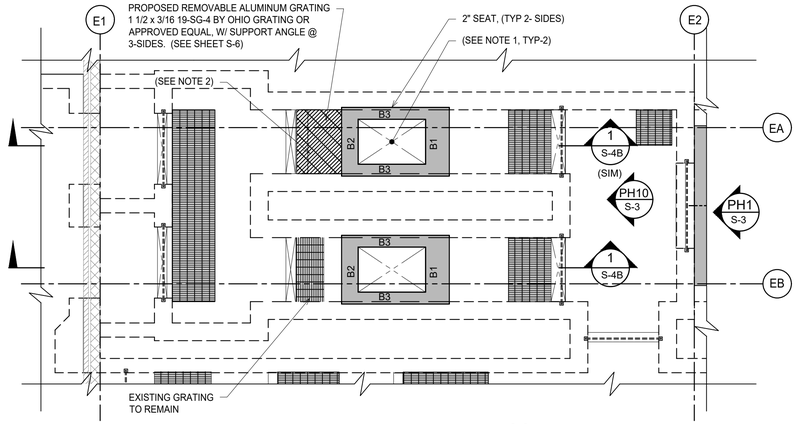

(NORTH SCREEN CHANNELS)

PARTIAL PLAN AT EL. 748.00

SCALE: 3/16" = 1'-0"

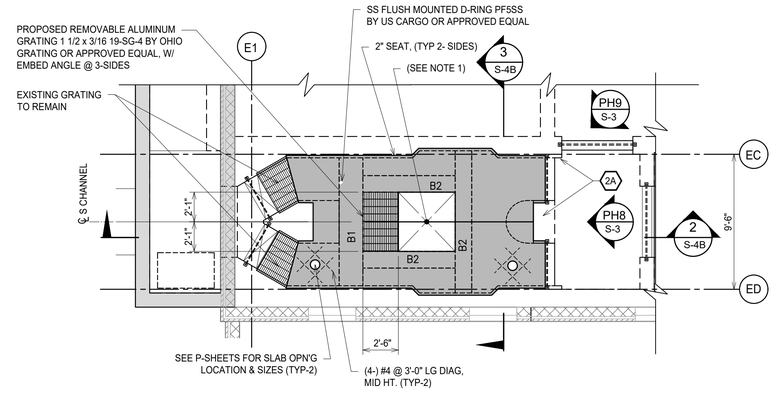

(SOUTH SCREEN CHANNELS)

PARTIAL PLAN AT EL. 748.50

SCALE: 3/16" = 1'-0"

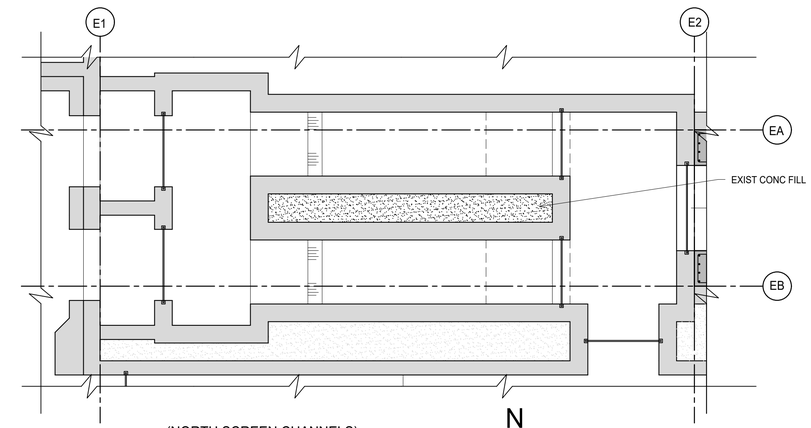

(NORTH SCREEN CHANNELS)

PARTIAL PLAN AT EL. 742.00

SCALE: 3/16" = 1'-0"

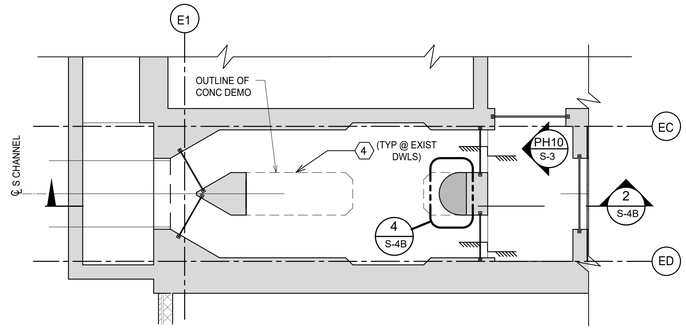

(SOUTH SCREEN CHANNELS)

PARTIAL PLAN AT EL. 742.50

SCALE: 3/16" = 1'-0"

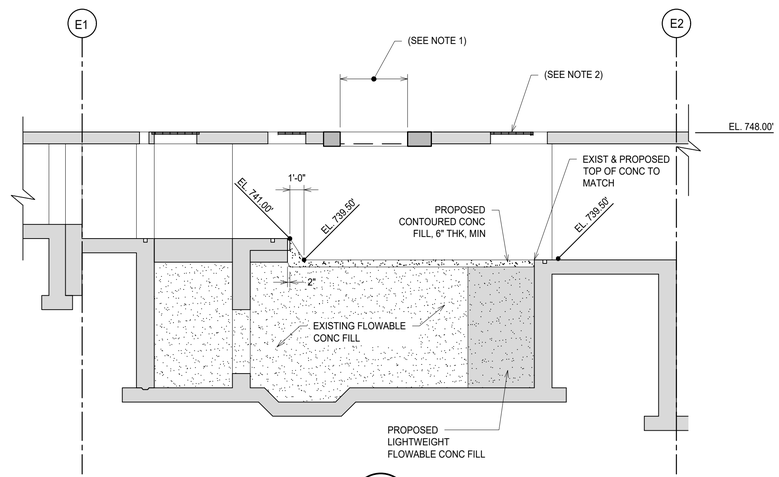

SECTION 1

SCALE: 3/16" = 1'-0" — S-1/S-4B

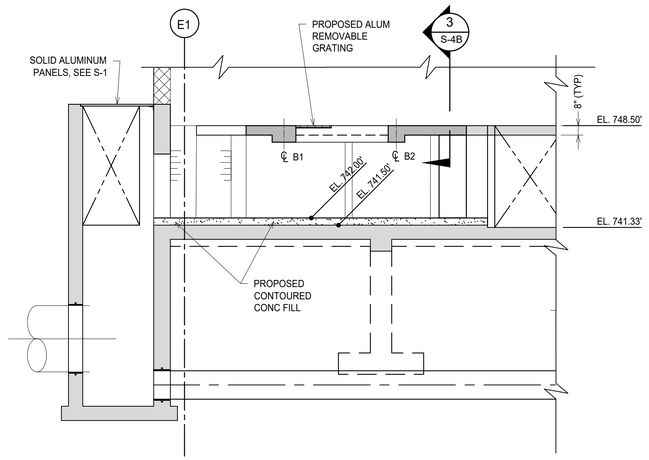

SECTION 2

SCALE: 3/16" = 1'-0" — S-1/S-4B

SCREEN CHANNELS MISCELLANEOUS QUANTITIES

	PROPOSED WORK ITEM DESCRIPTION (SEE S-2)	UNIT	QUANTITY
2A	PRESSURE INJECTION OF NON-WEEPING CRACKS REPAIR TYPE 2A	LF	100
3A	CONCRETE SURFACE REPAIR TYPE 3A	SF	300
3B	CONCRETE SURFACE REPAIR TYPE 3B	SF	100

NOTES:
THE QUANTITIES FOR THE WORK ITEM DESCRIPTIONS ABOVE ARE APPROXIMATE. CONTRACTOR SHALL BE PAID IN FULL FOR ACTUAL AS-CONSTRUCTED AMOUNTS USED ABOVE/BELOW BASE QUANTITY SHOWN. CONTRACTOR TO FILL IN PRICING SHEET ON THE BID FORM IN SPEC SECTION 00300.

NOTES:

1. DETERMINE DIMENSIONS & BEAM LOCATIONS PER ENGINEER APPROVED SCREEN MECHANISM SHOP DRAWINGS.
2. FOR PROPOSED ALUMINUM GRATING, SEE SHT S-6 AND SPECIFICATIONS

BEAM SCHEDULE

MARK	SHAPE	HT	W	TOP	BOTT	STIRRUPS
B1	TYPE A	12"	1'-8"	(3)- #5	(3)- #6	(11) - #3 @ 4" @ EA END #3 @ 8"
B2	TYPE A	12"	14"	(2)- #5	(2)- #6	(10) - #3 @ 4" @ EA END
B3	TYPE A	12"	8" MIN.	(2)- #5	(2)- #6	

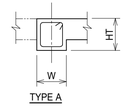

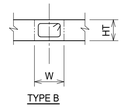

NOTES:

1. TOP & BOTTOM REINF SHALL HAVE 90° HOOKS AT DISCONTINUED ENDS INTO PROPOSED CONC.
2. TOP & BOTTOM REINF SHALL HAVE MATCHING HORIZ DOWEL, (DRILL AND GROUT) W/ 5" EMBEDMENT AND DISCONTINUED ENDS INTO EXIST CONC.

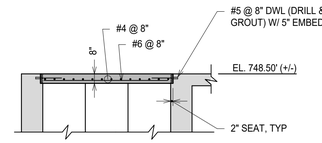

SECTION 3

SCALE: 3/16" = 1'-0" — S-4B

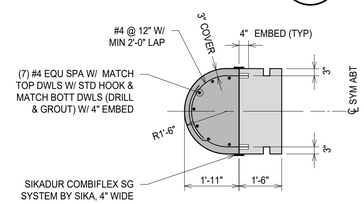

DETAIL 4

SCALE: 3/16" = 1'-0" — S-4B

NOTE:
ALL EXISTING CONCRETE SURFACES IN CONTACT WITH PROPOSED CONCRETE SHALL BE INTENTIONALLY ROUGHENED TO ¼" AMPLITUDE AND THOROUGHLY CLEANED TO THE SATISFACTION OF THE ENGINEER. APPLY WELD-CRETE BONDING AGENT TO EXISTING CONCRETE SURFACES JUST PRIOR TO PROPOSED CONCRETE PLACEMENT.

3/16"=1'-0" 0 1' 2' 4' 8'

FOR TRUE SCALE PLOT THIS SHEET TO 34" x 22" PAPER SIZE

811 Know what's below. Call before you dig.

REV.	DESCRIPTION	DATE	DRAWN	CHECKED
	50% DESIGN SUBMITTAL	10-01-2021	PMH	SDH
	70% DESIGN SUBMITTAL	10-29-2021	PMH	SDH
	90% DESIGN SUBMITTAL	11-22-2021	PMH	SDH
	ISSUED FOR BIDS SET	12-13-2021	PMH	SDH

CITY OF ANN ARBOR
PUBLIC SERVICES
301 EAST HURON STREET
P.O. BOX 8647
ANN ARBOR, MI 48107-8647
(734) 794-6410
www.a2gov.org

PROJECT MANAGEMENT - PUBLIC SERVICES - CITY OF ANN ARBOR

HEADWORKS IMPROVEMENTS PROJECT

SCREEN PLANS, SECTIONS & DETAILS (HYDRO-DYNE)

SCALE: AS NOTED

DRAWING No.: 314

SHEET No.: S-4B

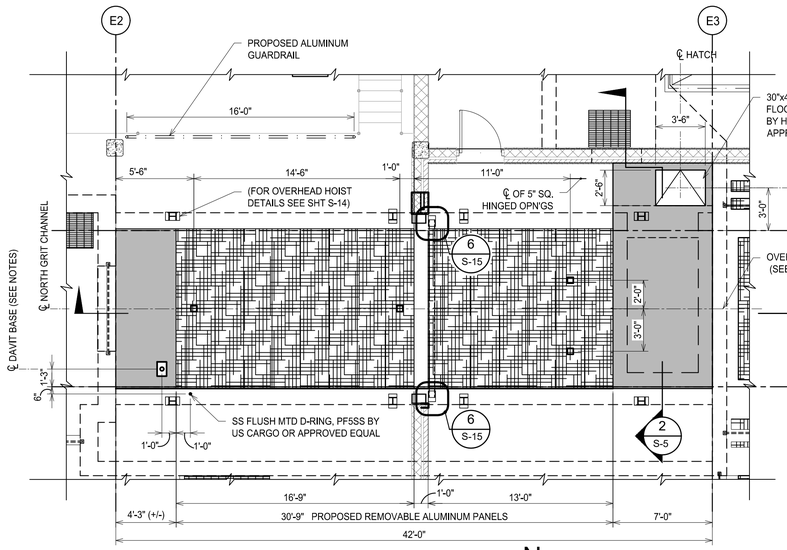

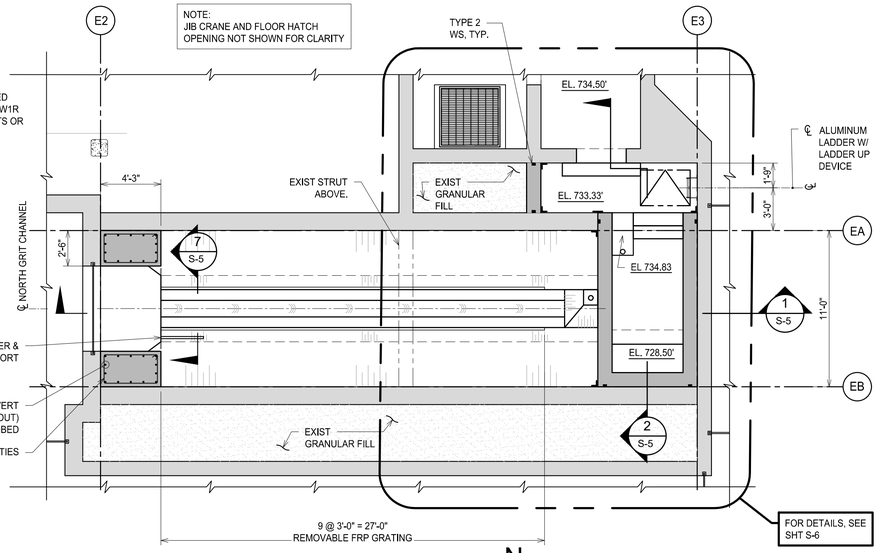

GRIT CHANNELS MISCELLANEOUS QUANTITIES

	PROPOSED WORK ITEM DESCRIPTION (SEE S-2)	UNIT	QUANTITY
2A	PRESSURE INJECTION OF NON-WEEPING CRACKS REPAIR TYPE 2A	LF	100
2B	PRESSURE INJECTION OF WEEPING CRACKS/ JOINTS REPAIR TYPE 2B	LF	200
3A	CONCRETE SURFACE REPAIR TYPE 3A	SF	300
3B	CONCRETE SURFACE REPAIR TYPE 3B	SF	50
4	REMOVAL OF EMBEDMENTS REPAIR TYPE 4	LS	1

NOTES:
THE QUANTITIES FOR THE WORK ITEM DESCRIPTIONS ABOVE ARE APPROXIMATE. CONTRACTOR SHALL BE PAID IN FULL FOR ACTUAL AS-CONSTRUCTED AMOUNTS USED ABOVE/BELOW BASE QUANTITY SHOWN. CONTRACTOR TO FILL IN PRICING SHEET ON THE BID FORM IN SPEC SECTION 00300.

DAVIT BASE NOTES:

1. DAVIT BASE REFERS TO A FLOOR MOUNTED CAST-N-PLACE SLEEVE DAVIT BASE WITH A SLEEVE CAP. THE DAVIT BASE SHALL BE CAST FLUSH TO THE TOP OF THE CONCRETE.
2. THE DAVIT BASE SHALL BE COMPATIBLE WITH THE OWNERS EXISTING DAVIT ARMS, AND FABRICATED BY THE SAME MANUFACTURER AS THE EXISTING DAVIT ARMS.
3. THE DAVIT BASE SHALL BE STAINLESS STEEL.
4. THE PROPOSED STRUCTURE AND MOUNTING HARDWARE IS DESIGNED TO WITHSTAND A 90,000 IN-LBS MOMENT AND 5,000 LBS VERTICAL LOAD (ULTIMATE).

PARTIAL PLAN AT EL. 748.50

SCALE: 3/16" = 1'-0"

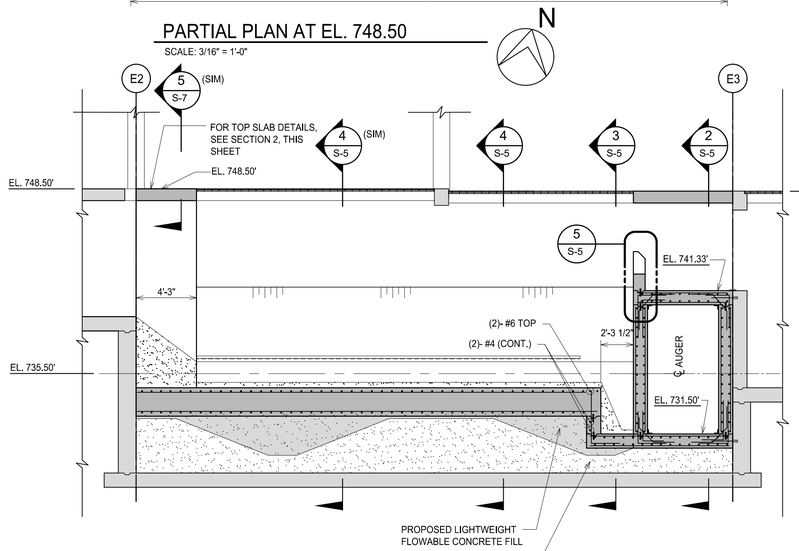

SECTION 1

SCALE: 3/16" = 1'-0"

S-1/S-5

PARTIAL PLAN AT EL. 739.00

SCALE: 3/16" = 1'-0"

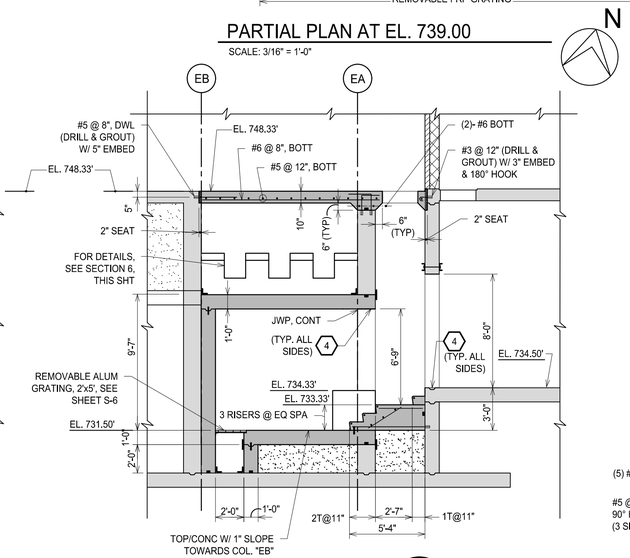

SECTION 2

SCALE: 3/16" = 1'-0"

S-5

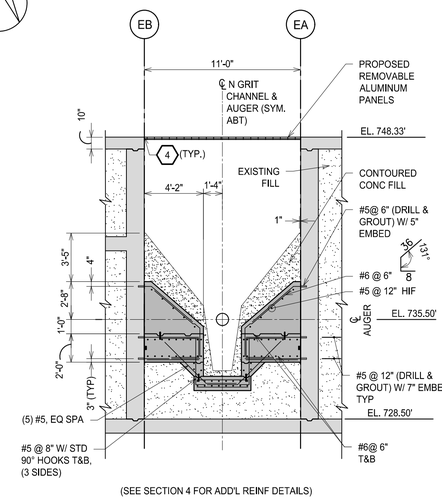

(SEE SECTION 4 FOR ADD'L REINF DETAILS)

SECTION 3

SCALE: 3/16" = 1'-0"

S-5

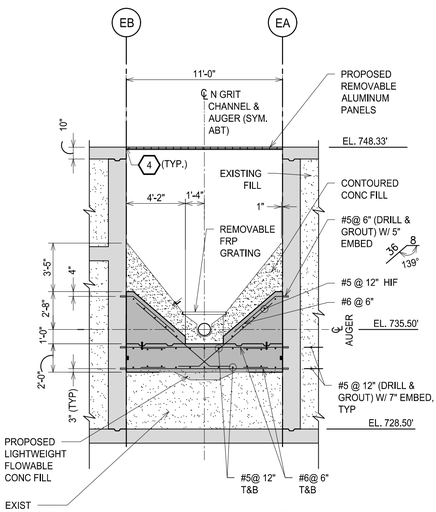

SECTION 4

SCALE: 3/16" = 1'-0"

S-5

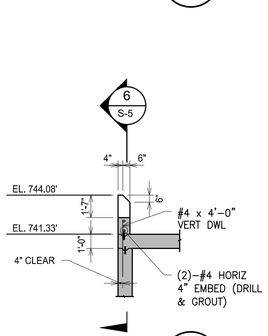

DETAIL 5

SCALE: 3/16" = 1'-0"

S-5

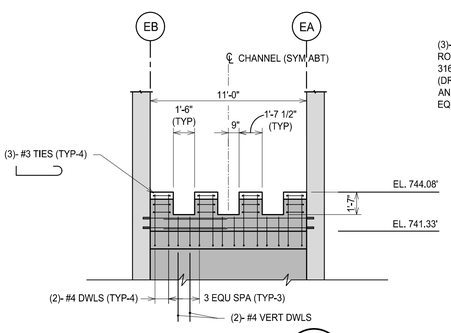

SECTION 6

SCALE: 3/16" = 1'-0"

S-5

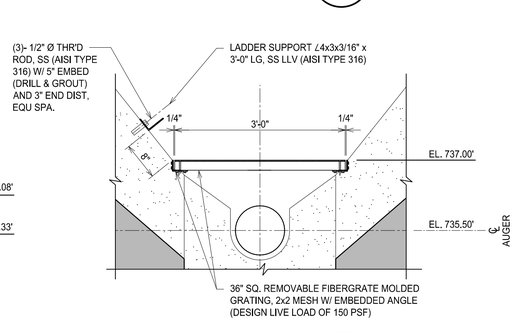

SECTION 7

SCALE: 3/4" = 1'-0"

S-5/S-7

NOTE:
ALL EXISTING CONCRETE SURFACES IN CONTACT WITH PROPOSED CONCRETE SHALL BE INTENTIONALLY ROUGHENED TO ¼" AMPLITUDE AND THOROUGHLY CLEANED TO THE SATISFACTION OF THE ENGINEER. APPLY WELD-CRETE BONDING AGENT TO EXISTING CONCRETE SURFACES JUST PRIOR TO PROPOSED CONCRETE.

3/16"=1'-0" 0 1' 2' 4' 8'

FOR TRUE SCALE PLOT THIS SHEET TO 34" x 22" PAPER SIZE

Know what's below. Call before you dig. 811

REV.	DESCRIPTION	DATE	DRAWN	CHECKED
	ISSUED FOR BIDS SET	12-13-2021	PMH	SDH
	90% DESIGN SUBMITTAL	11-22-2021	PMH	SDH
	70% DESIGN SUBMITTAL	10-29-2021	PMH	SDH
	50% DESIGN SUBMITTAL	10-01-2021	PMH	SDH

CITY OF ANN ARBOR
PUBLIC SERVICES
301 E. HURON STREET
P.O. BOX 8647
ANN ARBOR, MI 48107-8647
734.794.6410
www.a2gov.org

PROJECT MANAGEMENT - PUBLIC SERVICES - CITY OF ANN ARBOR

HEADWORKS IMPROVEMENTS PROJECT

NORTH GRIT PLANS AND SECTIONS

SCALE: AS NOTED

DRAWING No. 320

SHEET No. S-5

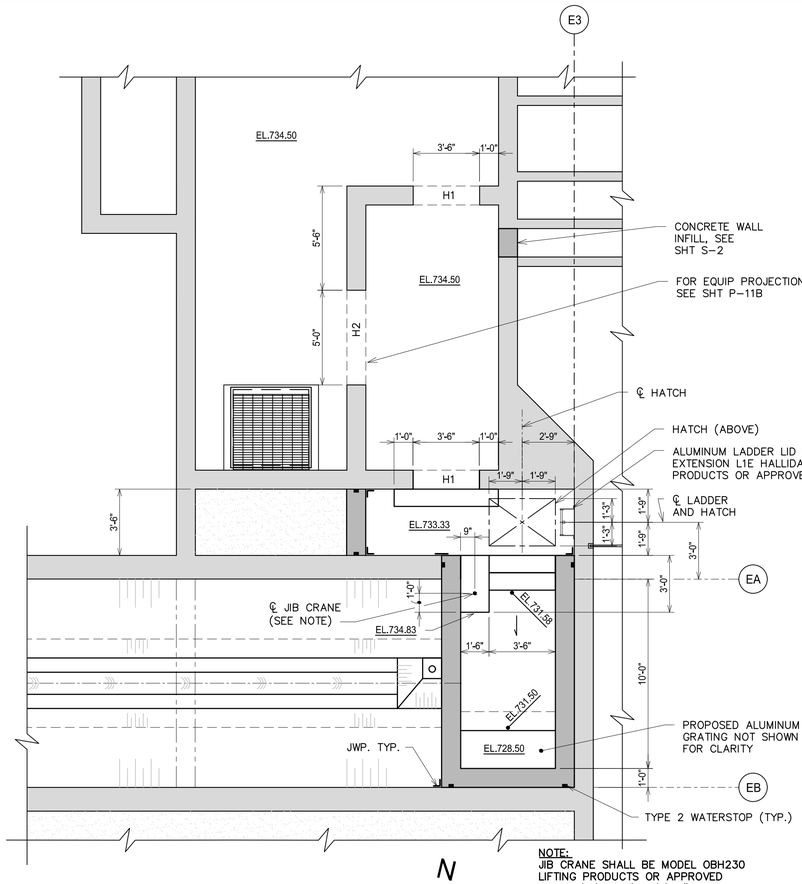

NOTE:
JIB CRANE SHALL BE MODEL OBH230 LIFTING PRODUCTS OR APPROVED EQUAL (1/2 TON) W/3'-6" HORIZ REACH.

N

PARTIAL PLAN @ EL 739.00'

SCALE: 1/4" = 1'-0"

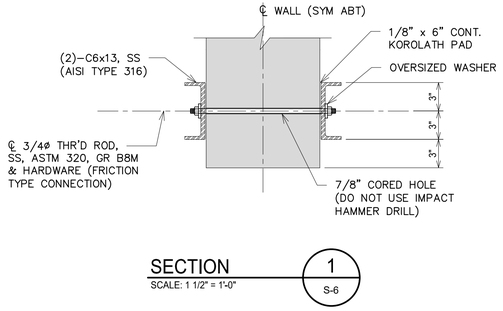

SECTION 1 / S-6

SCALE: 1 1/2" = 1'-0"

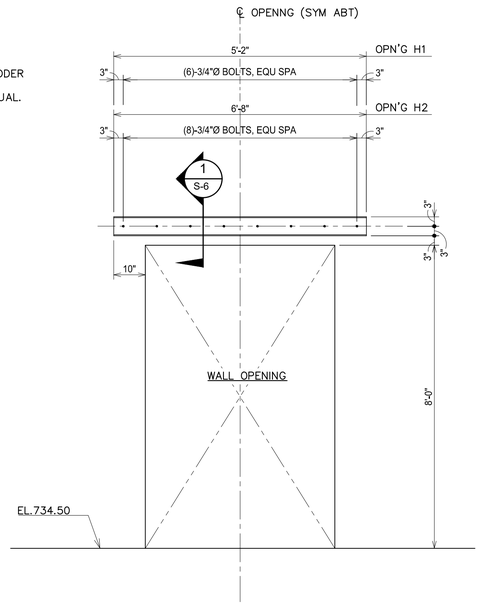

WALL OPENING HEADERS H1 & H2

SCALE: 1/2" = 1'-0"

NOTE:
FULLY INSTALL HEADERS PRIOR TO SAW CUTTING AND DEMO FOR WALL OPENING.

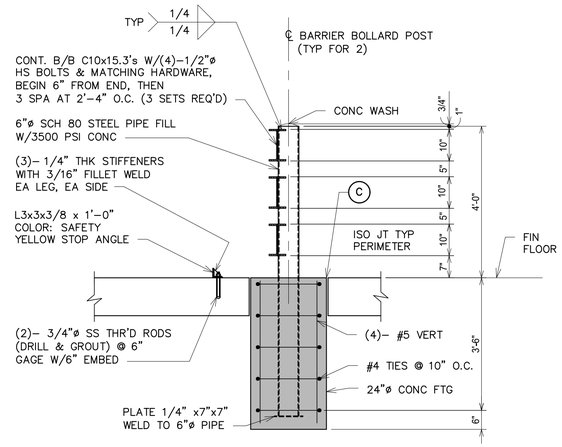

NOTES:
BOLLARDS POSTS, CHANNELS & HARDWARE ARE TO BE PRIMED AND PAINTED SAFETY YELLOW PER SPEC SECTION 09900.

(TYP.-2)

BOLLARD DETAIL

SCALE: 1 1/2" = 1'-0"

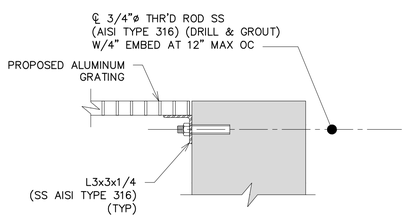

PROPOSED ALUMINUM GRATING AND SEAT

SCALE: 1 1/2" = 1'-0"

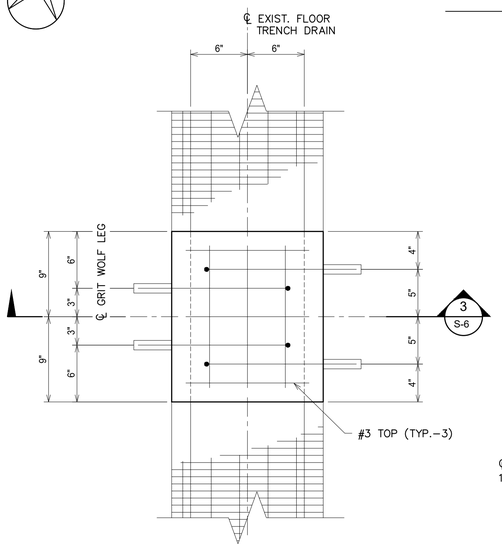

CONC. INFILL DETAIL 2 / S-1

SCALE: 1 1/2" = 1'-0"

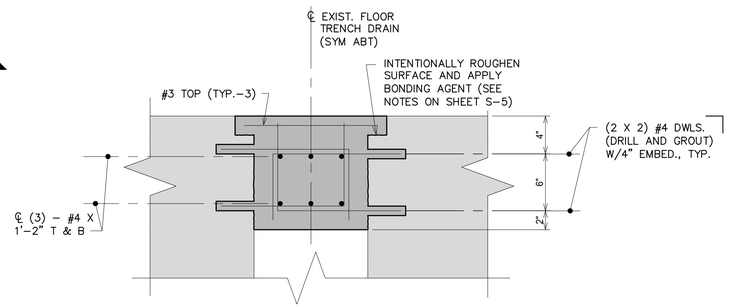

SECTION 3 / S-6

SCALE: 1 1/2" = 1'-0"

3/16"=1'-0" 0 1' 2' 4' 8'

FOR TRUE SCALE PLOT THIS SHEET TO 34" x 22" PAPER SIZE

811 Know what's below. Call before you dig.

REV.	DESCRIPTION	DATE	DRAWN	CHECKED
	ISSUED FOR BIDS SET	12-13-2021		
	90% DESIGN SUBMITTAL	11-22-2021	PMH	SDH
	70% DESIGN SUBMITTAL	10-29-2021		
	50% DESIGN SUBMITTAL	10-01-2021		

CITY OF ANN ARBOR
PUBLIC SERVICES
301 EAST HURON STREET
P.O. BOX 8647
ANN ARBOR, MI 48107-8647
734.794.6410
www.a2gov.org

PROJECT MANAGEMENT - PUBLIC SERVICES - CITY OF ANN ARBOR

HEADWORKS IMPROVEMENTS PROJECT

NORTH GRIT SECTIONS AND DETAILS

SCALE: AS NOTED

DRAWING No.: 322

SHEET No.: S-6

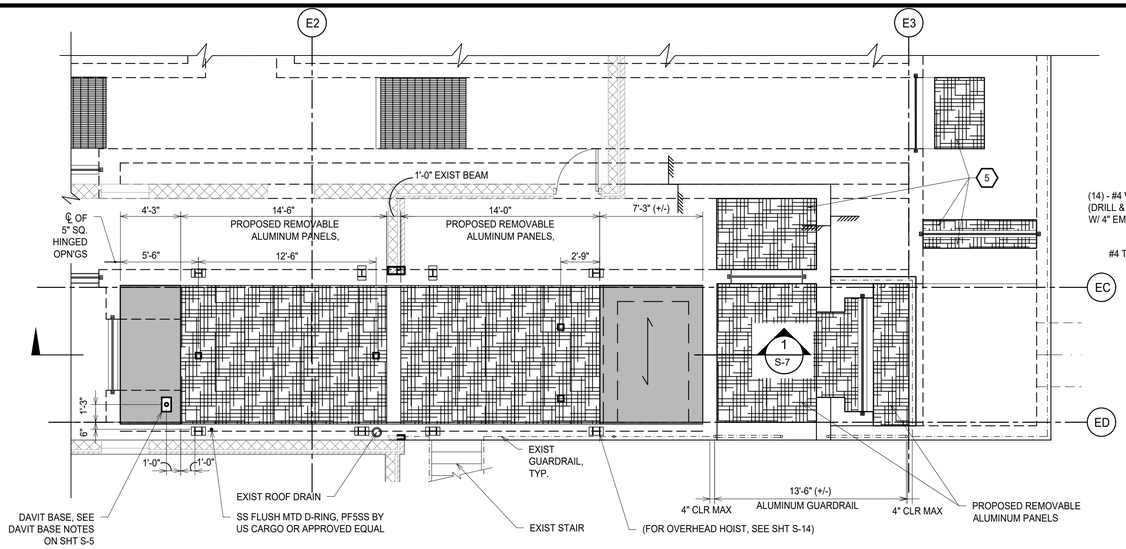

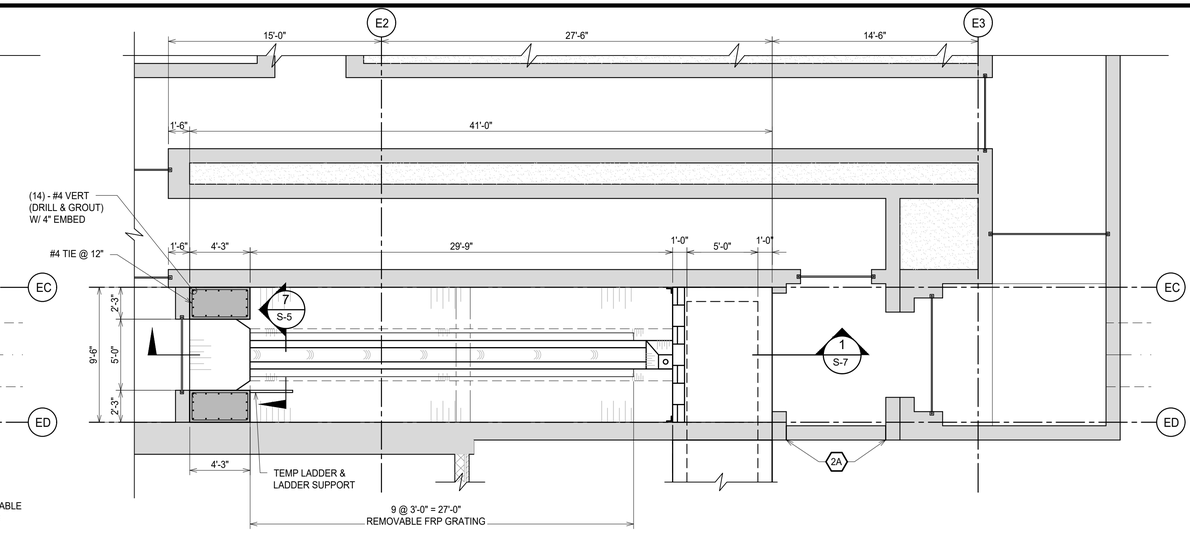

PARTIAL PLAN AT EL. 748.50

SCALE: 3/16" = 1'-0"

N

PARTIAL PLAN AT EL. 745.50

SCALE: 3/16" = 1'-0"

N

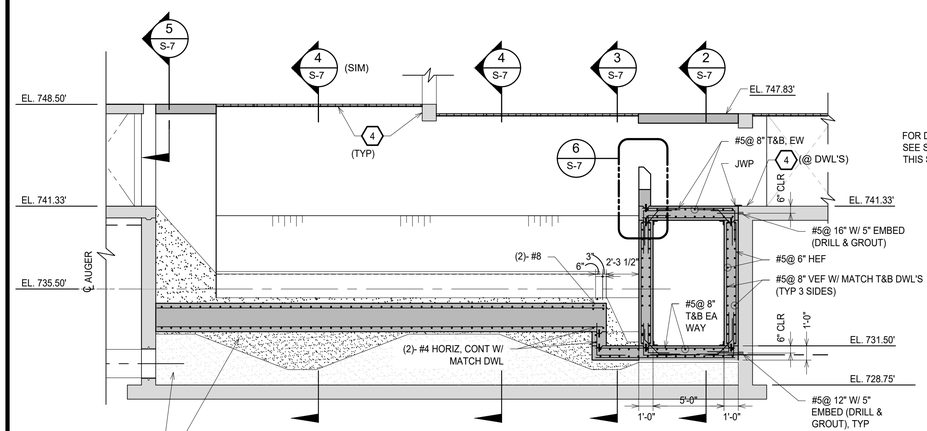

(WEIRS & TROUGHS ARE NOT SHOWN FOR CLARITY)

SECTION 1

SCALE: 3/16" = 1'-0"

S-1, S-7

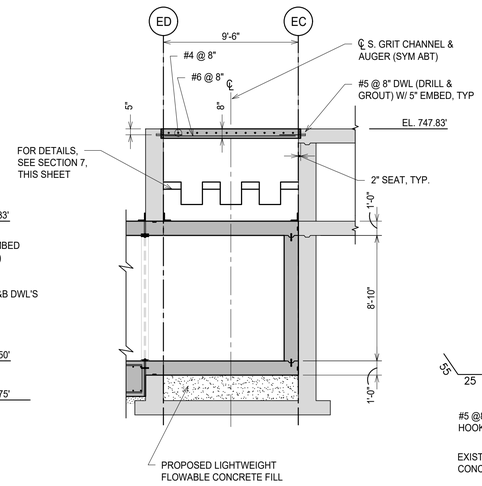

SECTION 2

SCALE: 3/16" = 1'-0"

S-7

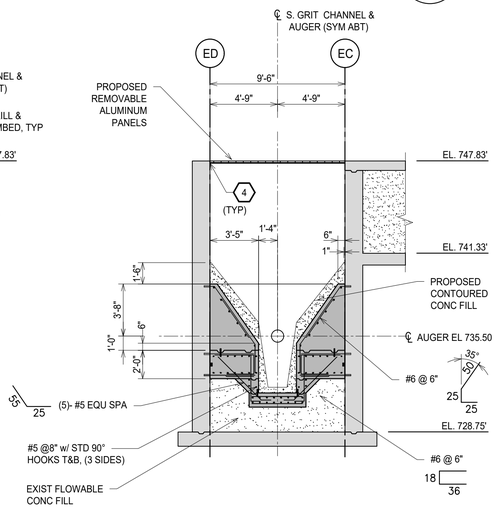

SECTION 3

SCALE: 3/16" = 1'-0"

S-7

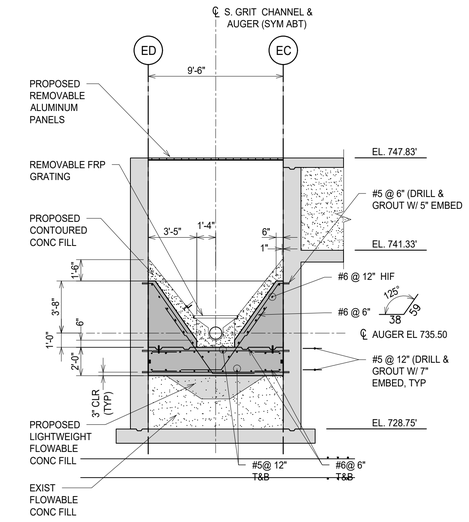

SECTION 4

SCALE: 3/16" = 1'-0"

S-7

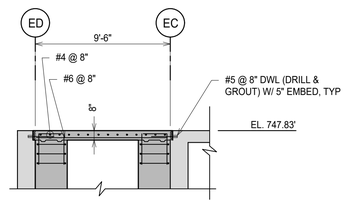

SECTION 5

SCALE: 3/16" = 1'-0"

S-5/S-7

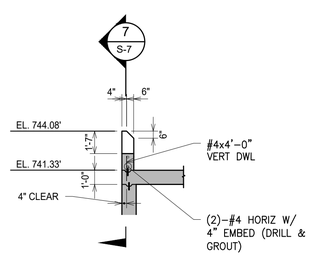

DETAIL

SCALE: 3/16" = 1'-0"

S-7

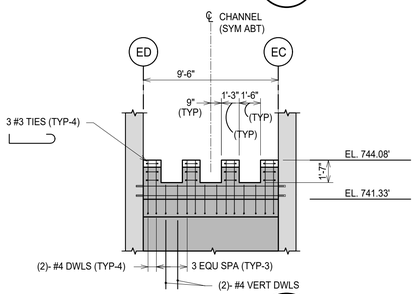

SECTION 7

SCALE: 3/16" = 1'-0"

S-7

NOTE:
ALL EXISTING CONCRETE SURFACES IN CONTACT WITH PROPOSED CONCRETE SHALL BE INTENTIONALLY ROUGHENED TO ¼" AMPLITUDE AND THOROUGHLY CLEANED TO THE SATISFACTION OF THE ENGINEER. APPLY WELD-CRETE BONDING AGENT TO EXISTING CONCRETE SURFACES JUST PRIOR TO PROPOSED CONCRETE.

3/16"=1'-0" 0 1' 2' 4' 8'

FOR TRUE SCALE PLOT THIS SHEET TO 34" x 22" PAPER SIZE

811 Know what's below. Call before you dig.

REV.	DESCRIPTION	DATE	DRAWN	CHECKED
	ISSUED FOR BIDS SET	12-13-2021	PMH	SDH
	90% DESIGN SUBMITTAL	11-22-2021	PMH	SDH
	70% DESIGN SUBMITTAL	10-29-2021	PMH	SDH
	50% DESIGN SUBMITTAL	10-01-2021	PMH	SDH

CITY OF ANN ARBOR
PUBLIC SERVICES
301 EAST HURON STREET
P.O. BOX 8647
ANN ARBOR, MI 48107-8647
734.794.6410
www.a2gov.org

PROJECT MANAGEMENT - PUBLIC SERVICES - CITY OF ANN ARBOR

HEADWORKS IMPROVEMENTS PROJECT

SOUTH GRIT PLANS AND SECTIONS

SCALE: AS NOTED

DRAWING No. 326

SHEET No. S-7

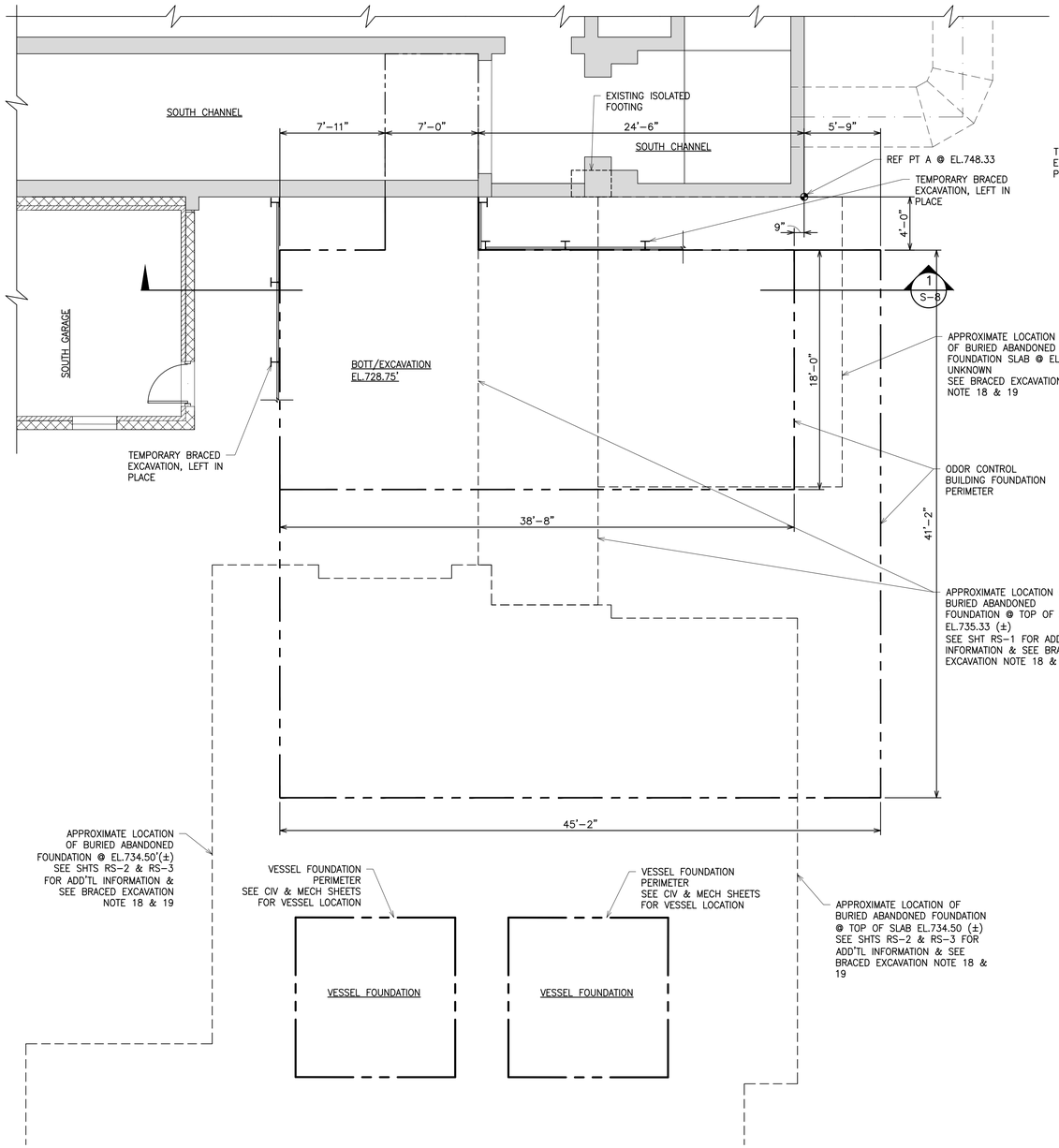

PARTIAL PLAN AT EL. 742.00
SCALE: 3/16" = 1'-0"

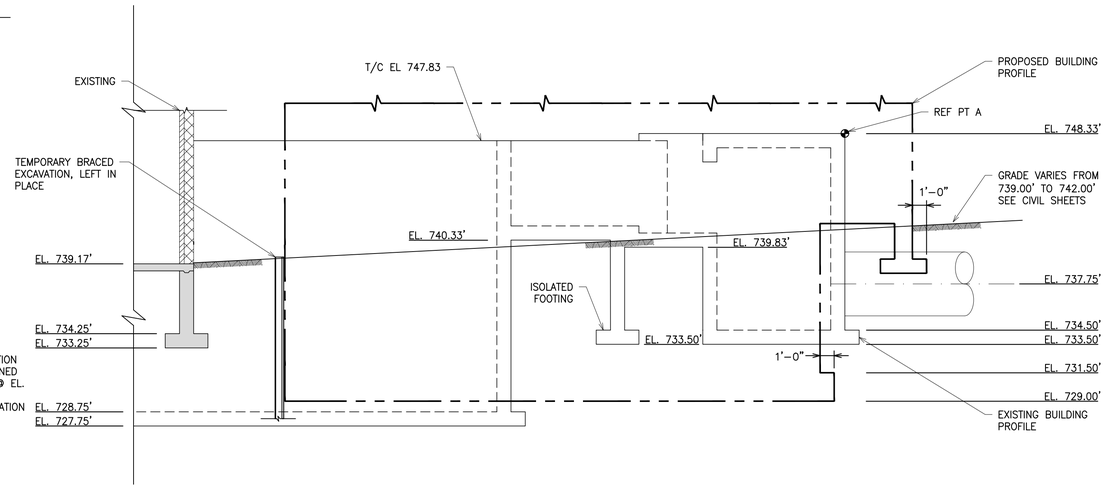

SECTION 1 / S-8
SCALE: 3/16" = 1'-0"

BRACED EXCAVATION NOTES:

1. BRACED EXCAVATIONS FOR THE ODOR CONTROL BUILDING AND VESSEL FOUNDATION SHALL BE DELEGATED TO THE CONTRACTOR, AND DESIGNED IN ACCORDANCE WITH THE MICHIGAN BUILDING CODE AND THE FOLLOWING CRITERIA. THE BRACED EXCAVATION DEPICTED ON THE DRAWINGS IS FOR GRAPHICAL DEPICTION ONLY. THE CONTRACTOR SHALL DETERMINE THE LIMITS OF THE BRACED EXCAVATION.
2. SUBMIT COMPLETE ENGINEERING DRAWINGS FOR BRACED EXCAVATIONS SHOWING MATERIAL, SIZE, AND LOCATION OF COMPONENTS, DETAILS OF CONNECTIONS AND REINFORCEMENT AT OPENINGS, INDICATE PERMANENT AND TEMPORARY INSTALLATIONS. THE CONTRACTOR'S LICENSED PROFESSIONAL ENGINEER REGISTERED IN THE STATE OF MICHIGAN SHALL SIGN AND SEAL THESE DRAWINGS.
3. SUBMIT DESIGN CALCULATIONS PREPARED BY THE CONTRACTOR'S LICENSED PROFESSIONAL ENGINEER REGISTERED IN THE STATE OF MICHIGAN, WHO IS EXPERIENCED IN THE DESIGN OF BRACED EXCAVATIONS IN ACCORDANCE WITH PROJECT NOTES AND SPECIFICATIONS. REFERENCES USED IN THE DEVELOPMENT OF CALCULATIONS SHALL BE NOTED.
4. DEPARTMENT OF THE NAVY. NAVAL FACILITIES ENGINEERING COMMAND "SOIL MECHANICS", DESIGN MANUAL 7.1 (5/82) AND "FOUNDATIONS AND EARTH STRUCTURES", DESIGN MANUAL 7.2 (9/86) MAY BE USED AS REFERENCE.
5. BRACED EXCAVATION SHALL CONSIST OF DRILLED SOLDIER PILES AND LAGGING UNLESS OTHERWISE APPROVED BY THE ENGINEER.
6. LOCATE BRACING TO CLEAR COMPLETED WORK AND ARRANGE SO THAT STRESS IS NOT APPLIED TO ANY PORTION OF THE COMPLETED WORK UNTIL SUCH WORK HAS DEVELOPED SUFFICIENT STRENGTH. BRACING SHALL BE ARRANGED TO AVOID PLACING THROUGH THE WORK. NO ADDITIONAL CONSTRUCTION JOINTS WILL BE ADDED TO THE COMPLETED WORK.
7. DETERMINE APPLICABLE SOIL PARAMETERS FROM GEOTECHNICAL REPORT 213497 AS PREPARED BY G2 CONSULTING GROUP, DATED OCTOBER 11, 2021.
8. LATERAL LOADS:
   - 8.1. DETERMINE HYDROSTATIC LOAD BASED ON GROUNDWATER LEVEL OR LOWERED WATER LEVEL IF DEWATERING.
   - 8.2. SURCHARGE:
     - 8.2.1. CONSTRUCTION TRAFFIC..... 3-FEET EARTH
     - 8.2.2. SOUTH CHANNELS..... 19-FEET EARTH
     - 8.2.3. EXISTING SOUTH GARAGE..... 5-FEET EARTH
   - 8.3. DETERMINE ACTIVE LATERAL SOIL PRESSURE FROM THE GEOTECHNICAL REPORT.
9. DETERMINE BASE STABILITY PER NAVFAC DM-7.2, FIGURE 28.
10. MATERIALS:
    - 10.1. BEECH, HICKORY, OR OAK HARDWOOD (1.6 KSI FLEXURAL STRENGTH) FOR WOOD LAGGING.
    - 10.2. REFER TO STRUCTURAL STEEL NOTES FOR STEEL MATERIAL REQUIREMENTS.
11. WOOD LAGGING SHALL BE DESIGNED FOR MAXIMUM ALLOWABLE STRESS OF 2.4 KSI IN FLEXURE (1.6 KSI x 1.5 OVERLOAD = 2.4 KSI).
12. STRUCTURAL STEEL SHALL BE DESIGNED IN ACCORDANCE WITH AISC 360-10, SPECIFICATION FOR STRUCTURAL STEEL BUILDINGS (ASD).
13. MATERIAL OVERSTRESS SHALL BE ALLOWED ONLY WHEN ACTUAL STRESSES ARE CHECKED AT FREQUENT INTERVALS USING STRAIN GAUGES.
14. ELEMENTS SUBJECT TO AXIAL AND FLEXURAL STRESSES SHALL BE DESIGNED FOR THE EFFECTS OF COMBINED STRESSES.
15. UNLESS OTHERWISE NOTED ON THE DRAWINGS. IF THE BRACED EXCAVATION SYSTEM CANNOT BE REMOVED WITHOUT DETRIMENT TO THE FINISHED STRUCTURE OR EXISTING STRUCTURE, THE BRACING SHALL BE LEFT IN PLACE AT NO ADDITIONAL COST TO THE OWNER. PERMANENT BRACING ELEMENTS SHALL BE CUT OFF AT THE LEVEL REQUIRED TO AVOID INTERFERENCE WITH SUBSEQUENT CONSTRUCTION.
16. BRACED EXCAVATION SHALL BE EQUIPPED WITH ADEQUATE FALL PROTECTION IN ACCORDANCE WITH MIOSHA STANDARDS.
17. DRIVING OF VERTICAL STEEL SHEET PILING SHALL NOT BE PERMITTED.
18. REFER TO DRAWINGS RS-1, RS-2 AND RS-3 FOR HISTORIC RECORD DRAWINGS. HISTORICAL ELEVATIONS ON THESE DRAWINGS ARE BASED ON NGVD OF 1929. THE PROPOSED ELEVATIONS AND WORK ITEMS HAVE BEEN CONVERTED TO NAVD 88 DATUM. THE FOLLOWING CONVERSION EQUATION MAY BE USED: NAVD 1988 ELEV = NGVD1929 ELEV. -0.50 FEET.
19. EXISTING FILL SOILS, EXISTING BURIED ABANDONED FOUNDATIONS, AND OBSTRUCTIONS SHALL BE REMOVED FULL DEPTH TO NATIVE SOILS & TO A MIN. OF 3' OUTSIDE OF THE PROPOSED STRUCTURE FOR THE FULL PERIMETER. REPLACE WITH ENGINEERED FILL COMPACTED TO 95% OF THE MODIFIED PROCTOR. SEE SECTION 02200 FOR ADDITIONAL REQUIREMENTS.
20. EXISTING AND PROPOSED UTILITIES ARE NOT DEPICTED ON THIS DRAWING. REFER TO THE CIVIL DRAWINGS FOR EXISTING AND PROPOSED UTILITY LOCATIONS.
21. DETERMINE FROM NAVFAC DM-7.1; FIGURE 2 (p. 7.1 - 268); "PENETRATION OF CUT OFF WALL REQUIRED TO PREVENT PIPING IN ISOTROPIC SAND." SAFETY FACTOR = 2.

NOTICE:
PART OF THIS DRAWING HAS BEEN COPIED FROM A PREVIOUS CONSTRUCTION PROJECT. NO GUARANTEE IS MADE, OR SHOULD BE ASSUMED AS TO THE COMPLETENESS OR ACCURACY OF THE INFORMATION SHOWN ON THIS DRAWING PERTAINING TO OR IN RELATION OF THE EXISTING STRUCTURE. PARTIES UTILIZING THIS INFORMATION SHALL FIELD VERIFY THE ACCURACY AND COMPLETENESS PRIOR TO CONSTRUCTION/DEMOLITION ACTIVITIES.

3/16"=1'-0" 0 1' 2' 4' 8'

FOR TRUE SCALE PLOT THIS SHEET TO 34" x 22" PAPER SIZE

811 Know what's below. Call before you dig.

REV.	DESCRIPTION	DATE	DRAWN	CHECKED
	50% DESIGN SUBMITTAL	10-01-2021	PMH	SDH
	70% DESIGN SUBMITTAL	10-29-2021		
	90% DESIGN SUBMITTAL	11-22-2021		
	ISSUED FOR BIDS SET	12-13-2021		

CITY OF ANN ARBOR
PUBLIC SERVICES
301 EAST HURON STREET
P.O. BOX 8647
ANN ARBOR, MI 48107-8647
734.794.6410
www.a2gov.org

PROJECT MANAGEMENT - PUBLIC SERVICES - CITY OF ANN ARBOR

HEADWORKS IMPROVEMENTS PROJECT
ODOR CONTROL BUILDING BRACED EXCAVATION PLAN

SCALE AS NOTED

DRAWING No. 330

SHEET No. S-8

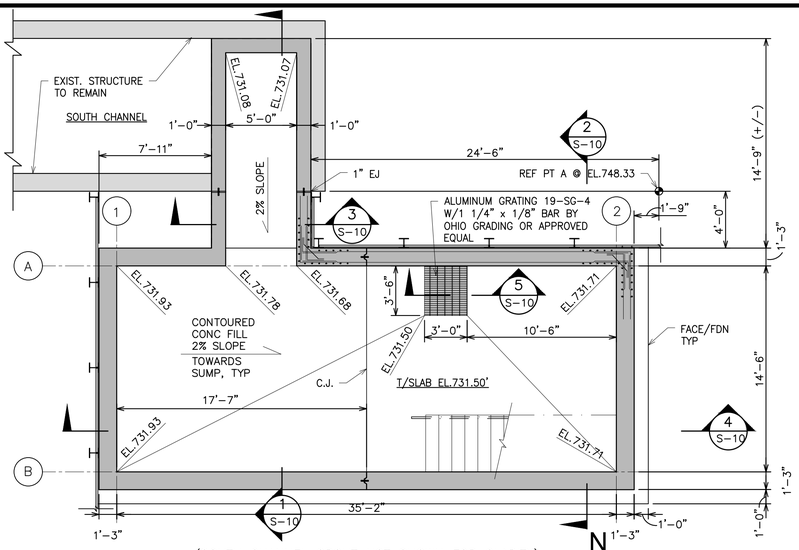

(SOUTH CHANNEL GROUT NOT SHOWN FOR CLARITY)

PARTIAL PLAN AT EL. 731.50

SCALE: 3/16" = 1'-0"

NOTE:
SEE MECH SHTS FOR EQUIPMENT PAD LAYOUT

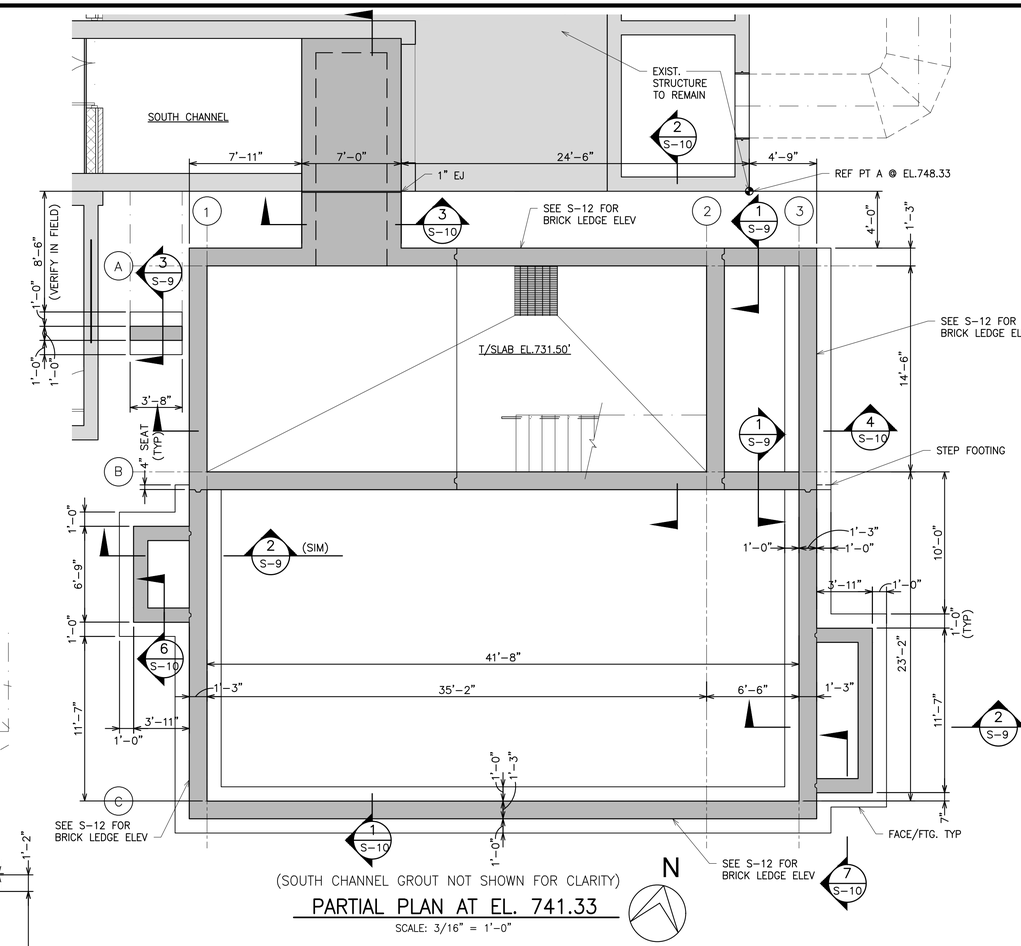

(SOUTH CHANNEL GROUT NOT SHOWN FOR CLARITY)

PARTIAL PLAN AT EL. 741.33

SCALE: 3/16" = 1'-0"

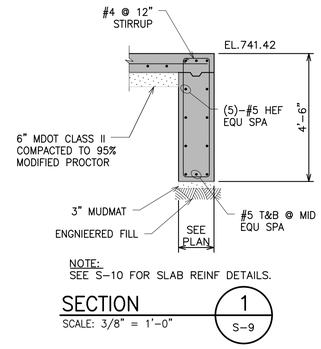

NOTE:
SEE S-10 FOR SLAB REINF DETAILS.

SECTION

SCALE: 3/8" = 1'-0"

1 / S-9

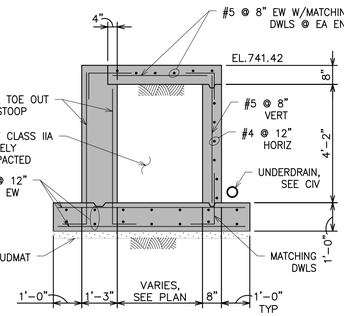

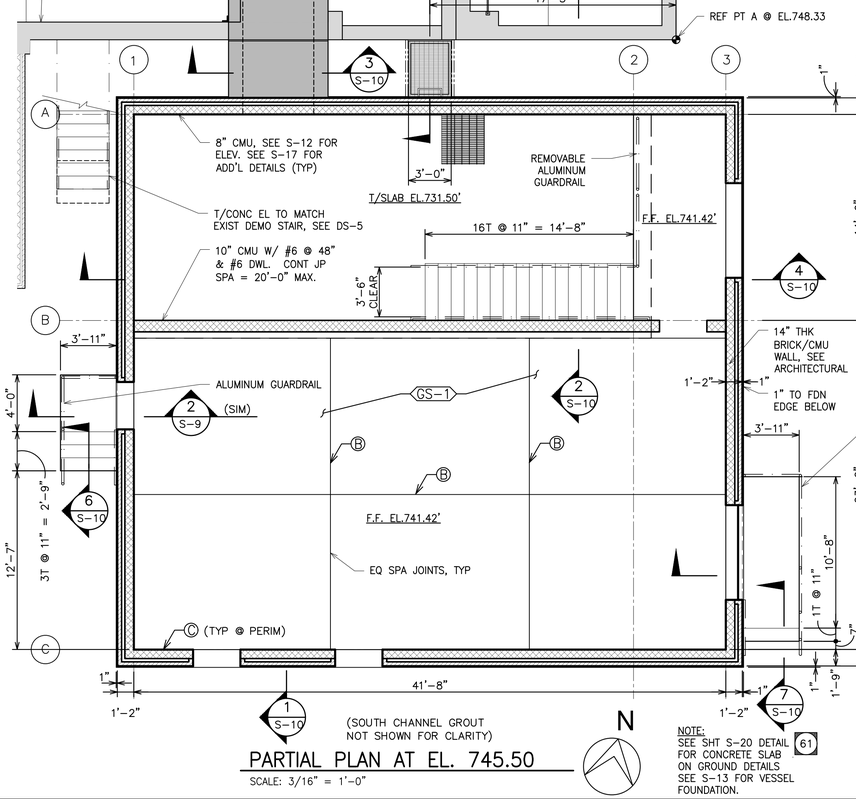

(SOUTH CHANNEL GROUT NOT SHOWN FOR CLARITY)

PARTIAL PLAN AT EL. 745.50

SCALE: 3/16" = 1'-0"

NOTE:
SEE SHT S-20 DETAIL FOR CONCRETE SLAB ON GROUND DETAILS
SEE S-13 FOR VESSEL FOUNDATION.

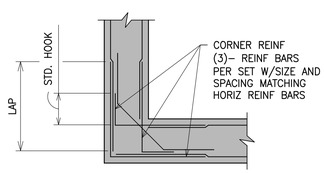

FOR LAP AND HOOK LENGTHS, SEE SHT S-19

(TYPICAL)

CORNER DETAIL

N.T.S.

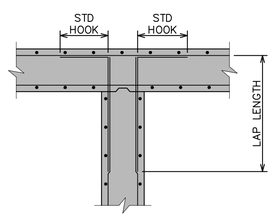

NOTE:
INTERSECTION REINF. SIZE AND SPACING TO MATCH HORIZ. REINF. BARS

TYPICAL WALL INTERSECTION

N.T.S.

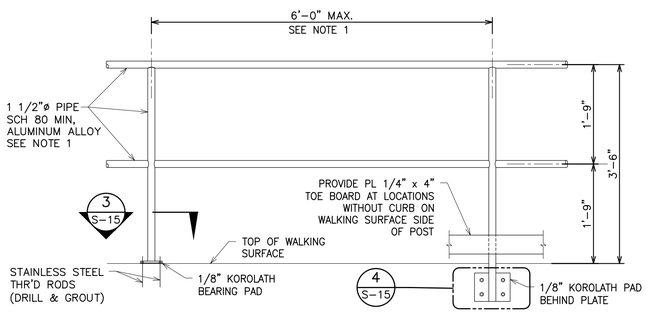

ALUMINUM GUARDRAIL DETAIL

SCALE: 3/4" = 1'-0"

NOTES:

1. ALUMINUM GUARDRAIL SYSTEM SHALL BE DESIGNED IN STRICT ACCORDANCE WITH SPECIFICATION SECTION 05525 AND REQUIREMENTS DESCRIBED ABOVE BY THE CONTRACTOR'S LICENSED PROFESSIONAL ENGINEER CURRENTLY REGISTERED IN THE STATE OF MI. CONTRACTOR TO SUBMIT COMPLETE ENGINEERING DESIGN CALCULATIONS AND SHOP DRAWINGS FOR THE ALUMINUM GUARDRAIL AND ANCHORAGES FOR THE ENGINEER'S REVIEW PRIOR TO FABRICATION. ALL CALCULATIONS AND DRAWINGS SHALL BE SIGNED AND SEALED BY THE CONTRACTOR'S LICENSED PROFESSIONAL ENGINEER.
2. FOR SELF-CLOSING ACCESS GATE, SEE SPECIFICATION SECTION 05500.
3. PROVIDE TOP AND MID RAIL EXTENSION TO MEET EXISTING. TYP BOTH ENDS OF PLATFORM GUARDRAIL.
4. GUARDRAIL SHALL BE REMOVABLE AS INDICATED ON THE DRAWINGS. EACH REMOVABLE GUARDRAIL SEGMENT SHALL WEIGH LESS THAN 50 LBS.

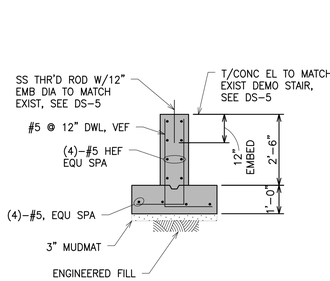

SECTION

SCALE: 3/8" = 1'-0"

2 / S-9

SECTION

SCALE: 3/8" = 1'-0"

3 / S-9

SCALE: 3/8" = 1'-0" (0 1 2 4 6)

3/16"=1'-0" (0 1' 2' 4' 8')

FOR TRUE SCALE PLOT THIS SHEET TO 34" x 22" PAPER SIZE

811 Know what's below. Call before you dig.

REV.	DESCRIPTION	DATE	DRAWN	CHECKED
	50% DESIGN SUBMITTAL	10-01-2021	PMH	SDH
	70% DESIGN SUBMITTAL	10-29-2021	PMH	SDH
	90% DESIGN SUBMITTAL	11-22-2021	PMH/KRK	SDH
	ISSUED FOR BIDS SET	12-13-2021		

CITY OF ANN ARBOR
PUBLIC SERVICES
301 E. HURON STREET
P.O. BOX 8647
ANN ARBOR, MI 48107-8647
(734) 794-6410
www.a2gov.org

PROJECT MANAGEMENT - PUBLIC SERVICES - CITY OF ANN ARBOR

HEADWORKS IMPROVEMENTS PROJECT

ODOR CONTROL BUILDING PLANS

SCALE: AS NOTED

DRAWING No. 331

SHEET No. S-9

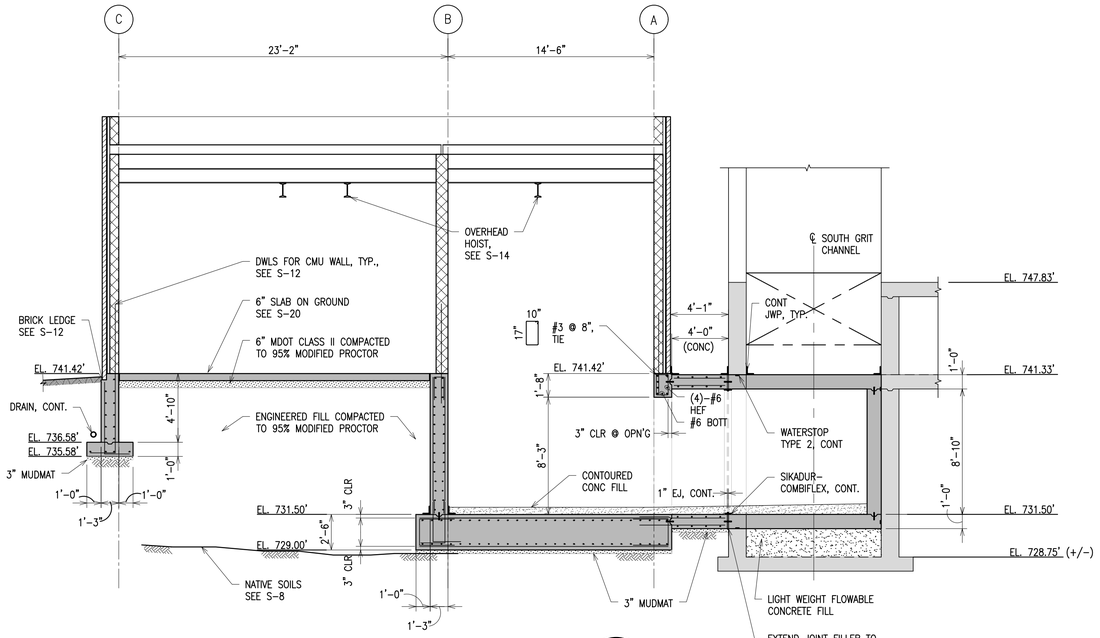

SECTION 1 — SCALE: 3/16" = 1'-0" — S-9

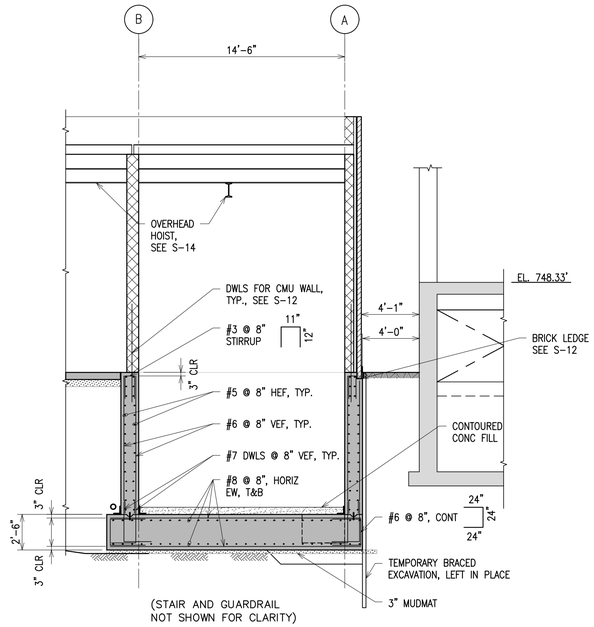

SECTION 2 — SCALE: 3/16" = 1'-0" — S-9

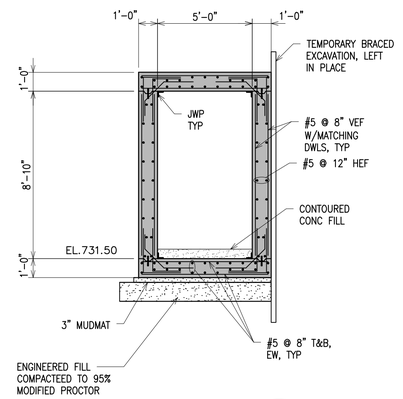

SECTION 3 — SCALE: 1/4" = 1'-0" — S-9

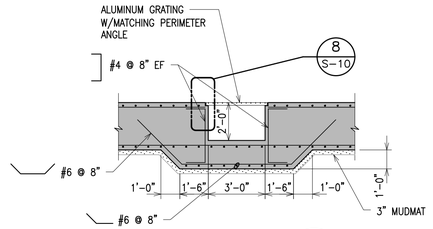

SECTION 5 — SCALE: 1/4" = 1'-0" — S-9

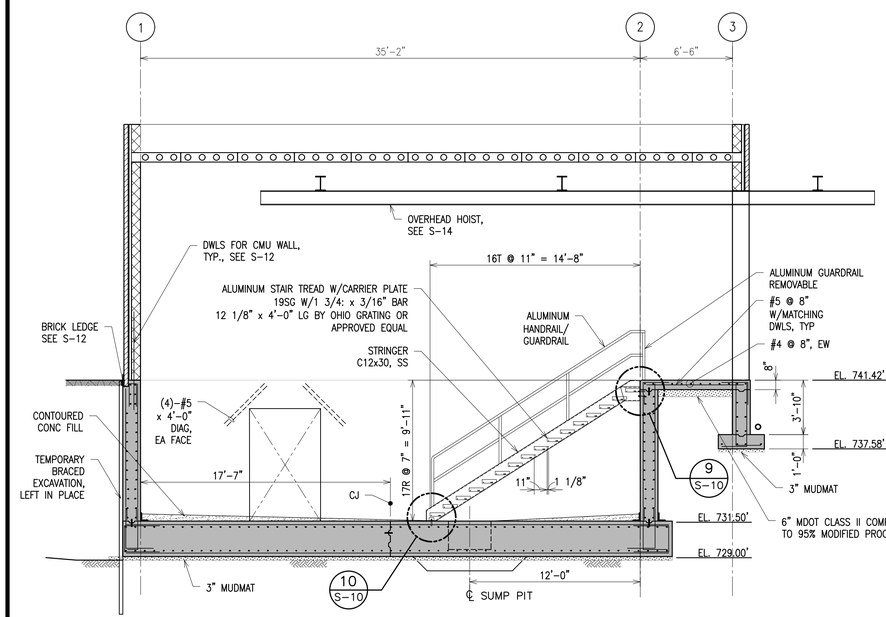

SECTION 4 — SCALE: 3/16" = 1'-0" — S-9

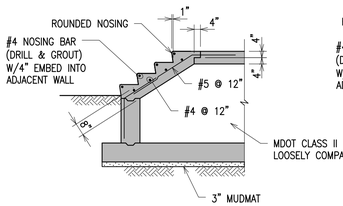

SECTION 6 — SCALE: 1/4" = 1'-0" — S-9

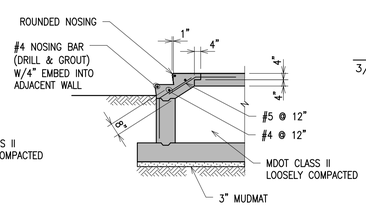

SECTION 7 — SCALE: 1/4" = 1'-0" — S-9

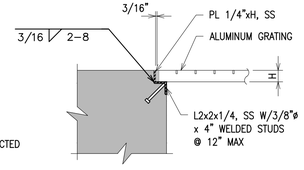

EMBEDDED ANGLE

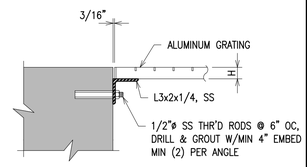

BOLT-UP ANGLE

NOTE:
1. SUPPORT ANGLE SHALL BE CONTINUOUS AROUND FULL PERIMETER OF THE GRATING OR PANEL.
2. FOR ALUMINUM GRATING, SEE SPECIFICATION 05531.
3. FOR DEPT OF GRATING, SEE S-9.

DETAIL 8 — NTS — S-10

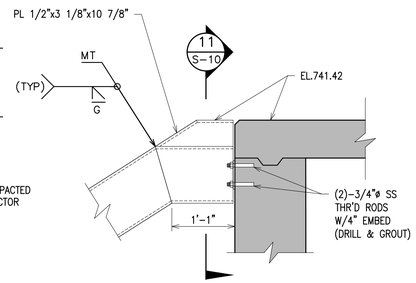

NOTE: TREADS AND RAILING NOT SHOWN FOR CLARITY.

DETAIL 9 — SCALE: 3/4" = 1'-0" — S-10

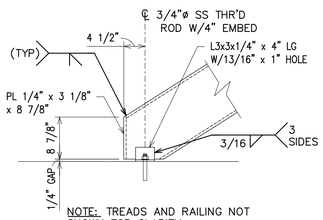

NOTE: TREADS AND RAILING NOT SHOWN FOR CLARITY.

DETAIL 10 — SCALE: 3/4" = 1'-0" — S-10

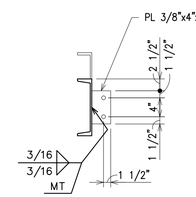

SECTION 11 — SCALE: 3/4" = 1'-0" — S-10

NOTE:
PART OF THIS DRAWING HAS BEEN COPIED FROM A PREVIOUS CONSTRUCTION PROJECT. NO GUARANTEE IS MADE, OR SHOULD BE ASSUMED AS TO THE COMPLETENESS OR ACCURACY OF THE INFORMATION SHOWN ON THIS DRAWING PERTAINING TO OR IN RELATION OF THE EXISTING STRUCTURE. PARTIES UTILIZING THIS INFORMATION SHALL FIELD VERIFY THE ACCURACY AND COMPLETENESS PRIOR TO CONSTRUCTION/DEMOLITION ACTIVITIES.

SCALE: 1/4" = 1'-0" (0 1' 2' 4' 8')

3/16"=1'-0" (0 1' 2' 4' 8')

FOR TRUE SCALE PLOT THIS SHEET TO 34" x 22" PAPER SIZE

811 Know what's below. Call before you dig.

REV.	DESCRIPTION	DATE	DRAWN	CHECKED
	50% DESIGN SUBMITTAL	10-01-2021	PMH	SDH
	70% DESIGN SUBMITTAL	10-29-2021	PMH	SDH
	90% DESIGN SUBMITTAL	11-22-2021	PMH	SDH
	ISSUED FOR BIDS SET	12-13-2021	PMH/KRK	SDH

CITY OF ANN ARBOR
PUBLIC SERVICES
301 EAST HURON STREET
P.O. BOX 8647
ANN ARBOR, MI 48107-8647
734.794.6410
www.a2gov.org

PROJECT MANAGEMENT - PUBLIC SERVICES - CITY OF ANN ARBOR

HEADWORKS IMPROVEMENTS PROJECT

ODOR CONTROL BUILDING SECTIONS

SCALE: AS NOTED

DRAWING No. 332

SHEET No. S-10

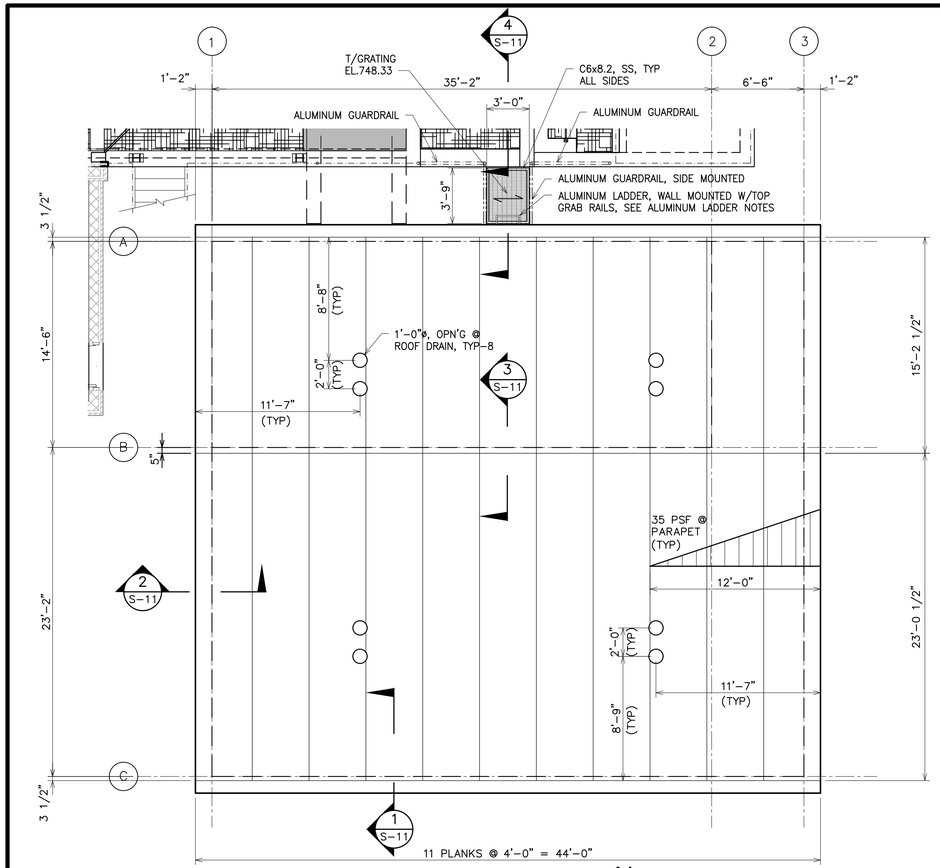

ROOF PLAN

SCALE: 3/16" = 1'-0"

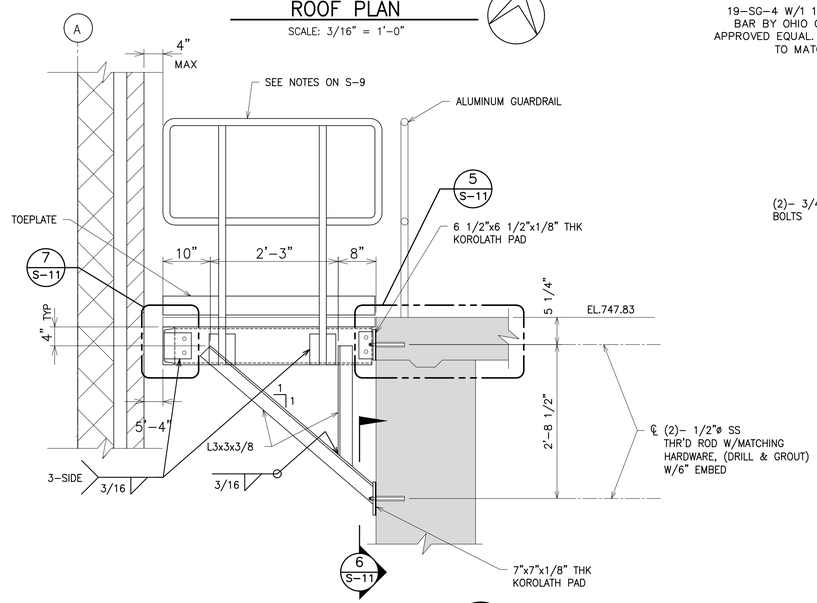

SECTION 4

SCALE: 3/4" = 1'-0"

S-9

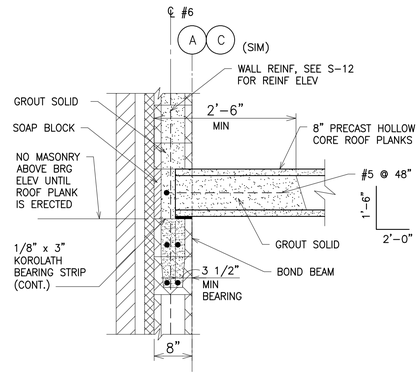

SECTION 1

SCALE: 3/4" = 1'-0"

S-11

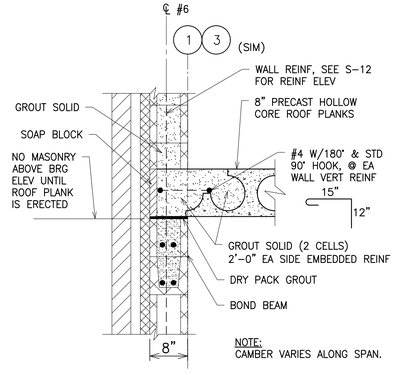

SECTION 2

SCALE: 3/4" = 1'-0"

S-11

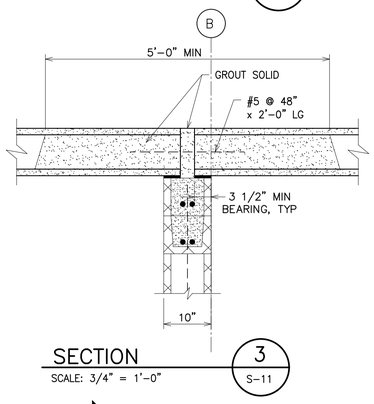

SECTION 3

SCALE: 3/4" = 1'-0"

S-11

ALUMINUM LADDER NOTES:

1. ALUMINUM LADDER SYSTEM SHALL MEET MIOSHA REQUIREMENTS FOR FIXED LADDER.
2. THE ALUMINUM LADDER ANCHORAGE SHALL BE DESIGNED BY THE CONTRACTOR'S ENGINEER AND MEET REQUIREMENTS OF SECTION 05051.

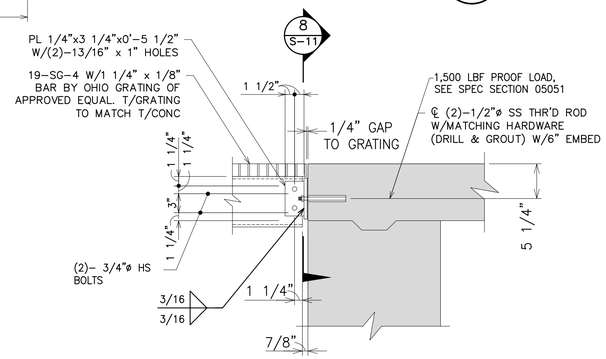

DETAIL 5

SCALE: 1" = 1'-0"

S-11

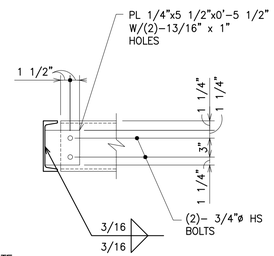

NOTE:
SIDE MOUNTED GUARDRAIL NOT SHOWN FOR CLARITY.

DETAIL 7

SCALE: 1" = 1'-0"

S-11

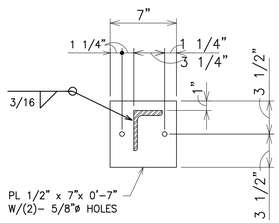

SECTION 6

SCALE: 1 1/2" = 1'-0"

S-11

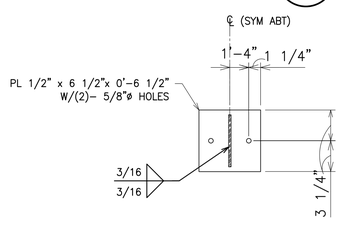

SECTION 8

SCALE: 1 1/2" = 1'-0"

S-11

ROOF TOP EQUIPMENT LEGEND

MK
WT#

MK – EQUIPMENT MARK
WT – EQUIPMENT WEIGHT (LBS.)
COORDINATE EQUIPMENT SIZE, WEIGHT, LOCATION AND OPENING SIZE AND LOCATION WITH THE MANUF. AND MECHANICAL CONTRACTOR. TOLERANCE FOR EQUIPMENT LOCATION IS ±1'-0" FROM WHERE AS SHOWN ON THIS SHEET.

SNOW DRIFT LEGEND

Pd
W

Pd = DRIFT SURCHARGE LOAD
W = DRIFT WIDTH

ROOF DIAPHRAGM LOADS

WIND:	
N-S:	350 PLF
E-W:	350 PLF
SEISMIC:	
N-S:	500 PLF
E-W:	550 PLF

STRUCTURAL DESIGN CRITERIA

1. GOVERNING DESIGN CODE: MICHIGAN BUILDING CODE, 2015 EDITION, 1st PRINTING.
2. ALL DESIGN, MATERIAL AND WORKMANSHIP SHALL CONFORM TO THE MINIMUM REQUIREMENTS FOUND IN THE GOVERNING CODES AND ASSOCIATED REFERENCED STANDARDS.
3. ALL LOADS PROVIDED ARE NOMINAL LEVEL (UNFACTORED) LOADS AS DEFINED IN THE GOVERNING CODE.
4. DEAD LOAD CRITERIA:
   ROOF:
   PLANK ..... 75 PSF
   INSULATION & ROOFING: ..... 4 PSF
   MECHANICAL, ELECTRICAL & PLUMBING: ..... 8 PSF
5. LIVE LOAD CRITERIA:
   ROOF:
   UNIFORM: ..... 20 PSF
   CONCENTRATED: ..... 300 LBS ON 4"x4" AREA
   CONVEYOR HANGER ..... 1,000 LBS
   FLOOR @ ALL OTHER ROOMS (ALL ELEVATIONS):
   UNIFORM: ..... 150 PSF
   CONCENTRATED: ..... 2,000 LBS ON 12"x12" AREA
6. SNOW LOAD CRITERIA:
   (SEE ASCE 7-10 FIGURE 7-5 & 7-8 FOR DETAILS):
   GROUND SNOW LOAD, P_g: ..... 25 PSF
   FLAT ROOF SNOW LOAD, BUILDING P_f: ..... 20 PSF
   SLOPED ROOF SNOW LOAD P_s: ..... 20 PSF
   SNOW LOAD EXPOSURE FACTOR, C_e: 1.0
   SNOW LOAD IMPORTANCE FACTOR I_s: 1.1
   THERMAL FACTOR, C_t: 1.0
7. WIND LOAD CRITERIA:
   ULTIMATE WIND SPEED, V_{ULT}: ..... 120 MPH
   ALLOWABLE WIND SPEED, V_{ASD}: ..... 93 MPH
   RISK CATEGORY: III
   WIND IMPORTANCE FACTOR, I_w: 1.0
   WIND EXPOSURE CATEGORY: ..... B
   INTERNAL PRESSURE COEFFICIENT, GC_{pi}: ..... ± 0.18
8. MINIMUM COMPONENT AND CLADDING LOADS
   (SEE ASCE 7-10 FIGURE 30.5-1 FOR DETAILS):
   ROOF INTERIOR ZONE 1: ..... +10/-23 PSF
   ROOF END ZONE 2: ..... +17/-25 PSF
   ROOF CORNER ZONE 3: ..... +22/-36 PSF
   WALL INTERIOR ZONE 4: ..... +16/-18 PSF
   WALL END ZONE 5: ..... +19/-23 PSF
   PARAPET: ..... +89/-63 PSF
   (+/- INDICATES PRESSURE ACTING TOWARD/AWAY FROM PROJECTED SURFACE, RESPECTIVELY)
9. SEISMIC LOAD CRITERIA:
   RISK CATEGORY: III
   SEISMIC IMPORTANCE FACTOR, I_E: 1.25
   MAPPED SPECTRAL RESPONSE ACCELERATION, S_S: .. 9.5%g
   MAPPED SPECTRAL RESPONSE ACCELERATION, S_1: .. 4.8%g
   DESIGN SPECTRAL RESPONSE ACCELERATION, S_{DS}: .. 0.101g
   DESIGN SPECTRAL RESPONSE ACCELERATION, S_{D1}: .. 0.076g
   SITE CLASS: ..... D
   SEISMIC DESIGN CATEGORY: ..... B
   BASIC SEISMIC FORCE – RESISTING SYSTEM: ..... ORDINARY REINFORCED MASONRY SHEAR WALLS
   SEISMIC RESPONSE COEFFICIENT, C_S: 0.06
   RESPONSE MODIFICATION FACTOR, R: 2.0
   ANALYSIS PROCEDURE: ..... ELF
   DESIGN BASE SHEAR: ..... 28,000 LBS

SCALE: 3/4" = 1'-0" (0, 0.5, 1', 2', 3')

3/16"=1'-0" (0, 1', 2', 4', 8')

FOR TRUE SCALE PLOT THIS SHEET TO 34" x 22" PAPER SIZE

811 Know what's below. Call before you dig.

REV.	DESCRIPTION	DATE	DRAWN	CHECKED
	50% DESIGN SUBMITTAL	10-01-2021	PMH	SDH
	70% DESIGN SUBMITTAL	10-29-2021	PMH	SDH
	90% DESIGN SUBMITTAL	11-22-2021	PMH	SDH
	ISSUED FOR BIDS SET	12-13-2021	PMH/KRK	SDH

CITY OF ANN ARBOR
PUBLIC SERVICES
301 E. HURON STREET
P.O. BOX 8647
ANN ARBOR, MI 48107-8647
(734) 794-6410
www.a2gov.org

CITY OF ANN ARBOR MICHIGAN

PROJECT MANAGEMENT - PUBLIC SERVICES - CITY OF ANN ARBOR

HEADWORKS IMPROVEMENTS PROJECT

ODOR CONTROL BUILDING ROOF PLAN, SECTIONS AND DETAILS

SCALE: AS NOTED

DRAWING No.: 333

SHEET No.: S-11

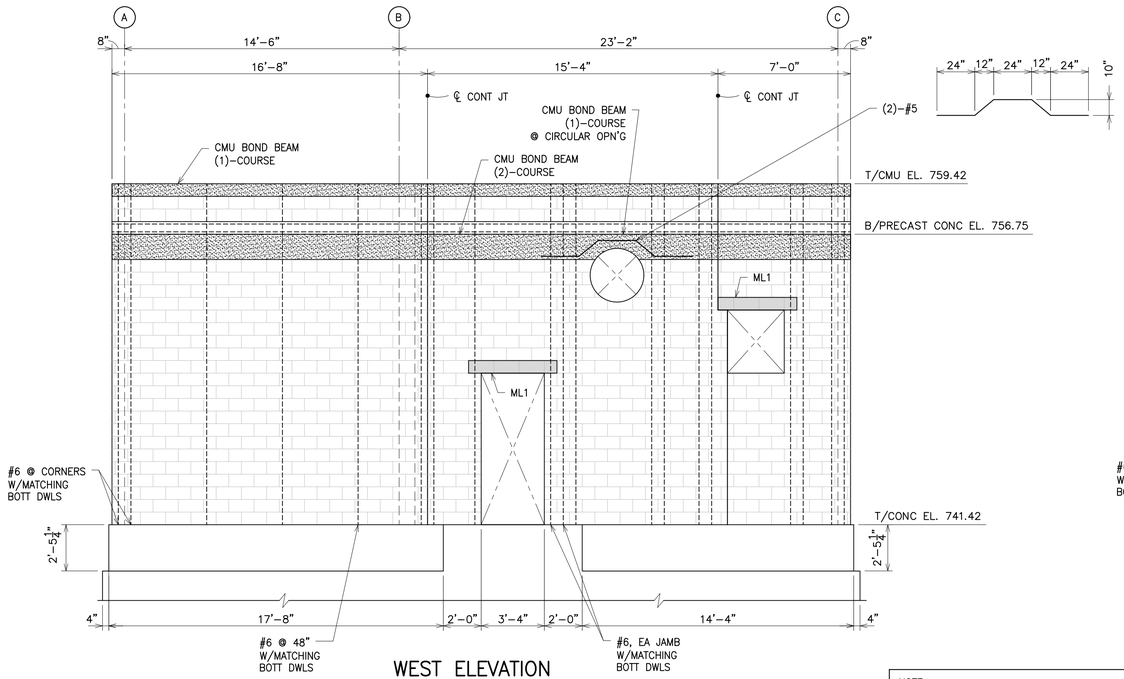

WEST ELEVATION

SCALE: 1/4" = 1'–0"

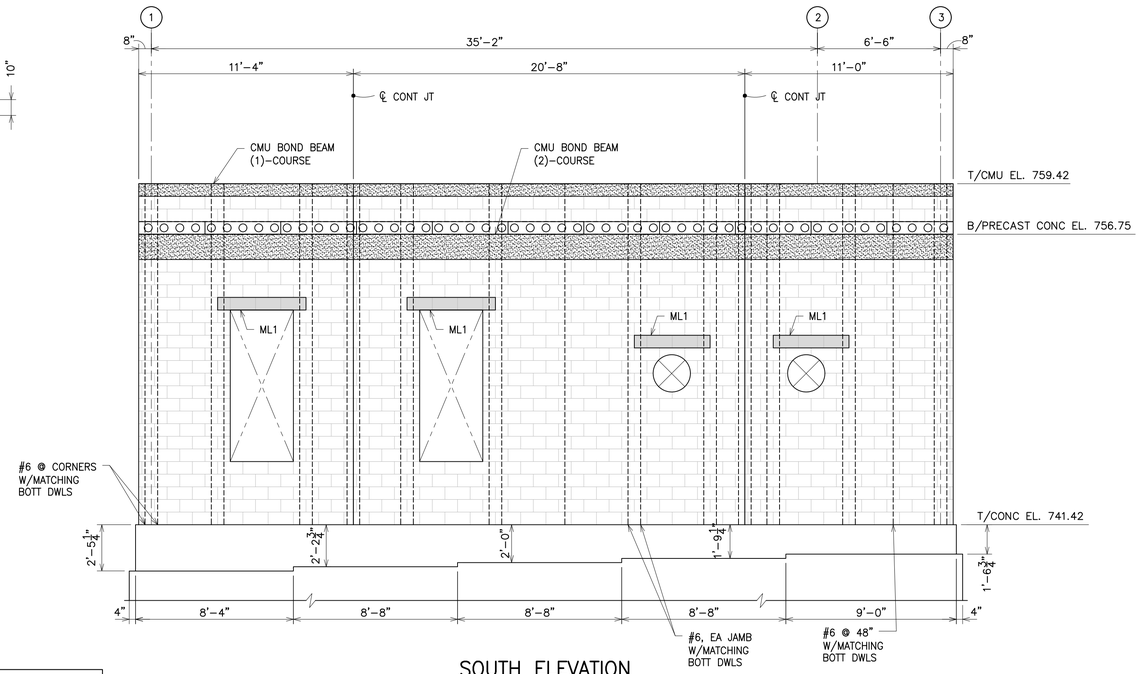

SOUTH ELEVATION

SCALE: 1/4" = 1'–0"

NOTE:
BLOCK PATTERN AND OPENINGS SHOWN ARE NOT ACTUAL LAYOUT. REFER TO ARCH SHEETS FOR BLOCK LAYOUT AND OPENING LOCATIONS.

REFER TO PROCESS AND MECHANICAL SHEETS FOR CIRCULAR CLOSURE DETAILS AROUND CIRCULAR PIPES AND DUCTS.

FOR ADDITIONAL DETAILS, SEE SHT S–16 & S–17.

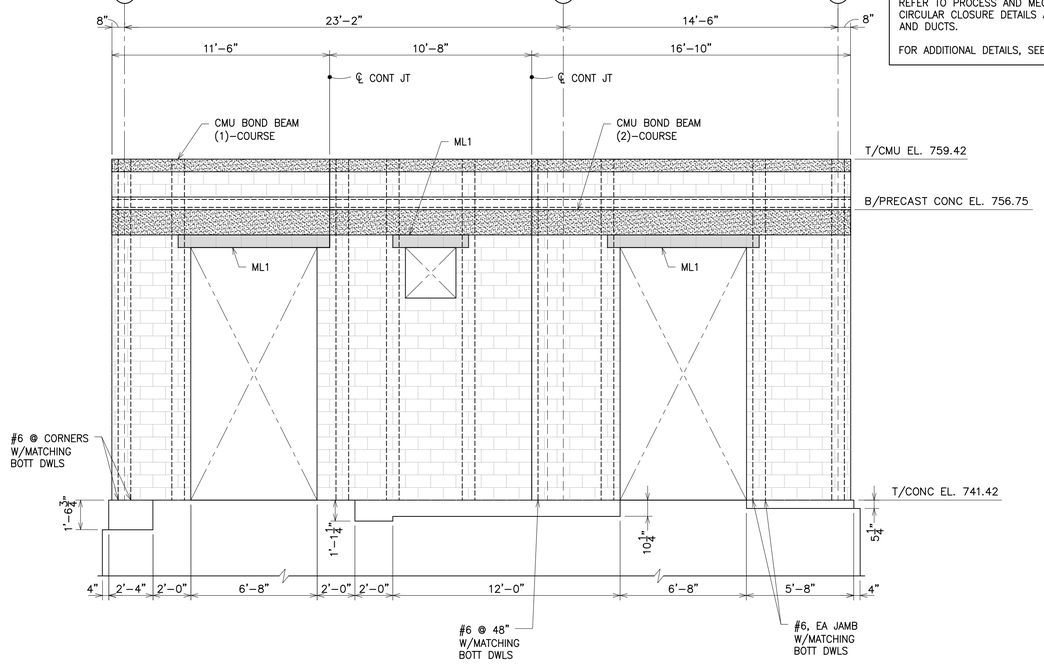

EAST ELEVATION

SCALE: 1/4" = 1'–0"

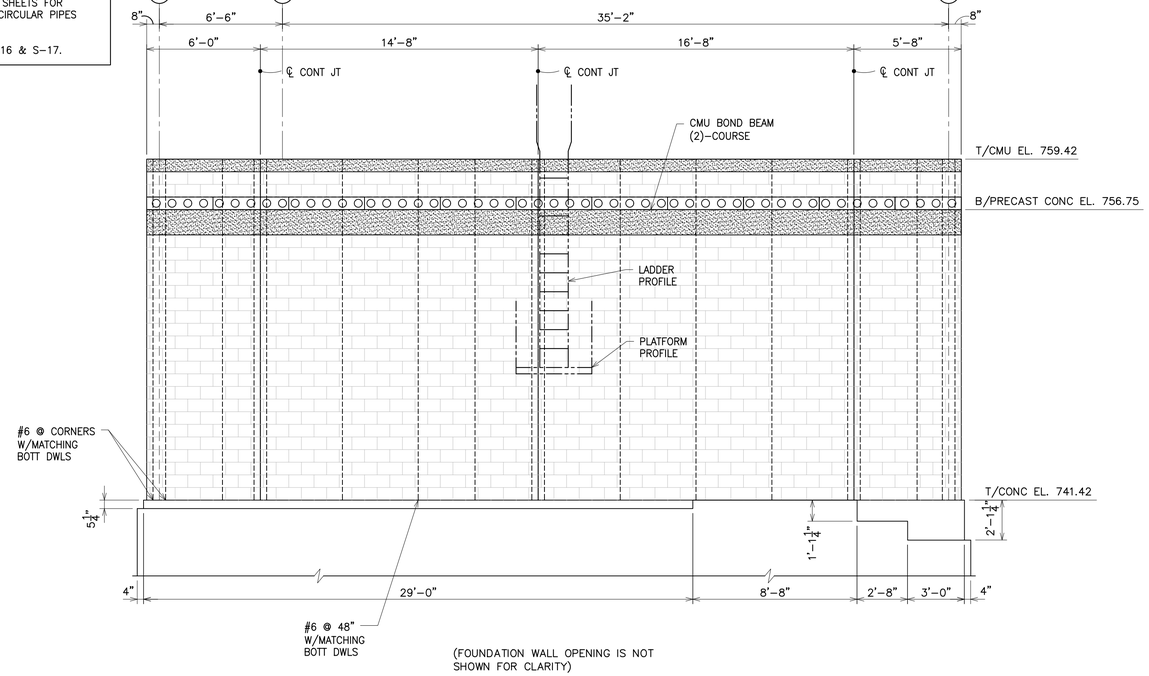

(FOUNDATION WALL OPENING IS NOT SHOWN FOR CLARITY)

NORTH ELEVATION

SCALE: 1/4" = 1'–0"

811 Know what's below. Call before you dig.

REV.	DESCRIPTION	DATE	DRAWN	CHECKED
	50% DESIGN SUBMITTAL	10–01–2021	KRK	SDH
	70% DESIGN SUBMITTAL	10–29–2021	PMH	SDH
	90% DESIGN SUBMITTAL	11–22–2021	PMH	SDH
	ISSUED FOR BIDS SET	12–13–2021		

CITY OF ANN ARBOR
PUBLIC SERVICES
301 EAST HURON STREET
P.O. BOX 8647
ANN ARBOR, MI 48107-8647
(734) 794-6410
www.a2gov.org

PROJECT MANAGEMENT - PUBLIC SERVICES - CITY OF ANN ARBOR

HEADWORKS IMPROVEMENTS PROJECT

ODOR CONTROL BUILDING SECTIONS, DETAILS AND ELEVATIONS

SCALE: AS NOTED

DRAWING No. 334

SHEET No. S–12

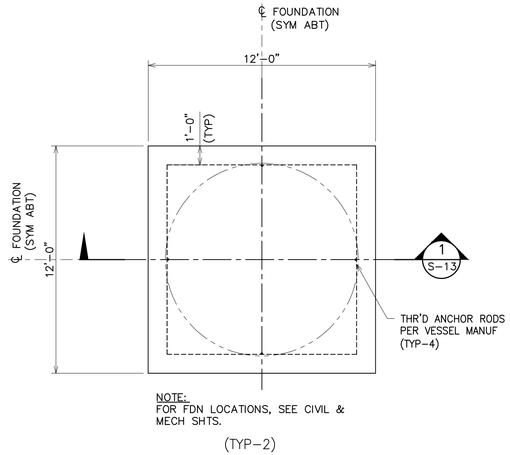

NOTE:
FOR FDN LOCATIONS, SEE CIVIL & MECH SHTS.

(TYP-2)

VESSEL FOUNDATION

TOP PLAN

SCALE: 1/4" = 1'-0"

N

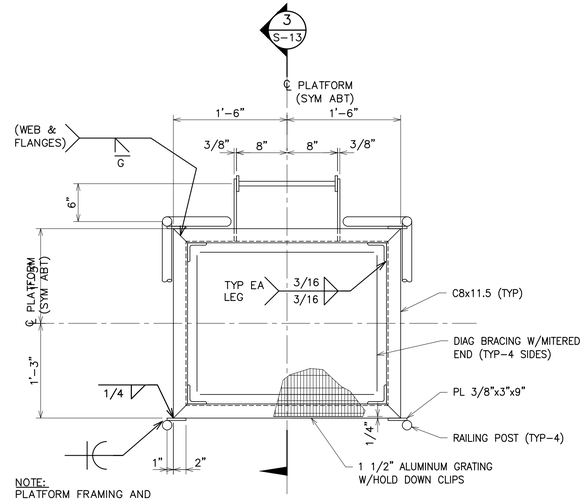

NOTE:
PLATFORM FRAMING AND GUARDRAILS SHALL BE ASTM A36 AND GALV (ASTM A123)

(TYP-2)

GRIT WASHER PLATFORM PLAN

SCALE: 1" = 1'-0"

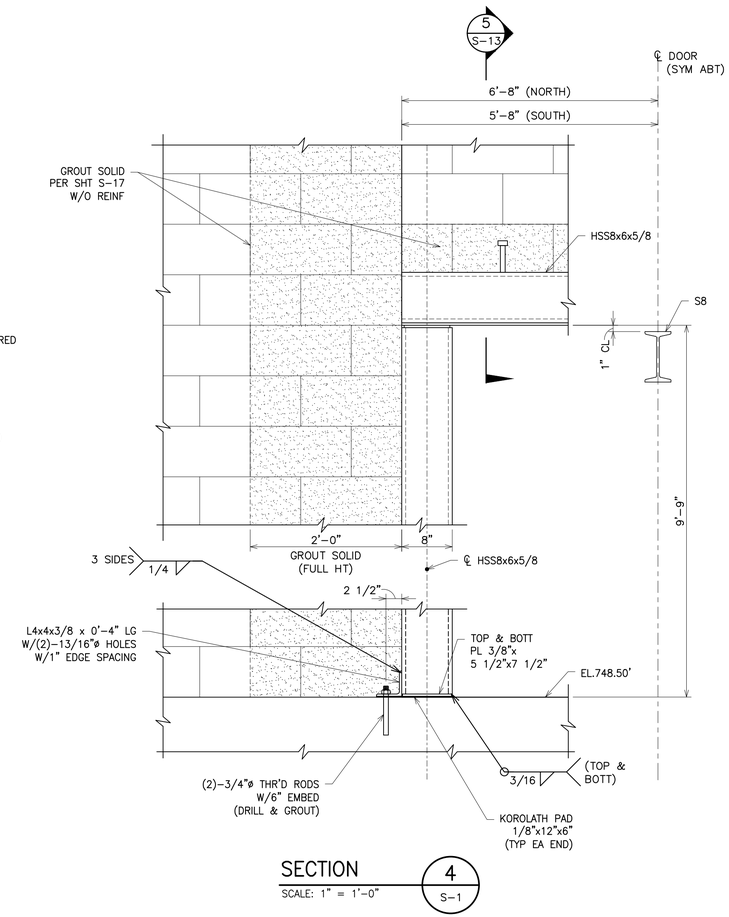

SECTION

SCALE: 1" = 1'-0"

4 S-1

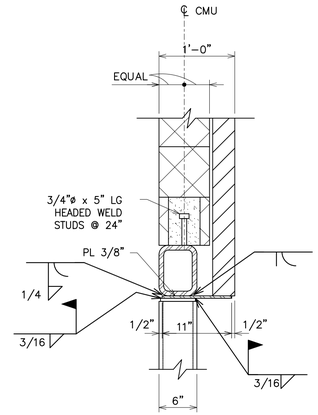

SECTION

SCALE: 1" = 1'-0"

5 S-13

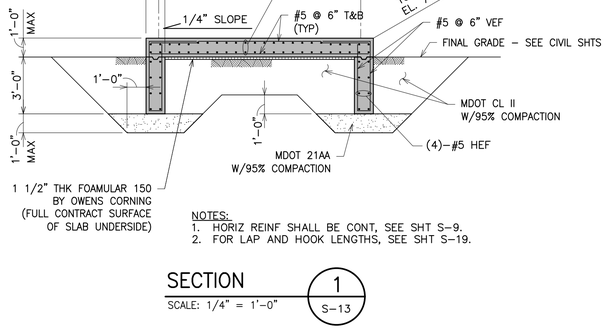

NOTES:
1. HORIZ REINF SHALL BE CONT, SEE SHT S-9.
2. FOR LAP AND HOOK LENGTHS, SEE SHT S-19.

SECTION

SCALE: 1 1/2" = 1'-0"

1 S-13

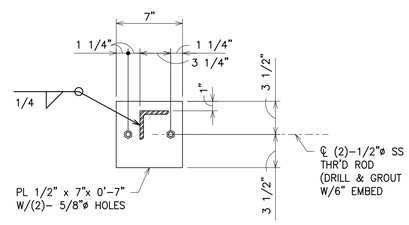

(TYP-4)

SECTION

SCALE: 1 1/2" = 1'-0"

2 S-13

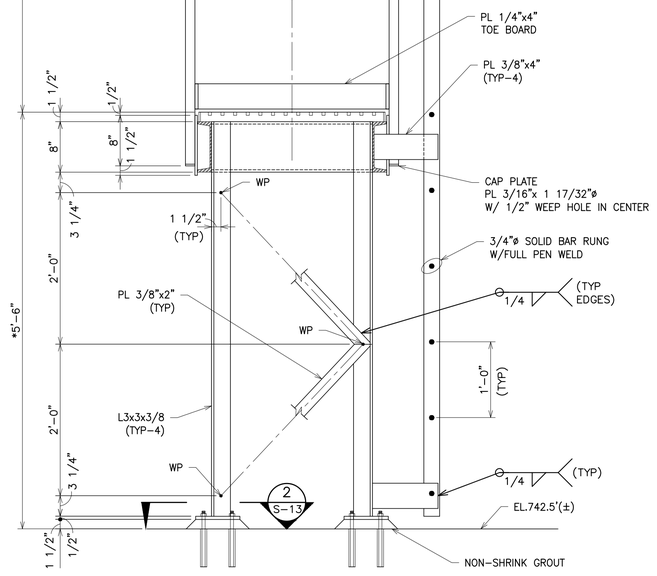

NOTE:
* COORDINATE W/APPROVED SHOP DRAWINGS FOR GRIT WASHER.

SECTION

SCALE: 1" = 1'-0"

3 S-13

811 Know what's below. Call before you dig.

REV.	DESCRIPTION	DATE	DRAWN	CHECKED
	ISSUED FOR BIDS SET	12-13-2021	PMH	SDH
	90% DESIGN SUBMITTAL	11-22-2021		
	70% DESIGN SUBMITTAL	10-29-2021		
	50% DESIGN SUBMITTAL	10-01-2021		

CITY OF ANN ARBOR
PUBLIC SERVICES
301 E HURON STREET
P.O. BOX 8647
ANN ARBOR, MI 48107-8647
734.794-6410
www.a2gov.org

PROJECT MANAGEMENT - PUBLIC SERVICES - CITY OF ANN ARBOR

HEADWORKS IMPROVEMENTS PROJECT

VESSEL FOUNDATION AND PLATFORM PLAN AND SECTIONS

SCALE: AS NOTED

DRAWING No. 336

SHEET No. S-13

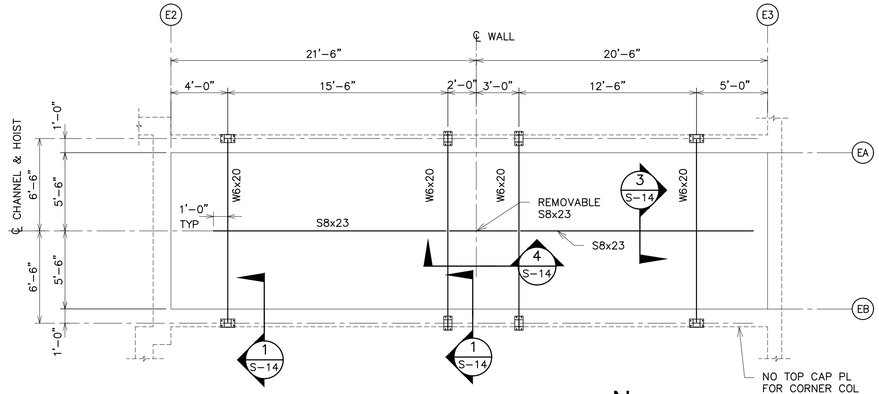

NORTH GRIT CHANNEL PLAN

SCALE: 3/16" = 1'–0"

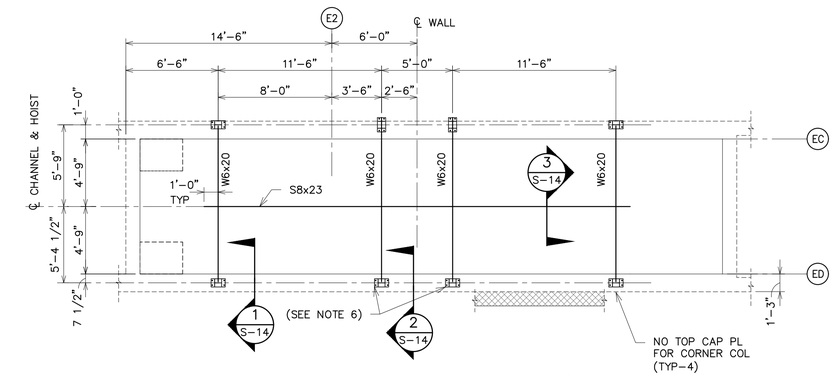

SOUTH GRIT CHANNEL PLAN

SCALE: 3/16" = 1'–0"

NOTES:

1. OVERHEAD HOIST WILL BE LOCATED IN A BUILDING WITH HAZARDOUS ATMOSPHERE. ALL MOTORS SHALL BE NON–SPARKING WITH STAINLESS STEEL HARDWARE AND ALL STEEL STRUCTURES SHALL BE DESIGNED WITH A 1/16" CORROSION ALLOWANCE ON ALL SURFACES.
2. HOIST CAPACITY – 1 TON
3. NUTS AND BOLTS SHALL BE STAINLESS STEEL ASTM A320, GR B8M.
4. OVERHEAD HOIST SHALL BE MODEL U11–200 BY DEMAG HOIST. OVERHEAD SUPPORT FRAME SHALL BE ASTM A992 & A572, GR 50 AND GALV (ASTM A123). ALL ASSOCIATED HARDWARE SHALL BE STAINLESS STEEL.
5. HOIST SHALL BE WIRELESS.
6. ROTATE COLUMN TOP AND BASE PLATE 90° FROM THAT DETAILED. COLUMN ORIENTATION REMAINS AS SHOWN ON PLAN.
7. SPREADER BAR SHALL BE ADJUSTABLE LIFTING BEAM ITEM #44N635 BY GRAINGER

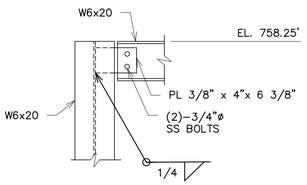

SECTION 1 / S–14

SCALE: 1" = 1'–0"

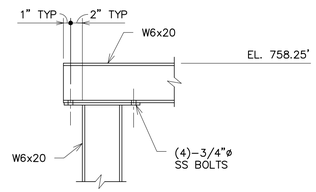

SECTION 2 / S–14

SCALE: 1" = 1'–0"

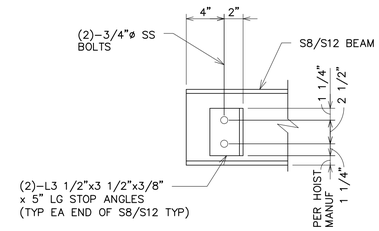

END STOP

SCALE: 1 1/2" = 1'–0"

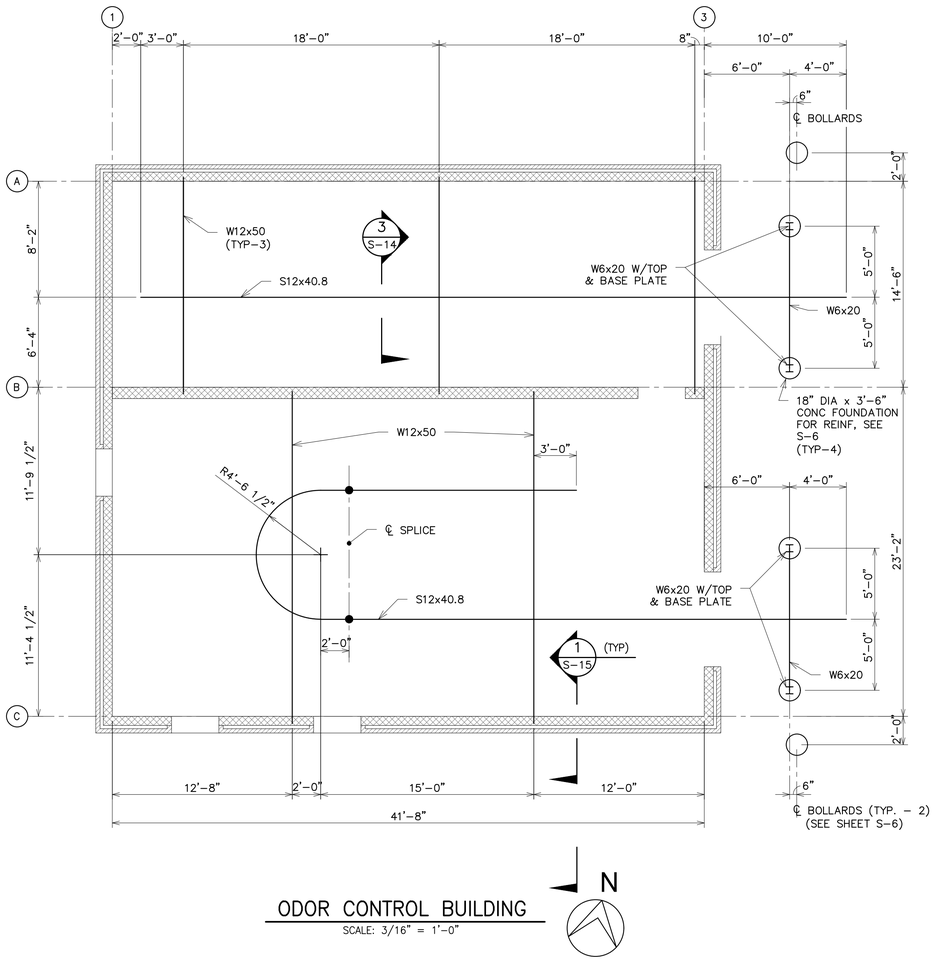

ODOR CONTROL BUILDING

SCALE: 3/16" = 1'–0"

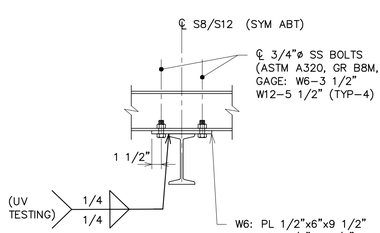

SECTION 3 / S–14

SCALE: 1" = 1'–0"

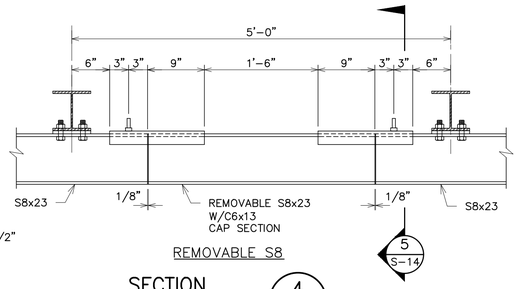

REMOVABLE S8

SECTION 4 / S–14

SCALE: 1" = 1'–0"

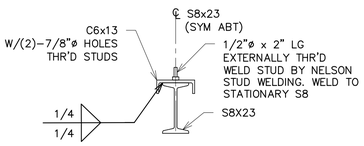

NOTE:
C6x13 CAP IS WELDED TO REMOVABLE S8 SECTION ONLY.

SECTION 5 / S–14

SCALE: 1" = 1'–0"

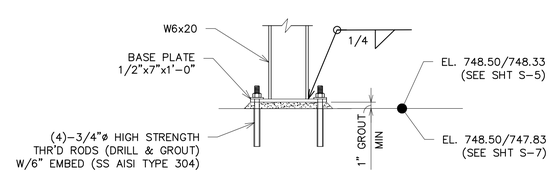

COLUMN BASE PLATE

SCALE: 1" = 1'–0"

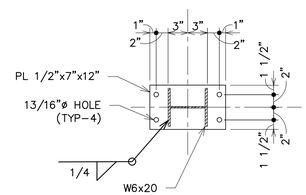

COLUMN TOP & BASE PLATE

SCALE: 1" = 1'–0"

811 Know what's below. Call before you dig.

REV.	DESCRIPTION	DATE	DRAWN	CHECKED
	ISSUED FOR BIDS SET	12–13–2021	PMH	SDH
	90% DESIGN SUBMITTAL	11–22–2021		
	70% DESIGN SUBMITTAL	10–29–2021		
	50% DESIGN SUBMITTAL	10–01–2021		

CITY OF ANN ARBOR
PUBLIC SERVICES
301 EAST HURON STREET
P.O. BOX 8647
ANN ARBOR, MI 48107–8647
(734) 794–6410
www.a2gov.org

PROJECT MANAGEMENT - PUBLIC SERVICES - CITY OF ANN ARBOR

HEADWORKS IMPROVEMENTS PROJECT

OVERHEAD HOIST DETAILS

SCALE: AS NOTED

DRAWING No. 340

SHEET No. S–14

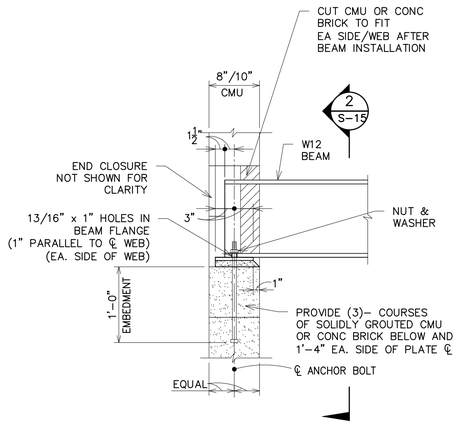

SECTION 1 / S-15
SCALE: 1" = 1'-0"

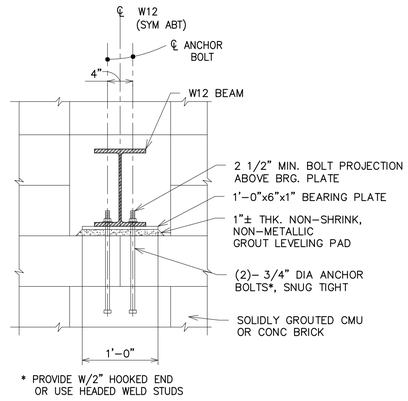

SECTION 2 / S-15
SCALE: 1" = 1'-0"

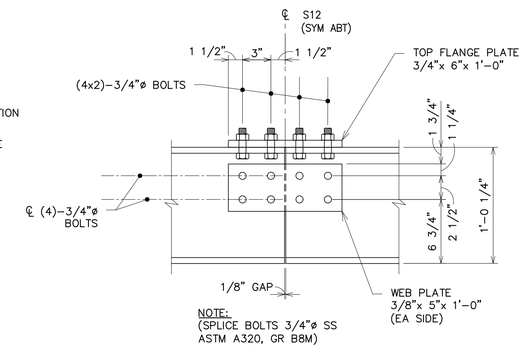

SPLICE DETAIL
SCALE: 1 1/2" = 1'-0"

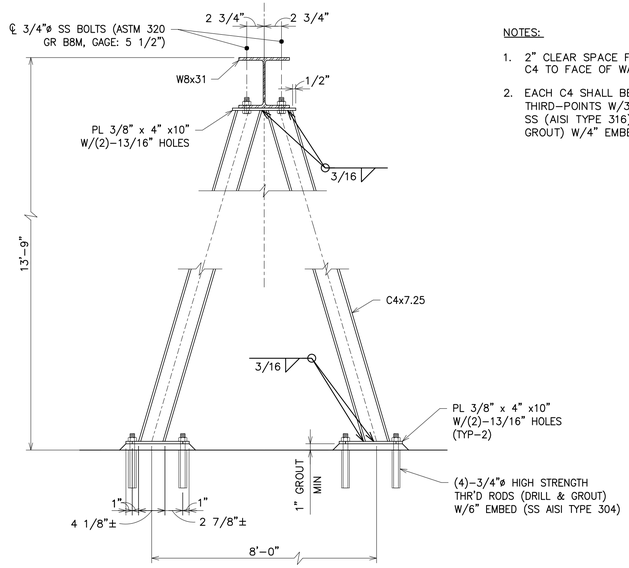

NOTES:

1. 2" CLEAR SPACE FROM BACK OF C4 TO FACE OF WALL
2. EACH C4 SHALL BE BRACED AT THIRD-POINTS W/3/4"ø THR'D ROD SS (AISI TYPE 316) (DRILL & GROUT) W/4" EMBED (4 TOTAL).

SECTION 3 / S-1
SCALE: 1" = 1'-0"



SECTION 4 / S-9
SCALE: 3" = 1'-0"

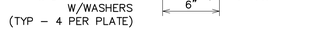

SIDE MOUNTED POST

DETAIL 5 / S-9
SCALE: 1 1/2" = 1'-0"

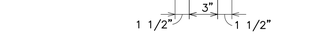

NOTE:
DIRECTION PER LANDING AREA OF EXTERIOR OVERHEAD DOOR.

DETAIL 6 / S-15
SCALE: 1 1/2" = 1'-0"

811 Know what's below. Call before you dig.

REV.	DESCRIPTION	DATE	DRAWN	CHECKED
	ISSUED FOR BIDS SET	12-13-2021	PMH	SDH
	90% DESIGN SUBMITTAL	11-22-2021	PMH	SDH
	70% DESIGN SUBMITTAL	10-29-2021	PMH	SDH
	50% DESIGN SUBMITTAL	10-01-2021	PMH	SDH

CITY OF ANN ARBOR
PUBLIC SERVICES
301 EAST HURON STREET
P.O. BOX 8647
ANN ARBOR, MI 48107-8647
734.794.6410
www.a2gov.org

PROJECT MANAGEMENT - PUBLIC SERVICES - CITY OF ANN ARBOR

HEADWORKS IMPROVEMENTS PROJECT

OVERHEAD HOIST DETAILS

SCALE: AS NOTED

DRAWING No. 341

SHEET No. S-15

ABBREVIATIONS:

ADDT'L – ADDITIONAL
B'G – BEARING
CJP – COMPLETE JOINT PENETRATION
COL – COLUMN
CONST JT – CONSTRUCTION JOINT
CONT – CONTINUOUS
DIP – DUCTILE IRON PIPE
EL – ELEVATION
EQU SPA – EQUALLY SPACED
EXIST –EXISTING
EXP JT – EXPANSION JOINT
FDN – FOUNDATION
FIN FL – FINISHED FLOOR
HORIZ – HORIZONTAL
HP – HIGH POINT
HS – HIGH STRENGTH
HT – HEIGHT
ISO JT – ISOLATION JOINT
LLBB – LONG LEG BACK TO BACK
LLV – LONG LEG VERTICAL
MIN – MINIMUM
MAX – MAXIMUM
NPS – NOMINAL PIPE SIZE
NTS – NOT TO SCALE
OC – ON CENTER
OPN'G – OPENING
OPP HD – OPPOSITE HAND
RCP – REINFORCED CONCRETE PIPE
SPA – SPACE
SHT – SHEET
SIM – SIMILAR
SS – STAINLESS STEEL
SYM ABT – SYMMETRICAL ABOUT
THK – THICKNESS
TOM – TOP OF MASONRY
TOS – TOP OF STEEL
TYP – TYPICAL
UON – UNLESS OTHERWISE NOTED
WP – WORK POINT

GENERAL NOTES:

1. PRIOR TO CONSTRUCTION, CONTRACTOR SHALL FIELD VERIFY ALL EXISTING DIMENSIONS AND ELEVATIONS SHOWN. SHOULD EXISTING DIMENSIONS AND ELEVATIONS DIFFER SIGNIFICANTLY, THE CONTRACTOR SHALL NOTIFY THE ENGINEER AS SOON AS POSSIBLE OF THE DISPARITY.
2. THE CONTRACTOR SHALL NOT BURN, CUT, DRILL OR MODIFY STRUCTURAL MEMBERS WITHOUT APPROVAL OF THE ENGINEER.
3. DO NOT USE DRAWING SCALES CONTAINED WITHIN THESE CONTRACT DOCUMENTS. SCALES ARE NOT ACCURATE AND ARE PROVIDED FOR CONVENIENCE ONLY.

REINFORCED CONCRETE:

1. ALL CONCRETE WORK SHALL CONFORM TO THE LATEST EDITIONS OF THE AMERICAN CONCRETE INSTITUTE PUBLICATIONS:
   - 1.1. ACI 117–10 SPECIFICATION FOR TOLERANCES FOR CONCRETE CONSTRUCTION AND MATERIALS.
   - 1.2. ACI 301–10 SPECIFICATIONS FOR STRUCTURAL CONCRETE
   - 1.3. ACI 304R–00(R09) GUIDE FOR MEASURING, MIXING, TRANSPORTING AND PLACING CONCRETE
   - 1.4. ACI 318–14 BUILDING CODE REQUIREMENTS FOR STRUCTURAL CONCRETE
   - 1.5. ACI 347R–14 GUIDE TO FRAMEWORK FOR CONCRETE
   - 1.6. ACI 350–06 CODE REQUIREMENTS FOR ENVIRONMENTAL ENGINEERING CONCRETE STRUCTURES.
   - 1.7. ACI 350.1–10 SPECIFICATION FOR TIGHTNESS TESTING OF ENVIRONMENTAL ENGINEERING CONCRETE CONTAINMENT STRUCTURES.
2. CONCRETE MIXTURES AND STRENGTHS SHALL COMPLY WITH THE REQUIREMENTS OF SPECIFICATION SECTION 03300.
3. CONCRETE MIX DESIGN SHALL BE SUBMITTED TO THE ENGINEER FOR REVIEW. SUBMITTAL SHALL CONTAIN:
   - MIX RECIPE
   - CURRENT CEMENT MANUFACTURER DATA SHEET
   - HISTORICAL TEST DATA WITH STANDARD DEVIATION PER ACI 301 CHAPTER 4 OR 3 POINT TRIAL BATCH CURVE DATA.
   - FINE AND COARSE AGGREGATE; GRADATION, ANY AVAILABLE ASTM TEST DATA FOR ALKALI SILICA REACTION (ASR), PIT ID.
   - ADMIXTURE DATA SHEETS.
4. CONCRETE TESTING SHALL BE PERFORMED BY THE CONTRACTOR FOR EACH INDIVIDUAL CONCRETE PLACEMENT. ALL TEST RESULTS SHALL BE PERFORMED, FORMALLY COMPILED AND SUBMITTED PER REQUIREMENTS OF SPECIFICATION SECTIONS 01330, 01400 & 03300. THE CONTRACTOR SHALL PROVIDE THE OWNER'S AGENT ACCESS TO THE AREAS TO SPOT BE TESTED.
5. STEEL REINFORCEMENT SHALL BE NEW BILLET CONFORMING TO ASTM A615, GRADE 60. SHOP DRAWINGS SHALL BE SUBMITTED FOR ALL STEEL REINFORCEMENT.
6. REINFORCEMENT SHALL BE DETAILED IN ACCORDANCE WITH LATEST EDITION ACI 301 AND CONCRETE REINFORCING STEEL INSTITUTE, LATEST EDITION, "MANUAL OF STANDARD PRACTICE" FOR DETAILING REINFORCED CONCRETE STRUCTURES.
7. CONCRETE CLEAR COVER TO REINFORCEMENT SHALL COMPLY WITH CONCRETE SPECIFICATION – 2, SHEET S–19.
8. PROVIDE KEYWAYS AT CONSTRUCTION JOINTS (C.J.) WHERE SHOWN ON DETAILS. CONSTRUCTION JOINTS AT THE LOCATIONS SHOWN ARE NOT OPTIONAL.
9. A 1/2" x 45° CHAMFER SHALL BE PROVIDED AT EXPOSED EDGES OF ALL CONCRETE WALLS, UNLESS OTHERWISE NOTED.
10. SEALANT SHALL COMPLY WITH CONCRETE SPECIFICATION – 3, SHEET S–20.
11. (DRILL & GROUT) – REFERS TO DRILLING INTO EXISTING CONCRETE TO THE SPECIFIED HOLE DIAMETER AND EMBEDMENT UNLESS OTHERWISE SHOWN AND ANCHORING THE REINFORCEMENT OR THREADED ROD WITH STRUCTURAL EPOXY ADHESIVE, "HIT–HY 200" HIGH STRENGTH INJECTION ADHESIVE SYSTEM BY HILTI CORP. INSTALL IN ACCORDANCE WITH MANUFACTURER'S RECOMMENDATION. MINOR RELOCATION, AS APPROVED BY THE ENGINEER, MAY OCCUR WHEN ENCOUNTERING EXISTING REINFORCEMENT. THREADED ROD SHALL BE TYPE 304 S.S. HILTI HAS ROD W/MATCHING HARDWARE. PRODUCT SUBSTITUTION IS NOT PERMITTED.
12. APPLY BONDING AGENT WHEN CASTING PROPOSED CONCRETE TO SOUND HARDENED CONCRETE.
13. SUPPORT BOTTOM LAYER OF MAT REINFORCEMENT FROM CONCRETE FILL WITH REINFORCEMENT CHAIRS OR PRECAST CONCRETE DOBIES.
14. SUPPORT UPPER LAYER OF MAT REINFORCEMENT FROM LOWER LAYER OF REINFORCEMENT WITH #4 STANDEES AT 4 FOOT ON CENTER EACH WAY.
15. PROVIDE CORNER BARS IN WALLS TO MATCH HORIZONTAL REINFORCEMENT.
16. WHERE MECHANICAL SPLICES ARE SHOWN, REINFORCEMENT SHALL BE SPLICED WITH ERICO LENTON THREADED COUPLERS. REINFORCEMENT SHALL BE TAPER THREADED TO ACCEPT COUPLERS.
17. JOINT WATERPROOFING SHALL BE W.R. MEADOWS MEL–ROL OR APPROVED EQUAL. CLEAN AND PRIME SURFACES TO BE WATERPROOFED PER MANUFACTURER'S RECOMMENDATIONS.
18. BACKFILLING ADJACENT TO WALLS SHALL NOT COMMENCE UNTIL EACH LIFT OF WALL BETWEEN CONSTRUCTION JOINTS IS COMPLETED, THE CONCRETE HAS REACHED ITS REQUIRED DESIGN STRENGTH AND ALL REQUIRED TEMPORARY SHORING IS IN PLACE.
19. FOR ADDITIONAL REINFORCEMENT AT OPENINGS (NOT SHOWN ON THE DRAWINGS), SEE CONCRETE SPECIFICATIONS – 2, SHEET S–19.
20. LIGHTWEIGHT CONCRETE FLOWABLE FILL– SHALL HAVE A MAXIMUM DENSITY OF 70 PCF AND A 28–DAY CONCRETE COMPRESSIVE STRENGTH OF 150 PSI. MAXIMUM LIFT HEIGHT SHALL BE 10'–0" WITH A 30 HOUR CURE BETWEEN SUCCESSIVE LIFT PLACEMENTS. FLOWABLE FILL MIXES SHALL COMPLY WITH THE REQUIREMENTS OF SPECIFICATION SECTION 02200.
21. CONTOURED CONCRETE FILL – SHALL INCLUDE POLYPROPYLENE FIBER REINFORCEMENT AT A RATE OF 3.0 LBS/CYD OF CONCRETE. FIBERS SHALL BE GRACE STRUX 90/4 OR APPROVED EQUIVALENT. FIBERS SHALL BE MIXED INTO THE CONCRETE IN COMPLIANCE WITH THE MANUFACTURER'S MIXING INSTRUCTIONS.
22. PROTECT CURING CONCRETE AND DO NO BACKFILL AGAINST OR IMPOSE CONSTRUCTION WORK TRAFFIC ON CONCRETE STRUCTURES UNTIL THE CONCRETE HAS ATTAINED AT LEAST 75% OF THE SPECIFIED 28–DAY COMPRESSIVE STRENGTH, AS DETERMINED BY "FIELD CURED" TEST CYLINDERS.

MASONRY NOTES:

1. THE MASONRY PORTIONS OF THIS STRUCTURE ARE DESIGNED ACCORDING TO THE LATEST ALLOWABLE STRESS DESIGN PROVISIONS OF THE MASONRY STANDARDS JOINT COMMITTEE (MSJC) BUILDING CODE REQUIREMENTS FOR MASONRY STRUCTURES (TMS 402) AND SPECIFICATIONS FOR MASONRY STRUCTURES (TMS 602) INCLUDING SECTIONS 2106 AND 2107 OF CHAPTER 21 IN THE MICHIGAN BUILDING CODE. MASONRY COMPONENTS HAVE BEEN DESIGNED ACCORDING TO THE PROVISIONS FOR SEISMIC DESIGN CATEGORY A.
2. ALL STRUCTURAL MASONRY IS TO BE CONSTRUCTED IN ACCORDANCE WITH THE LATEST MASONRY STANDARDS JOINT COMMITTEE (MSJC) BUILDING CODE REQUIREMENTS FOR MASONRY STRUCTURES (TMS 402) AND SPECIFICATIONS FOR MASONRY STRUCTURES (TMS 602). MASONRY SUBMITTALS ARE REQUIRED BY TMS 602 SECTION 1.5. MASONRY TESTING AND INSPECTIONS ARE REQUIRED BY TMS 602 SECTION 3.1. TABLE 4, LEVEL B QUALITY ASSURANCE.
3. ALL STRUCTURAL MASONRY HAS BEEN ENGINEERED IN ACCORDANCE WITH CHAPTER 8, ALLOWABLE STRESS DESIGN. COMPRESSION STRENGTH SHALL BE DETERMINED ACCORDING TO THE UNIT STRENGTH METHOD FOR CONCRETE MASONRY MSJC 1.4.B.2.b.
4. ALL CONCRETE MASONRY UNITS AND CONCRETE BRICK SHALL CONFORM TO ASTM C90 AND C140.
5. MORTAR SHALL CONFORM TO ASTM C270, AS FOLLOWS:
   IN CONTACT WITH EARTH – TYPE M
   NOT IN CONTACT WITH EARTH – TYPE M OR S
6. ADMIXTURE FOR MORTAR AND CONCRETE BRICK/BLOCK WATER REPELLENT SHALL BE "DRY–BLOCK" BY W.R. GRACE OR EQUAL BY KRETE INDUSTRIES. ADMIXTURE SHALL BE FIELD MIXED FOR THE MORTAR AND FACTORY MIXED FOR THE PRODUCT BEING FABRICATED.
7. LOAD BEARING BRICK AND BLOCK SHALL CONFORM TO ASTM C90, MEDIUM WEIGHT WITH NET AREA COMPRESSIVE STRENGTH = 2,000 PSI MINIMUM.
8. MASONRY GROUT SHALL BE TYPE S AND CONFORM TO ASTM C476 AND NCMA TEK NOTES 3–2A AND 9–4A WITH PEA GRAVEL AGGREGATE AND A MINIMUM COMPRESSIVE STRENGTH OF 2000 PSI.
9. PROVIDE HORIZONTAL WIRE TYPE REINFORCING WITH 9 GAUGE SIDE RODS AND 9 GAUGE CROSS RODS IN EVERY SECOND COURSE (16" O.C.), IN ALL MASONRY WALLS. PROVIDE "LADDER" TYPE REINFORCING ONLY IN WALLS WITH VERTICAL REINFORCING. PROVIDE ADJUSTABLE TIES AT ALL LINTELS AND CAVITY WALLS AT 16" O.C. MAXIMUM SPACING.
10. REINFORCING BARS, DOWELS AND TIES SHALL CONFORM TO ASTM A615, GRADE 60 AND SHALL BE INSTALLED PER NCMA TEK NOTE 3–3B.
11. UNLESS OTHERWISE NOTED LINTELS SHALL BEAR 8" MINIMUM ON SUPPORTING WALLS AND WALL SHALL BE GROUTED SOLID FULL HEIGHT FOR BEARING LENGTH.
12. UNLESS OTHERWISE NOTED, PROVIDE MASONRY LINTELS 16" DEEP MINIMUM WITH WIDTH MATCHING WIDTH OF CMU WALL. REINFORCE WITH (2)– #5 BARS TOP AND BOTTOM, UON.
13. FILL CORES CONTAINING REINFORCEMENT WITH GROUT. FOR ADDITIONAL LOCATIONS OF GROUT–FILLED CORES, SEE SPECIFICATION SECTION 04300.
14. UNLESS OTHERWISE NOTED, REINFORCE BOND BEAMS WITH (2)– #5 TOP AND BOTTOM BARS.
15. VERTICAL WALL REINFORCEMENT SHALL BE CENTERED IN THE BRICK AND BLOCK. USE SPACERS TO HOLD BARS IN POSITION UNTIL GROUTED IN.
16. ALL STEEL LINTELS SHALL BE GALVANIZED.
17. ALL STRUCTURAL MASONRY SHALL COURSE IN STANDARD RUNNING BOND. UNLESS NOTED OTHERWISE, ALL INTERSECTION BEARING WALLS, SHEAR WALLS OR OTHER STRUCTURAL WALLS SHALL BE LAID UP IN INTERLOCKED, BONDED COURSING, MECHANICAL ANCHORS OR WALL TIES MAY BE SUBSTITUTED WITH PRIOR APPROVAL BY THE ENGINEER.
18. PROVIDE BRACES TO THE WALLS TO RESIST WIND LOADS UNTIL THE MASONRY IS SUPPORTED BY THE ROOF STRUCTURE.
19. PROVIDE TEMPORARY SHORING TO SUPPORT LINTELS AND WALL CONSTRUCTION ABOVE LINTELS UNTIL THE MASONRY AND GROUT HAVE REACHED THEIR FULL SPECIFIED DESIGN STRENGTH.
20. SECURE VERTICAL WALL REINFORCEMENT DURING WALL CONSTRUCTION WITH REBAR POSITIONERS SPACED AT A MAXIMUM SPACING OF 48" OC VERTICALLY. REBAR POSITIONER SHALL BE "RB REBAR POSITIONER", COATED AND SIZED TO MATCH MASONRY WIDTH AS MANUFACTURED BY HOHMANN & BARNARD, INC.

DRILLED PIER FOUNDATION NOTES:

1. FOUNDATION EXCAVATION SHALL BE BY AUGER APPROPRIATELY SIZED FOR INDICATED PIER DIAMETER IN UNDISTURBED OR PROPERLY COMPACTED FILL, PER MDOT STANDARD SPECIFICATION SECTION 206.
2. FOUNDATION SHALL BEAR ON UNDISTURBED SOIL WITH A MINIMUM NET ALLOWABLE BEARING CAPACITY OF 3,000 PSF AND A MINIMUM TOTAL ALLOWABLE PASSIVE PRESSURE OF 3,000 PSF.
3. OBSERVATION AND TESTING OF EXISTING UNDISTURBED SOIL BY GEOTECHNICAL ENGINEER IS REQUIRED PRIOR TO PLACING PIER CONCRETE.
4. CONCRETE FOR DRILLED PIER SHALL BE PLACED DIRECTLY AGAINST UNDISTURBED SOIL; OVER–EXCAVATING AND THEN BACKFILLING AGAINST FORMS IS PROHIBITED.
5. CONTRACTOR TO PREVENT SLOUGHING OF UNSTABLE CLAY OR GRANULAR MATERIALS AND GROUNDWATER INFILTRATION BY MEANS OF A TEMPORARY STEEL CASING.
6. BOTTOM OF EXCAVATION SHALL BE FREE OF LOOSE OR DISTURBED SOILS PRIOR TO PLACING CONCRETE.
7. IF WATER IS PRESENT IN THE EXCAVATION, PUMP TO DRY CONDITION BEFORE PLACING CONCRETE.
8. CONCRETE SHALL BE PLACE USING THE FREE–FALL METHOD. DIRECT CONCRETE FLOW TO AVOID HITTING SIDES OF EXCAVATION AND REINFORCEMENT CAGE.
9. CONCRETE SLUMP SHALL BE BETWEEN 5 AND 7 INCHES.
10. IF WET CONDITIONS ARE ENCOUNTERED AND DEEMED UNAVOIDABLE (SEE NOTE 6), TREMIE – PLACE CONCRETE. TREMIE SHALL HAVE A PLUG TO PREVENT MIXING OF GROUNDWATER AND CONCRETE AT THE TIP OF THE TREMIE.
11. TREMIE – PLACED CONCRETE SLUMP SHALL BE BETWEEN 6 AND 8 INCHES.
12. CONCRETE SHALL BE PLACED IN ONE CONTINUOUS POUR.
13. DURING EXTRACTION OF TEMPORARY CASING AND/OR TREMIE, CONTRACTOR TO MAINTAIN A HEAD OF CONCRETE WITHIN CASING/TREMIE TO PREVENT INFILTRATION OF WATER AND/OR SOIL INTO THE EXCAVATION.
14. FILL ANY VOIDS OR ENLARGEMENTS IN DRILLED PIER SHAFT WITH CONCRETE WHEN PLACING SHAFT CONCRETE.
15. CONCRETE SHALL BE THOROUGHLY VIBRATED WITH MECHANICAL VIBRATORS IN ACCORDANCE WITH MDOT STANDARD SPECIFICATION SECTION 706.03.H.1.

STRUCTURAL STEEL NOTES:

A. GENERAL

1. ALL CONNECTIONS, DESIGN CALCULATIONS AND SHOP FABRICATION DRAWINGS SHALL BE PREPARED BY, OR UNDER THE DIRECT SUPERVISION OF A PROFESSIONAL ENGINEER REGISTERED IN THE STATE OF MICHIGAN AND SHALL BEAR THEIR SEAL. ALL APPLICABLE CALCULATIONS SHALL BE SEALED/CERTIFIED AND INCLUDED WITH THE APPROPRIATE SHOP FABRICATION DRAWING SUBMITTAL.
2. STRUCTURAL STEEL CONTRACTOR/FABRICATOR SHALL ESTABLISH FABRICATION SCHEDULE WITH SEQUENCING COORDINATED WITH THE OWNER PRIOR TO DETAILING AND FABRICATION ACTIVITIES. DRAWING SUBMITTAL REVIEW WILL BE BASED ON FABRICATION SEQUENCES. SUBMITTALS MUST BE MADE PRIOR TO FABRICATION. MULTIPLE SEQUENCE SUBMITTALS SHOULD NOT BE MADE. SUBMIT COMPLETE AND CHECKED ERECTION DRAWINGS WITH EACH STEEL SHOP DRAWING SUBMITTAL. PREFIX ALL ERECTION DRAWINGS WITH THE LETTER 'E'. RESUBMITTALS OF THE SAME ERECTION DRAWINGS OR CORRECTED DRAWINGS MUST INCLUDE THE CORRESPONDING 'E–SHEET'. SHOP DRAWINGS SUBMITTALS THAT DO NOT INCLUDE THE CORRESPONDING 'E–SHEET' IS CAUSE FOR REJECTION OF THE SUBMITTAL.
3. SUBSEQUENT SUBMITTAL AND REVIEW OF 'CORRECTED' SHOP DRAWINGS SHALL INCLUDE APPROPRIATE E–SHEETS WITH EACH REVISION 'CLOUDED' TO FACILITATE SUBMITTAL REVIEW.
4. THE ENGINEER'S SIGNATURE ON THE SHOP DRAWINGS IS TO BE INTERPRETED ONLY AS A REVIEW OF THE GENERAL FABRICATION DESIGN REQUIREMENTS. THE SIGNATURE DOES NOT RELIEVE THE CONTRACTOR OF THE NECESSITY TO CORRECT DETAILS ON THE DRAWINGS OR COMPLETED WORK IN THE FIELD AS MY THEREAFTER BE FOUND TO BE DEFICIENT. THE CONTRACTOR IS RESPONSIBLE FOR ALL DIMENSIONS NOTED ON THE SHOP DRAWINGS ALONG WITH ALL SHOP/FIELD FABRICATION ERRORS.
5. DESIGN, DETAILING, FABRICATION AND ERECTION OF STRUCTURAL STEEL SHALL CONFORM TO THE FOLLOWING PUBLICATIONS EXCEPT AS SPECIFICALLY INDICATED IN THE CONTRACT DOCUMENTS:
   A. AMERICAN INSTITUTE OF STEEL CONSTRUCTION (AISC) MANUAL OF STEEL CONSTRUCTION (14th EDITION–ASD) INCLUDING:
      - AISC 303 – CODE OF STANDARD PRACTICE FOR STEEL BUILDINGS AND BRIDGES, LATEST EDITION.
      - AISC 360 – SPECIFICATION FOR STRUCTURAL STEEL BUILDINGS, LATEST EDITION.
      - RSCS – SPECIFICATION FOR STRUCTURAL JOINTS USING HIGH–STRENGTH BOLTS, LATEST EDITION.
   B. AISC DESIGN GUIDE 27 – STRUCTURAL STAINLESS STEEL, LATEST EDITION.
   C. MIOSHA – PART 26 – SAFETY STANDARDS FOR STEEL ERECTION, FINAL RULE.
   D. GOVERNING LOCAL OR STATE CODES.
6. STRUCTURAL STEEL SHALL CONFORM TO THE FOLLOWING ASTM REQUIREMENTS (UON):
   A. ANCHOR BOLTS & THREADED RODS – ASTM F1554, GR 55 WITH SUPPLEMENT S1 (WELDABLE) (Fy=55,000 PSI)
   B. ANGLE, BARS, BASE PLATES, CHANNEL, PLATES – ASTM A572, GR 50 (Fy = 50,000 PSI)
   C. TUBING – SQUARE AND RECTANGULAR (HSS) – ASTM A500, GR B (Fy = 46,000 PSI)
   D. TUBING – ROUND (HSS) SHAPES – ASTM A500, GR B (Fy = 42,000 PSI)
   E. S & SPLIT TEES CUT FROM S SHAPES – ASTM A36 (Fy = 36,000 PSI)
   F. W & SPLIT TEES CUT FROM W SHAPES – ASTM A992 (Fy = 50,000 PSI)
7. STRUCTURAL STAINLESS–STEEL (SS) SHALL CONFORM TO THE FOLLOWING ASTM REQUIREMENTS (UON):
   A. ANCHOR BOLTS & THREADED RODS – ASTM F593–CWI 304 (Fy = 45,000 PSI)
   B. ANGLE, BARS, BASE PLATES, CHANNEL, S & SPLIT TEES CUT FROM S SHAPES, W & SPLIT TEES CUT FROM W SHAPES – ASTM A276, TP 304, QQS–763 (Fy = 34,000 PSI)
   C. PLATE, SHEET, STRIP – ASTM A240, 304 (Fy = 34,000 PSI)
   D. ROUND PIPE – ASTM A312, TP 304 SMLS (Fy = 34,000 PSI)
   E. TUBING – SQUARE & RECTANGULAR (HSS) – ASTM A554, TP 304 (Fy = 30,000 PSI)
   F. TUBING – ROUND (HSS) SHAPES – ASTM A554, TP 304 (Fy = 30,000 PSI)
8. BASE PLATE GROUT AND GROUT PADS IN GENERAL (UON) SHALL CONSIST OF NON–SHRINK, NON–METALLIC, NON–STAINING DIMENSIONALLY STABLE, INORGANIC GROUT AS MANUFACTURED BY THE EUCLID CHEMICAL COMPANY "NS GROUT", OR EQUAL, WITH A MINIMUM COMPRESSIVE STRENGTH OF 7,500 PSI AT 28–DAYS.
9. ANCHOR BOLT, SETTING DIAGRAMS AND TEMPLATES SHALL BE SUPPLIED BY THE STEEL CONTRACTOR AND SET PLUMB AND VERTICAL BY THE FOUNDATION CONTRACTOR. LEVELING NUTS AND/OR LEVELING PLATES SHALL BE USED FOR LEVELING COLUMN BASE PLATES. GROUT COLUMN BASE PLATES ONLY AFTER ALL STEEL HAS BEEN ERECTED, PLUMBED AND SQUARED.
10. ALL PROJECTED CORNERS, BURS, EXPOSED EDGES AND SHARP CORNERS OF STEEL SHALL BE GROUND SMOOTH.
11. STEEL ASSEMBLIES SHALL BE HOT DIP GALVANIZED AFTER FABRICATION PER ASTM A123.
12. FLAME CUTTING OF MEMBERS AND HOLES IS STRICTLY PROHIBITED. PLUG–WELD, GRIND AND RE–DRILL HOLES THAT DO NOT LINE UP (MIS–FABRICATED). REAM UNDERSIZED HOLES. CONTACT OWNERS REPRESENTATIVE OR ARCHITECT–ENGINEER FOR CONDITIONS WHERE MEMBER FIT–UP REQUIRES FIELD MODIFICATION. SEE SPECIFICATIONS FOR FURTHER INFORMATION.

B. BOLTING:

1. ALL STRUCTURAL STEEL CONNECTIONS SHALL BE BOLTED UNLESS NOTED OR DETAILED OTHERWISE ON THESE PLANS.
2. (HS) – REFERS TO HIGH STRENGTH BOLTS CONFORMING TO THE REQUIREMENTS OF ASTM F3125 GR A325.
3. STAINLESS–STEEL (SS) BOLTS SHALL CONFORM TO THE REQUIREMENTS OF A320 GR B8 CL2, Fy = 95,000 PSI MIN.
4. BOLTED CONNECTIONS SHALL CONSIST OF A MINIMUM OF (2)– 3/4" DIAMETER BOLTS AND SHALL BE HS UNLESS NOTED OR DETAILED OTHERWISE ON THESE PLANS. STAINLESS–STEEL (SS) BOLTS SHALL BE USED FOR BOLTED CONNECTIONS OF STRUCTURAL STAINLESS–STEEL (SS). STRUCTURES SHALL MINIMUM CONNECTION CAPACITY SHALL BE IN ACCORDANCE WITH SPECIFICATION FOR STRUCTURAL STEEL SECTION 05120.
5. ALL HOLES FOR BOLTS SHALL BE ACCURATELY SPACED AND SHALL BE A DIAMETER 1/16" GREATER THAN THE NOMINAL DIAMETER OF THE BOLT (STANDARD), UNLESS OTHERWISE NOTED ON THE DRAWINGS. FOR GALVANIZED MEMBERS, HOLES FOR BOLTS SHALL BE A DIAMETER 1/8" GREATER THAN THE NOMINAL DIAMETER OF THE BOLT (OVERSIZED), UNLESS OTHERWISE NOTED ON THE DRAWINGS.
6. ALL BOLTS (UON) SHALL BE HIGH STRENGTH BOLTS AND SHALL BE TIGHTENED BY CALIBRATED WRENCHES OR "TURN OF THE NUT" METHOD TO ACHIEVE A SLIP CRITICAL CONNECTION. IMPACT WRENCHES SHALL BE CALIBRATED DAILY FOR THE SIZE OF BOLTS BEING CURRENTLY PLACED. ONLY NEW BOLTS AND NUT ARE TO BE USED. HARDENED FLAT WASHERS SHALL BE USED IN THE CALIBRATOR, THE SAME AS IN THE ACTUAL STRUCTURE, ON THE TIGHTENED SIDE. LOCK WASHERS AND LOCK NUTS ARE STRICTLY PROHIBITED. ADDITIONALLY, THE USE OF MACHINE BOLTS FOR STRUCTURAL CONNECTIONS IS PROHIBITED.
7. HIGH STRENGTH BOLTS, NUTS AND WASHERS SHALL BE HOT DIP GALVANIZED PER ASTM F2329 (UON).

C. WELDING:

1. ALL WELDING AND WORKMANSHIP SHALL CONFORM TO THE FOLLOWING PUBLICATIONS EXCEPT AS SPECIFICALLY INDICATED IN THE CONTRACT DOCUMENTS:
   A. AMERICAN INSTITUTE OF STEEL CONSTRUCTION (AISC) MANUAL OF STEEL CONSTRUCTION (14th/ EDITION – ASD) INCLUDING:
      - AISC 303 – CODE OF STANDARD PRACTICE FOR STEEL BUILDINGS AND BRIDGES, LATEST EDITION.
      - AISC 360 – SPECIFICATION FOR STRUCTURAL STEEL BUILDINGS, LATEST EDITION.
   B. AMERICAN WELDING SOCIETY D.1.1 AND D.1.6 – CODE FOR WELDING IN BUILDING CONSTRUCTION AND APPLICABLE ADDENDA AND SUPPLEMENTS.
2. ALL SHOP AND FIELD WELDING SHALL BE DONE BY THE SHIELDED METAL ARC WELDING PROCESS AND BY PROPERLY QUALIFIED AND CERTIFIED WELDERS.
3. LOW HYDROGEN E–70 ELECTRODES 1/4" OR LESS IN DIAMETER SHALL BE USED. MINIMUM SIZE OF WELD PROVIDED TO TRANSMIT STRESSES SHALL BE 3/16".
4. WELD SIZE INDICATED IS THE LEG SIZE, OR THE SIZE OF CONTACT A WELD HAS WITH EACH MEMBER JOINED BY IT.
5. SURFACE OF MEMBERS TO BE WELDED SHALL BE FREE FROM LOOSE SLAG, SCALE, RUST, GREASE, PAINT OR OTHER FOREIGN MATERIAL. SURFACES WHICH WERE PAINTED BEFORE WELDING SHALL HAVE THE PAINT REMOVED TO EXPOSE CLEAN STEEL SURFACE PRIOR TO WELDING.

DEWATERING NOTES:

1. REMOVE STANDING WATER FROM AREAS WHERE WATER COLLECTS AND PREVENT SURFACE WATER FROM REACHING THE FOUNDATION EXCAVATIONS AND AREAS OF PREPARED SUBGRADE.
2. CONTRACTOR IS RESPONSIBLE FOR THE DEWATERING OF ALL EXCAVATED AREAS AND TO MAKE HIS OWN DETERMINATION OF WATER LEVELS THAT WILL EXIST DURING CONSTRUCTION. DEWATERING SHALL BE INCLUDED IN THE PROJECT AND SHALL NOT BE PAID FOR SEPARATELY. CONTRACTOR IS SOLELY RESPONSIBLE FOR HIS OWN DEWATERING MEANS AND METHODS.
3. REFER TO SECTION 02140 FOR ADDITIONAL DEWATERING REQUIREMENTS.

Know what's below. Call before you dig. 811

REV.	DESCRIPTION	DATE	DRAWN	CHECKED
	50% DESIGN SUBMITTAL	10–01–2021	PMH	SDH
	70% DESIGN SUBMITTAL	10–29–2021	PMH	SDH
	90% DESIGN SUBMITTAL	11–22–2021	PMH	SDH
	ISSUED FOR BIDS SET	12–13–2021	PMH	SDH

CITY OF ANN ARBOR
PUBLIC SERVICES
301 E. HURON STREET
P.O. BOX 8647
ANN ARBOR, MI 48107–8647
(734) 794–6410
www.a2gov.org

PROJECT MANAGEMENT - PUBLIC SERVICES - CITY OF ANN ARBOR

HEADWORKS IMPROVEMENTS PROJECT

PROJECT NOTES

SCALE: AS NOTED

DRAWING No.: 390

SHEET No.: S–16

1 VERTICAL REINFORCEMENT LOCATION & LAP SPLICE LENGTHS

MINIMUM LAP SPLICE LENGTH FOR MASONRY WALLS
BARS CENTERED IN WALL (SINGLE REINFORCING)

BAR SIZE	6" CMU	8" CMU	10" CMU	12" CMU	14" CMU	16" CMU
#3	18	18	18	18	18	18
#4	24	24	24	24	24	24
#5	-	30	30	30	30	30
#6	-	38	36	36	36	36
#7	-	-	42	42	42	42
#8	-	-	-	50	48	48
#9	-	-	-	64	54	54

MINIMUM LAP SPLICE LENGTH FOR MASONRY WALLS
BARS PLACED FOR MAXIMUM "d" (DOUBLE REINFORCING)

BAR SIZE	8" CMU	10" CMU	12" CMU	14" CMU	16" CMU
#3	18	18	18	18	18
#4	24	24	24	24	24
#5	30	30	30	30	30
#6	57	57	57	57	57
#7	-	80	80	80	80
#8	-	-	-	-	-
#9	-	-	-	-	-

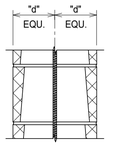

WALL SECTION-SINGLE REINFORCEMENT
"d" = 1/2 x SPECIFIED UNIT THICKNESS

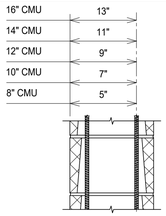

WALL SECTION-DOUBLE REINFORCEMENT
"d" = NORMAL UNIT THICKNES MINUS 3.00 INCHES

1. SPLICE ARE TABULATED BASED ON TMS 402 & MSJC WITH f'm = 2.0 KSI & fy = 60.0 KSI UNCOATED.
2. LAP SPLICE SHALL BE MADE WITH REINFORCEMENT IN CONTACT UNLESS NOTED OTHERWISE.
3. LAP SPLICE OF DIFFERENT SIZE SIZE BARS SHALL BE BASED ON THE SMALLER SIZE BAR UNLESS NOTED OTHERWISE.
4. ALL CELLS WITH REINFORCEMENT SHALL BE GROUTED SOLID FULL HEIGHT

2 BOND BEAM DETAILS

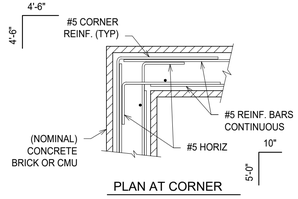

PLAN AT CORNER

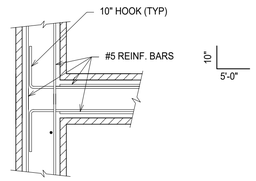

PLAN AT INTERSECTION

(VERT. REINF. NOT SHOWN FOR CLARITY. SEE BUILDING SECTIONS AND DETAILS FOR VERT. REINF.)

BOND BEAM HORIZ. REINF. DETAILS

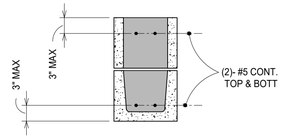

MULTIPLE COURSES
(2 COURSE DEPICTED IN THIS DETAIL)

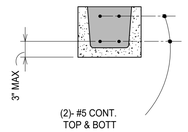

SINGLE COURSE

NOTES:

1. FOR BOND BEAM HORIZ. REINF. DETAILS: IF CMU IS LESS THAN 8" THICK NOMINALLY, 1 REINF. BAR CENTERED IN CELL. IF CMU IS 8" THICK OR GREATER, 2 REINF. BARS HORIZ. EACH FACE AS SHOWN.
2. SEE WALL ELEVATIONS FOR QUANTITY OF BOND BEAM COURESES.

3 MASONRY LINTELS

MASONRY LINTEL SCHEDULE

MARK	MIN. BEARING	NOMINAL WIDTH	NOMINAL HEIGHT PER COURSE	QUANTITY OF COURSES	TOTAL NOMINAL HEIGHT	HORIZONTAL BOTTOM REINF.	HORIZONTAL TOP REINF.	SHEAR REINF.
ML1	8"	8"	8"	1	8"	(2)- #5	—	—
ML2	8"	8"	8"	2	16"	(2)- #5	—	—

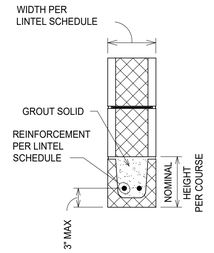

SINGLE COURSE

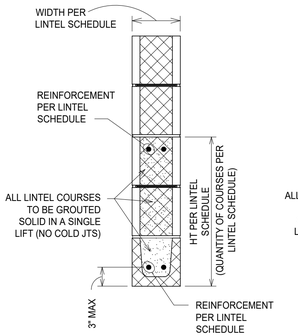

MULTIPLE COURSES
WITHOUT STIRRUPS

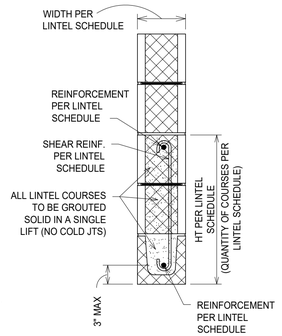

MULTIPLE COURSES
WITH STIRRUPS

4 INTERSECTING WALL DETAILS

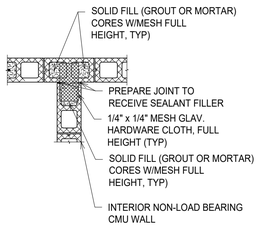

TYPICAL INTERSECTING
WALL DETAIL

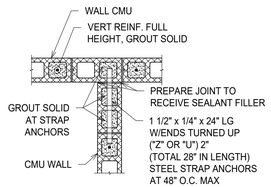

FLANGED SHEAR WALL
CONNECTION DETAIL

(APPLIES ONLY WHERE SPECIFICALLY CALLED FOR ON THE PLANS)

5 STEEL LINTELS

STEEL LINTEL SCHEDULE

MARK	MIN. BEARING	LINTEL SIZE	ANCHOR BOLTS	SLOTTED HOLE SIZE	LINTEL PLATE (TxW)	BEARING PLATE (TxWxL)
LS1	8"	2 - L4 x 3 x 3/8, LLV				

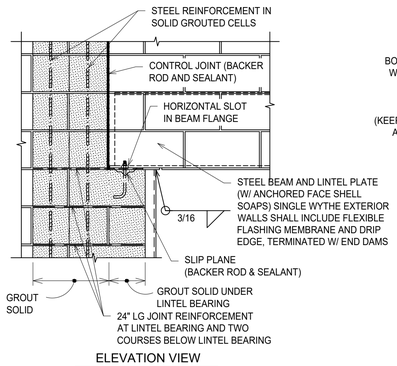

ELEVATION VIEW

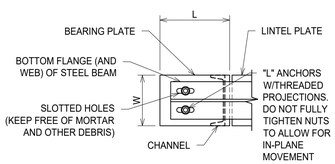

PLAN OF LINTEL/BEARING PLATE

NOTES:

1. DO NOT WELD STEEL BEAM PLATE LINTEL TO BEARING PLATE (TYPICAL BOTH SIDES)
2. STEEL BEAM TO HAVE SLOTS ON BOTTOM FLANGES TO ALLOW FOR IN-PLANE MOVEMENT.
3. SEE WALL ELEVATIONS FOR REINFORCEMENT AND CONTROL JOINT LAYOUT



DOUBLE ANGLE LINTEL DETAIL

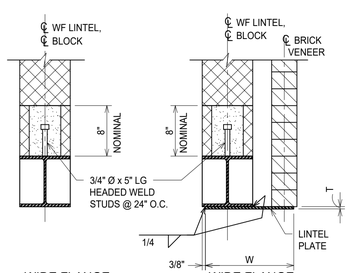

WIDE FLANGE
LINTEL DETAIL

WIDE FLANGE
W/LINTEL PLATE DETAIL

6 TYPICAL REINFORCED MASONRY WALL OPENINGS AND LINTELS

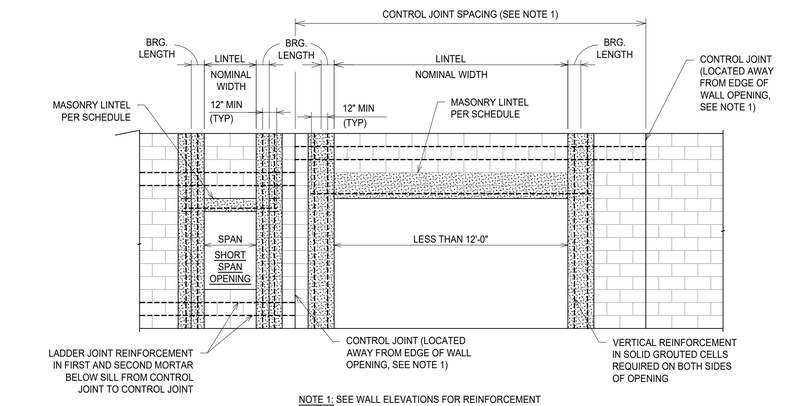

NOTE 1: SEE WALL ELEVATIONS FOR REINFORCEMENT AND CONTROL JOINT LAYOUT.

ELEVATION VIEW
(SPANS LESS THAN 12'-0")

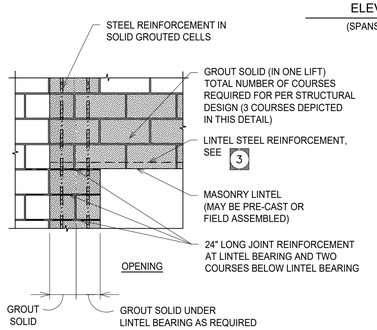

ELEVATION VIEW
(SPANS OF 12'-0" TO LESS THAN 20'-0")
(CONTROL JOINT LOCATED AWAY FROM EDGE OF WALL OPENING)

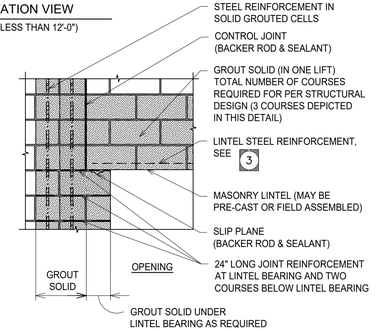

ELEVATION VIEW
(SPANS OF 12'-0" TO LESS THAN 20'-0")
(CONTROL JOINT @ EDGE OF WALL OPENING)

7 FOUNDATION DOWEL DETAIL

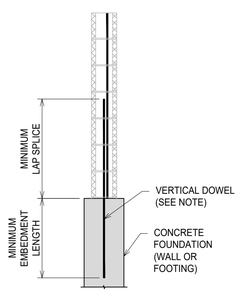

1. DRILL & GROUT DOWELS MAY BE USED IN LIEU OF EMBEDDED DOWELS IF APPROVED BY THE ENGINEER.
2. DOWEL LAYOUT TO BE COORDINATED WITH MASON PRIOR TO EMBEDMENT IN CONCRETE.

8 MASONRY PLAN DETAILS, END WALL

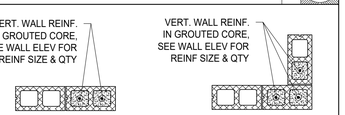

TYPICAL END OF WALL

TYPICAL CORNER

9 MASONRY PLAN DETAILS, TYPICAL JAMB

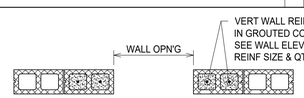

MASONRY LINTEL

PROVIDE A MINIMUM OF TWO BAR AT EACH JAMB PLUS AN ADDITIONAL BAR FOR EACH BAR INTERRUPTED DUE TO THE WALL OPENING. TYPICAL FOR ALL OPENINGS IN EXTERIOR WALLS 6'-0" OR GREATER (UON)

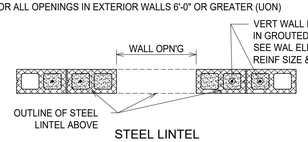

STEEL LINTEL

PROVIDE A MINIMUM OF TWO BAR AT EACH JAMB PLUS AN ADDITIONAL BAR FOR EACH BAR INTERRUPTED DUE TO THE WALL OPENING. TYPICAL FOR ALL OPENINGS IN EXTERIOR WALLS 6'-0" OR GREATER (UON)

10 BOND BEAM WITH TIMBER SILL PLATE DETAIL

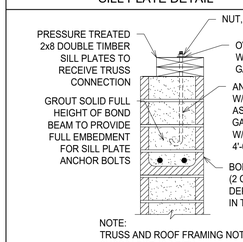

NOTE:
TRUSS AND ROOF FRAMING NOT SHOWN FOR CLARITY.

MULTIPLE COURSES

NOTES:

1. FOR BOND BEAM HORIZ. REINF. DETAILS: IF CMU IS LESS THAN 8" THICK NOMINALLY, 1 REINF. BAR CENTERED IN CELL. IF CMU IS 8" THICK OR GREATER, 2 REINF. BARS HORIZ. EACH FACE AS SHOWN.
2. SEE WALL ELEVATIONS FOR QUANTITY OF BOND BEAM COURESES.

811 Know what's below. Call before you dig.

REV.	DESCRIPTION	DATE	DRAWN	CHECKED
	50% DESIGN SUBMITTAL	10-01-2021	PMH	SDH
	70% DESIGN SUBMITTAL	10-29-2021	PMH	SDH
	90% DESIGN SUBMITTAL	11-22-2021	PMH	SDH
	ISSUED FOR BIDS SET	12-13-2021		

CITY OF ANN ARBOR
PUBLIC SERVICES
301 E. HURON STREET
P.O. BOX 8647
ANN ARBOR, MI 48107-8647
734.794.6410
www.a2gov.org

PROJECT MANAGEMENT - PUBLIC SERVICES - CITY OF ANN ARBOR

HEADWORKS IMPROVEMENTS PROJECT

MASONRY SPECIFICATION

SCALE: AS NOTED

DRAWING No.: 395

SHEET No. S-17

CONCRETE SLAB FINISHES — 3A 1

SLAB SURFACE	TYPE OF FINISH: INITIAL	TYPE OF FINISH: FINAL	TOLERANCE MEASURED ANYWHERE IN ANY DIRECTION (3)	REMARKS
SURFACES TO RECEIVE BONDED CONCRETE TOPPING	STRUCK OFF & LEVELED	SCRATCHED	1/4" IN 2 FEET	FINAL FINISH WITH STIFF BRUSHES OR RAKES TO ROUGHEN PRIOR TO FINAL SET
SURFACES TO RECEIVE WATERPROOF MEMBRANE OR NONCOMPOSITE TOPPING	STRUCK OFF & LEVELED	FLOATED (1)	1/8" IN 10 FEET	
EXTERIOR SLABS OR INTERIOR SLABS SUBJECT TO VEHICULAR TRAFFIC	FLOATED (1)	BROOM	1/8" IN 10 FEET	FINAL FINISH WITH BROOM, FOLDED BURLAP OR CANVAS BELT DRAWN ACROSS SURFACE
LANDINGS & STAIRS	FLOATED (1)	NON-SLIP (ABRASIVE)	1/8" IN 10 FEET	BROOM
FLOORS OF BUILDINGS, TANKS, FLUMES, WETWELLS & ALL OTHER TOP SURFACES	FLOATED (1)	TROWELED (2)	1/8" IN 10 FEET	

FLOATED SURFACE FINISH :

(1) BEGIN FLOATING WHEN WATER SHEEN HAS DISAPPEARED & THE SURFACE HAS STIFFENED SUFFICIENTLY TO PERMIT THE OPERATION.
CHECK TOLERANCE DURING & AFTER FIRST FLOATING.
CUT DOWN HIGH SPOTS & FILL LOW SPOTS.
REFLOAT SLAB TO A UNIFORM SANDY TEXTURE.

(2) POWER TROWEL AFTER FLOATING IS COMPLETED TO PRODUCE A SMOOTH SURFACE RELATIVELY FREE FROM DEFECTS, BUT WITH SOME TROWEL MARKS.
HAND TROWEL AFTER SURFACE HAS HARDENED SUFFICIENTLY, CONSOLIDATE THE SURFACE THOROUGHLY WITH ADDITIONAL HAND TROWELING.
FINAL HAND TROWEL WHEN A RINGING SOUND IS PRODUCED BY THE TROWEL MOVING ACROSS THE SURFACE. TROWEL TO PRODUCE A SURFACE UNIFORM IN TEXTURE & APPEARANCE WHICH IS ESSENTIALLY FREE OF TROWEL MARKS.

(3) MEASURE TOLERANCE WITH A STRAIGHTEDGE.
CORRECT VARIATIONS EXCEEDING SPECIFIED TOLERANCE BY GRINDING.
DO NOT CORRECT VARIATIONS BY PATCHING LOW SPOTS.

VERIFY ELEVATIONS OF FLOOR DRAINS & SLOPE FLOORS TO DRAINS.
DEPRESS SLABS AS REQUIRED FOR ARCHITECTURAL FLOOR FINISHES THAT REQUIRE RECESS.

LIQUID MEMBRANE FORMING COMPOUNDS — 3A 6

SURFACE TO BE TREATED	COMPOUND DESCRIPTION	TYPE	No. OF COATS: INITIAL (1)	No. OF COATS: FINAL (2)	MANUFACTURER/PRODUCT OR EQUAL: L & M	W.R. MEADOWS INC.	DAYTON-SUPERIOR
CONCRETE SURFACES EXPOSED AFTER COMPLETION OF STRUCTURE TO 1'-0" BELOW FINISH GRADE	WATERPROOFING ACRYLIC SEALER	A	NONE	2	"DRESS & SEAL"	"CS-309-25"	"CURE & SEAL LV J202UV"
INTERIOR FLOORS NOT EXPOSED TO WET ENVIRONMENT EITHER WITH OR WITHOUT APPLIED FINISHES	SILICATE CURE HARDENER	B	1	NONE	"CHEM HARD"	"MED-CURE"	"DENSIFIER J13"
EXPOSED FLOORS OF TANKS, FLUMES, WETWELL, TOP SURFACE OF TANK ROOF	ACRYLIC CURE SEAL & DUSTPROOFER CONFORM TO ASTM C309 MIN. 30% SOLIDS CONTENT	C	1	1	"DRESS & SEAL 30"	"VOCOMP-30"	"CURE & SEAL LV J23UV"
ALL OTHER SURFACES NOT IN CONTACT WITH FORMS & FORMED SURFACES IF FORMS REMOVED DURING CURING PERIOD.	RESIN CURE ASTM C309 TYPE I-D WITH DYE	D	1	NONE	"L&M CURE R"	"1100 SERIES"	"CLEAR RESIN CURE J11W"

(1) APPLY INITIAL COAT IMMEDIATELY AFTER FINAL FINISHING IS COMPLETED.

(2) APPLY FINAL COAT(S) AFTER COMPLETION OF CONSTRUCTION.

APPLY COMPOUNDS IN ACCORDANCE WITH MANUFACTURER'S WRITTEN RECOMMENDATIONS.
SUPPLY COMPOUNDS THAT ARE COMPATIBLE WITH SUBSEQUENT SURFACE TREATMENT.

WEATHER CONDITIONS — 3A 13

WEATHER CONDITION: TYPE	WEATHER CONDITION: DESCRIPTION	AIR TEMPERATURE	REQUIRED CONCRETE TEMPERATURE: AT TIME OF PLACEMENT: SECTIONS LESS THAN 12" MIN.	SECTIONS LESS THAN 12" MAX.	SECTIONS OVER 12" MIN.	SECTIONS OVER 12" MAX.	MASS CONCRETE MIN.	MASS CONCRETE MAX.	DURING CURING PERIOD MIN.	DURING CURING PERIOD MAX.	MAXIMUM RATE OF TEMPERATURE DROP: MASS CONCRETE 1 HR.	MASS CONCRETE 24 HRS.	ALL OTHER CONCRETE 1 HR.	ALL OTHER CONCRETE 24 HRS.
COLD (1)	MEAN DAILY TEMPERATURE LESS THAN 40° F.	BELOW 0°F.	70°F.	90°F.	60°F.	90°F.	55°F.	70°F.						
		0°F.+ TO 30°F.	65°F.	90°F.	55°F.	90°F.	50°F.	70°F.	50°F.	70°F.	3°F.	30°F.	5°F.	50°F.
		30°F.+ TO 45°F.	60°F.	90°F.	50°F.	90°F.	45°F.	70°F.						
HOT (2)	COMBINATION OF HIGH AIR TEMPERATURE, REDUCED HUMIDITY & INCREASED WIND VELOCITY TENDING TO IMPAIR CONCRETE QUALITY	–	90°F.	–	90°F.	–	70°F.	–	–	3°F.	30°F.	5°F.	50°F.	

(1) SUBMIT PROPOSED METHODS OF HEATING, HOUSING, INSULATING & COVERING TO MAINTAIN REQUIRED TEMPERATURES WITHOUT DAMAGE TO CONCRETE. FOLLOW DETAILED RECOMMENDATIONS OF ACI 306R FOR CURING PERIOD.

(2) SUBMIT PROPOSED METHODS OF WINDBREAKS, SHADING, SPRINKLING OR WET COVERING WITH LIGHT COLORED MATERIAL. FOLLOW RECOMMENDATIONS OF ACI 305R.

PREPARATION BEFORE PLACING — 3A 18

COMPLETE FORMWORK & REMOVE ICE, SNOW & WATER.
PLACE & SECURE REINFORCEMENT.
POSITION & SECURE EMBEDDED ITEMS.
OBTAIN APPROVAL FOR PREPARATION.
SUBMIT PROPOSED METHODS OF CONVEYING & CONSOLIDATING EACH TYPE OF ELEMENT.
PLAN SIZE OF PLACING & FINISHING CREWS WITH DUE REGARDS FOR EFFECTS OF TEMPERATURE & ATMOSPHERIC CONDITIONS ON THE RATE OF HARDENING OF CONCRETE TO COMPLETE EACH PLACEMENT IN A CONTINUOUS OPERATION.
CONSTRUCT TEMPORARY RUNWAYS, FOR CONVEYING EQUIPMENT, SUPPORTED DIRECTLY ON FORMWORK OR STRUCTURAL SUPPORTS WITHOUT RESTING ON REINFORCEMENT OR FRESH CONCRETE.
CLEAN CONVEYING EQUIPMENT THOROUGHLY.
PREPARE SUBGRADE FOR SLABS ON GRADE :
REMOVE FROST FROM GROUND IF PRESENT.
MOISTEN SUBGRADE IN ADVANCE OF PLACEMENT AVOIDING SOFT SPOTS & FREE STANDING WATER.
PREPARE HARDENED CONCRETE SURFACES, SEE 3A 70
ALLOW SPECIFIED TIME TO ELAPSE PRIOR TO PLACEMENT AS REQUIRED, SEE 3A 22

MUDMAT — 3A 23

PROVIDE MUDMAT OF 3" MINIMUM THICKNESS AT LOCATIONS SHOWN ON DRAWINGS.
CHECK SUBGRADE FOR CONFORMANCE WITH REQUIRED ELEVATION.
PLACE UNIFORM MUDMAT ON PROPERLY LEVELED SUBGRADE.

RUBBED SURFACE FINISH — 3A 24

PREPARE, RUB & CLEAN SURFACE IN ACCORDANCE WITH MDOT "2012 STANDARD SPECIFICATIONS FOR CONSTRUCTION", SECTIONS 706.03.R, FINISHING HARDENED CONCRETE, SUBSECTION 2., RUBBED SURFACE FINISH.

REMOVAL OF LAITANCE — 3A 25

REMOVE LAITANCE, THE LAYER OF WEAK NON-DURABLE MATERIAL CONTAINING CEMENT & FINES BROUGHT TO THE TOP OF OVERWET CONCRETE BY BLEEDING & REPAIR SURFACE.
AVOID FORMATION OF LAITANCE BY PROPER WORKING, FINISHING AND CURING METHODS.

READY MIX CONCRETE — 3A 19

BATCH, MIX & TRANSPORT CONCRETE IN ACCORDANCE WITH ASTM C94/C94M, AS FOLLOWS:
SECTION 8 "MEASURING MATERIALS"
SECTION 9 "BATCHING PLANT"
SECTION 10 "MIXERS & AGITATORS"
SECTION 11 "MIXING & DELIVERY"
SECTION 13 "INSPECTION: MATERIALS, PRODUCTION, DELIVERY"
SECTION 16 "BATCH TICKET INFORMATION", INCLUDING TYPE OF CEMENT, TYPE & BRAND OF ALL ADMIXTURES & MAXIMUM SIZE OF AGGREGATE.

PLANT EQUIPMENT & FACILITIES SHALL CONFORM TO "CHECK LIST FOR CERTIFICATION OF READY MIXED CONCRETE PRODUCTION FACILITIES" OF THE "NATIONAL READY MIXED CONCRETE ASSOCIATION."
CONTROL ADDITION OF ADMIXTURES WITH AN APPROVED MECHANICAL DISPENSING DEVICE.
SUPPLY CONCRETE IN QUALITY REQUIRED FOR IMMEDIATE USE, ELAPSE TIME BETWEEN INTRODUCTION OF MIXING WATER & COMPLETION OF DISCHARGE SHALL NOT EXCEED 1 1/2 HOURS.
DO NOT USE RETEMPERED OR PARTIALLY SET CONCRETE.
ADD WATER AT SITE ONLY IF MAXIMUM SLUMP & MAXIMUM WATER/CEMENT RATIO ARE NOT EXCEEDED.

CONCRETE PROTECTION — 3A 26

PROTECT FRESH CONCRETE FROM RAIN, SNOW, EXCESSIVELY HOT OR COLD TEMPERATURES & OTHER ADVERSE WEATHER CONDITIONS BY USE OF TARPAULINS OR OTHER SUITABLE METHODS.
PROTECT CURING CONCRETE FROM DAMAGING MECHANICAL DISTURBANCES SUCH AS LOAD STRESSES, HEAVY SHOCK & EXCESSIVE VIBRATION.
PROTECT FINISH CONCRETE SURFACES FROM DAMAGE FROM CONSTRUCTION EQUIPMENT, MATERIALS OR METHODS & BY RAIN OR RUNNING WATER.
DO NOT LOAD SELF SUPPORTING ELEMENTS IN SUCH A WAY AS TO OVERSTRESS THE CONCRETE.
DO NOT BACKFILL CONCRETE WALLS SUPPORTING SLABS UNTIL THE SLAB IS COMPLETELY PLACED & THE WALL & THE SLAB HAVE ATTAINED THE SPECIFIED 28 DAY COMPRESSIVE STRENGTHS.

FORMWORK REQUIREMENTS — 3A 2

USE FORMS, AS REQUIRED TO CONFINE CONCRETE & SHAPE IT TO REQUIRED DIMENSIONS.
DESIGN, ENGINEERING & CONSTRUCTION OF THE FORMWORK SHALL BE THE RESPONSIBILITY OF THE CONTRACTOR.
REFER TO ACI 347R "GUIDE TO FORMWORK FOR CONCRETE".
DESIGN FORMWORK IN ACCORDANCE WITH ACI 347R, CHAPTER 4, "DESIGN", & APPLICABLE PROVISIONS OF THE BUILDING CODE.
CONSTRUCT FORMWORK IN ACCORDANCE WITH ACI 347R, CHAPTER 5 "CONSTRUCTION."
CONSTRUCT FORMS OF METAL, WOOD OR OTHER APPROVED MATERIAL. USE SECTIONAL FORM PANELS WHERE PRACTICABLE. PROVIDE FOR FORM REMOVAL WITHOUT DAMAGE TO CONCRETE.
FACILITATE CLEANING & INSPECTION BY PROVIDING TEMPORARY OPENINGS AT BOTTOM OF WALL FORMS & OTHER POINTS AS REQUIRED.
FACE FORMS WITH MATERIALS AS SHOWN IN "CONCRETE FORMED SURFACE FINISHES" ON THIS DRAWING.
CAMBER FORMS TO COMPENSATE FOR ANTICIPATED DEFLECTION IN FORMS PRIOR TO HARDENING OF CONCRETE.
TIE DOUBLE FACE FORMS WITH A COMMERCIALLY MANUFACTURED TYPE FORM TIE SUBJECT TO APPROVAL. DO NOT USE NONFABRICATED WIRE TIES AFTER FORM REMOVAL, EMBEDDED PORTION OF FORM TIE SHALL BE A MINIMUM OF 1" FROM CONCRETE SURFACE.
TIE SINGLE FACE FORMS TO PERMANENT SHEET PILING WITH MECHANICAL ANCHORAGE SUBJECT TO APPROVAL.
CHAMFER EXPOSED EDGES & NON-REENTRA 3/4" – 45° BEVEL UNLESS OTHERWISE SHOWN.
MAINTAIN FORMS IN GOOD CONDITION AT ALL TIMES.
CLEAN FORMS OF HARDENED MORTAR & DEBRIS BEFORE EACH USE.
COAT FORMS, PRIOR TO PLACEMENT OF REINFORCEMENT, WITH NON-STAINING TYPE FORM COATING MATERIAL, SUBJECT TO APPROVAL, THAT WILL NOT DISCOLOR OR OTHERWISE DAMAGE THE CONCRETE OR PREVENT APPLICATION OF SURFACE FINISH.
SUPPORT FORMWORK SAFELY BY PROVIDING ADEQUATE SHORING AND BRACING.
FORMS SHALL BE MORTAR TIGHT AT THE TIME OF CONCRETE PLACEMENT.
PROVIDE APPROVED COMBINATION CLIP & FORM SPREADER WITH PLASTIC TIPS FOR WALL FORMWORK. MINIMUM SPACING SHALL BE 8'-0" O.C. VERTICAL & 4'-0" HORIZONTAL.

MOLDING DETAILS — 3A 7

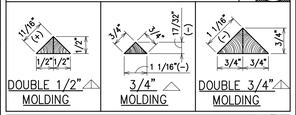

DOUBLE 1/2" MOLDING | 3/4" MOLDING | DOUBLE 3/4" MOLDING

PATENTED FORMS & SHORES — 3A 12

SUBMIT MANUFACTURERS INFORMATION REGARDING LOAD CARRYING CAPACITY, WORKING LOADS, BRACING REQUIREMENTS & CONNECTIONS WHEN PATENTED FORMS &/OR SHORES ARE PROPOSED FOR FORMWORK ELEMENTS.

EARTH FORMS — 3A 14

DO NOT PLACE CONCRETE AGAINST SOFT, WET, SOGGY OR FROZEN GROUND.
EARTH, FORMED SLOPING SURFACES MAY BE USED, SUBJECT TO OWNERS APPROVAL, PROVIDED THAT THE SURFACE CAN BE TRIMMED NEATLY & THE SLOPE DOES NOT EXCEED ONE VERTICAL ON/ONE HORIZONTAL.

REPAIR SURFACE DEFECTS — 3A 16

REMOVE DEFECTIVE CONCRETE DOWN TO SOUND CONCRETE.
CUT EDGES PERPENDICULAR TO THE SURFACE OR SLIGHTLY UNDERCUT TO MINIMUM DEPTH OF 1". FEATHER EDGES ARE NOT PERMITTED.
CLEAN SURFACE THOROUGHLY.
SATURATE PATCH AREA & SURROUNDING AREA 6" BEYOND PATCH AREA WITH WATER FOR A MINIMUM OF 3 HOURS. APPLY BONDING AGENT, SEE 3A 79
ALLOW BONDING AGENT TO DRY PRIOR TO PLACING PATCHING MORTAR.
POINT & EVEN AREA WITH A PATCHING MORTAR CONSISTING OF CEMENT & FINE AGGREGATE OF SAME PROPORTIONS AS CONCRETE, MIXED WITH MINIMUM WATER REQUIRED FOR MIXING & HANDLING.
STRIKE OFF SURFACE SLIGHTLY HIGHER THAN SURROUNDING SURFACE.
FINAL FINISH WITH WOOD TOOL AFTER LAPSE OF 1 HOUR TO ALLOW INITIAL SHRINKAGE.
DAMP CURE PATCHED AREA FOR A MINIMUM OF 7 DAYS.
PATCH FORM TIE HOLES AS FOLLOWS :

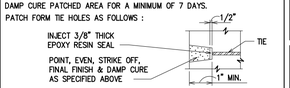

TIE PATCH DETAIL

FORMED SURFACE TOLERANCE — 3A 27

ELEMENT	VARIATION: TYPE	VARIATION: LENGTH	TOLERANCE: PLUS (IN.)	TOLERANCE: MINUS (IN.)
COLUMNS : PIERS & WALLS (BUILDING LINES)	PLUMB	IN ANY 10 FT.	+ 1/4	– 1/4
		ENTIRE	+ 1	–1
	ESTABLISHED PLAN DIMENSIONS	IN ANY 20 FT.	+ 1/2	– 1/2
		ENTIRE	+ 1	–1
HORIZONTAL ELEMENTS	LEVEL OR ELEVATION	IN ANY 20 FT.	+ 3/8	– 3/8
		ENTIRE	+ 3/4	– 3/4
CONCRETE STAIRS	IN A FLIGHT OF STAIRS	RISE	+ 1/8	– 1/8
		TREAD	+ 1/4	– 1/4
	CONSECUTIVE STEPS	RISE	+ 1/16	– 1/16
		TREAD	+ 1/8	– 1/8
BEAMS & COLUMNS	SIZE		+ 1/2	– 1/4
SLABS & WALLS	THICKNESS			
OPENINGS & SLEEVES	SIZE & LOCATION OF SLAB & WALL OPENINGS		+ 1/4	– 1/4
	PLAN DIMENSIONS		+ 2	– 1/2
FOOTINGS	MISPLACEMENT; * 2% OF WIDTH IN DIRECTION OF MISPLACEMENT (2" MAXIMUM)		*	*
	THICKNESS		–	– 5%

CONCRETE TESTING AGENCY SERVICES — 3A 3

DESIGNATED CONCRETE TESTING AGENCY SHALL PERFORM THE FOLLOWING SERVICES :

REQUIRED SERVICE	FREQUENCY
CONCRETE MIXTURE DESIGNS	ONE PROPOSED DESIGN FOR EACH REQUIRED CONCRETE MIXTURE
REVISED CONC. MIXTURE DESIGNS	PROPOSED REDESIGNS OF APPROVED CONCRETE MIXTURES DUE TO REVISIONS OF THE MATERIAL OR PROPORTIONS
SAMPLING & TESTING PRODUCTION MATERIAL	MATERIAL: ONE TEST PER: 1,000 TON; ASTM: C150
	CEMENT: 1,000 TON; C33
	FINE AGGREGATE: 2,000 TON; C33
	COARSE AGGREGATE: 2,000 TON; C33
INSPECT CONCRETE BATCHING & MIXING @ PLANT	DURING ALL PLACEMENTS OF 50 CU.YDS. OR GREATER IN ANY ONE DAY & DURING PRODUCTION OF ALL CONCRETE OF 5,000 P.S.I. OR GREATER.
CONCRETE TEST ETS	ONE CONCRETE TEST SET PER 100 CU.YDS. OR FRACTION THEREOF PLACED IN ANY ONE DAY FOR EACH MIXTURE USED.
SLUMP & AIR TESTS	CONCRETE TESTING AGENCY REPRESENTATIVE TO BE AVAILABLE TO PERFORM SLUMP & AIR TESTS WHILE ON SITE FOR CONCRETE TEST SETS.
TESTING CONCRETE IN PLACE	AS REQUIRED BY CONCRETE TEST SET, FAILURES OR QUESTIONABLE CONCRETE DUE TO METHOD OF PLACING, CURING & PROTECTING.
CONTRACTOR REQUESTED TESTING)	REQUIRED FOR PROPOSED REDUCTIONS IN REQUIRED TIME FOR CURING, FORM REMOVAL, SHORE REMOVAL OR PLACING STRUCTURAL ELEMENTS IN SERVICE.

FAILURE TO DETECT DEFECTIVE WORK OR MATERIAL SHALL NOT PREVENT LATER REJECTION WHEN SUCH DEFECT IS DISCOVERED NOR SHALL IT OBLIGATE THE OWNER FOR FINAL ACCEPTANCE.
REQUIRED CONCRETE TESTING SERVICES, SHALL BE PERFORMED AT THE CONTRACTOR'S EXPENSE AT NO ADDITIONAL COST TO THE OWNER.

TESTING CONCRETE IN PLACE — 3A 8

NONDESTRUCTIVE TEST METHODS MAY BE USED TO DETERMINE RELATIVE STRENGTHS AT VARIOUS LOCATIONS IN THE STRUCTURE & TO AID IN SELECTION OF AREAS TO BE CORED. TAKE 3 REPRESENTATIVE CORES FROM EACH ELEMENT OR AREA THAT IS CONSIDERED DEFICIENT. LOCATE CORES AS DIRECTED BY OWNER TO LEAST IMPAIR THE STRENGTH OF STRUCTURE. OBTAIN & TEST 4" MINIMUM DIAMETER CORES IN ACCORDANCE WITH ASTM C42/C42M & AS FOLLOWS:

IN SERVICE CONDITION	SPECIMEN CONDITIONING	TEST CONDITION
DRY	AIR DRY FOR 7 DAYS; TEMPERATURE 60° F 80° F. RELATIVE HUMIDITY LESS THAN 60%	DRY
MORE THAN SUPERFICIALLY WET	MOISTURE CONDITIONING IN ACCORDANCE WITH ASTM C42/C42M	WET

FILL CORE HOLES WITH LOW SLUMP CONCRETE OF REQUIRED STRENGTH OR NON-SHRINK GROUT AS DIRECTED BY THE OWNER. SEE "REPAIR SURFACE DEFECTS", ON THIS DRAWING.

CONCRETE PLACING UNDERWATER — 3A 28

GENERALLY, PLACING CONCRETE UNDERWATER IS NOT PERMITTED.
WHERE CONCRETE MUST BE PLACED UNDERWATER, THE TREMIE METHOD SHALL BE USED.
SUBMIT PROPOSED TREMIE METHOD FOR APPROVAL, INCLUDING PROPOSED CHANGES IN CONCRETE MIXTURES.

CONCRETE MIXTURE DESIGNS — 3A 4

DESIGN CONCRETE MIXTURE TO :
1. PRODUCE AVERAGE COMPRESSIVE STRENGTH IN ACCORDANCE WITH ACI 301, SECTIONS 4.2.3.1 & 4.2.3.2
2. MAXIMUM WATER/CEMENT RATIO.

PROVIDE INFORMATION FOR EACH MATERIAL AS FOLLOWS :

MATERIAL	MANUFACTURING: M	BRAND: B	SOURCE: SO	SPECIFICATION: SP
CEMENT	M	B	SO	SP
FINE AGGREGATE	–	–	SO	SP
COARSE AGGREGATE	–	–	SO	SP
WATER	–	–	SO	–
AIR-ENTRAINING ADMIXTURE	M	B	–	SP
EACH WATER REDUCING ADMIXTURE	M	B	–	SP

SAMPLE & TEST FOR CONFORMANCE WITH SPECIFICATIONS & MDOT MICHIGAN TEST METHODS.

MATERIAL	SPECIFICATION
CEMENT	ASTM C150 C3A : 12% MAX. Na2O+0.658K2O≤0.60%
FINE AGGREGATE	MDOT SECT.902.09 ASTM C33
COARSE AGGREGATE	ASTM C33 MDOT SECT. 902.03 MTM 102,110 & 115
AIR-ENTRAINING ADMIXTURE	SUBMIT MANUFACTURER CERTIFICATION OF COMPLIANCE

INCLUDE INFORMATION FOR EACH DESIGN AS FOLLOWS :

PROPORTIONS	MATERIAL PROPORTIONS BY WEIGHT & BY VOLUME
TESTING	PROVIDE ONE CONCRETE TEST SET FOR EACH DESIGN, AS SHOWN ON THIS DRAWING EXCEPT : MOLD 6 SPECIMENS; LAB CURE 3 FOR 7 DAYS & TEST; LAB CURE 3 FOR 28 DAYS & TEST
PROPERTIES	COMPRESSIVE STRENGTH, SLUMP, WEIGHT, YIELD, AIR CONTENT & WATER/CEMENT RATIO

APPROVED CONCRETE MIXTURE DESIGNS SHALL NOT BE CHANGED EXCEPT :
1. AFTER APPROVAL OF REDESIGNED CONCRETE MIXTURES TO INCORPORATE OTHER MATERIALS OR PROPORTIONS.
2. TO CORRECT EQUIVALENT BATCH WEIGHTS FOR FREE-MOISTURE CONTENT OF AGGREGATES SINCE DESIGN OF AGGREGATES IS BASED ON SATURATED, SURFACE DRY CONDITIONS.

CONCRETE EVALUATION — 3A 9

EVALUATE TEST RESULTS SEPARATELY FOR EACH CONCRETE MIXTURE.
VERIFY THAT TESTS HAVE BEEN CONDUCTED IN ACCORDANCE WITH SPECIFIED PROCEDURES.

TYPE OF SPECIMEN	MINIMUM COMPRESSIVE STRENGTH REQUIRED FOR ACCEPTANCE: INDIVIDUAL STRENGTH TEST (2)	AVERAGE OF STRENGTH TEST (2)
FIELD CAST LAB CURED CYLINDERS (1)	f'c – 0.5 ksi	f'c (AVERAGE OF ALL SETS OF 3 CONSECUTIVE)
CORES	0.75 f'c	0.85 f'c (AVERAGE OF THREE CORES)

f'c = SPECIFIED 28 DAY COMPRESSIVE STRENGTH (ksi)
(1) EACH SPECIFIED CONCRETE MIXTURE REPRESENTED BY AT LEAST 3 TEST SETS.
(2) STRENGTH TEST IS AVERAGE OF 2 OR MORE CYLINDERS.

VERIFY REQUIRED CURING, PROTECTION, FORM REMOVAL & TIME WHEN STRUCTURE OR ELEMENT MAY BE PLACE IN SERVICE USING FIELD CAST, FIELD CURED STANDARD CYLINDERS.

CONCRETE FORMED SURFACE FINISHES — 3A 15

FORMED ELEMENT (1)	AS CAST: TYPE OF FINISH	AS CAST: FACING MATERIAL	AFTER REMOVAL OF FORMS: REMOVE	AFTER REMOVAL OF FORMS: REPAIR SURFACE DEFECTS	SURFACE TREATMENT	REMARKS
SURFACE EXPOSED TO EARTH AFTER COMPLETION OF STRUCTURE TO 1'-0" BELOW FINISH GRADE	ROUGH FORM	OPTIONAL	FINS OVER 1/4" BY CHIPPING OR RUBBING (3)	PATCH TIE HOLES, REPAIR HOLES, HONEYCOMB, BROKEN CORNERS, EDGES & OTHER DEFECTS SEE 3A 16	NONE REQUIRED	SURFACE SHALL BE LEFT WITH TEXTURE IMPARTED BY FORM
EXTERIOR SURFACES EXPOSED AFTER COMPLETION OF STRUCTURE TO 1'-0" BELOW FINISH GRADE	SMOOTH FORM (SMOOTH, HARD, UNIFORM TEXTURE)	PLYWOOD, FORM GRADE TEMPERED HARDBOARD, PLASTIC OR OTHER APPROVED MATERIAL (2)	FINS, ROUGH SPOTS & HARDENED MORTAR COMPLETELY REMOVED BY RUBBING (3)		GROUT SURFACE FINISH	TYP. UNLESS OTHERWISE NOTED, SEE 3A 30
INTERIOR SURFACES EXPOSED AFTER COMPLETION OF STRUCTURE					RUBBED SURFACE FINISH	AS SHOWN OR NOTED, SEE 3A 24
					APPLIED SURFACE FINISH	AS SHOWN OR NOTED, SEE 3A 76
ALL OTHER FORMED SURFACES	(5)	(5)	(5)		REMOVE STAINS (4)	SURFACE SHALL BE LEFT WITH TEXTURE IMPARTED BY FORMS

(1) RELATED UNFORMED SURFACES SUCH AS TOPS OF WALLS, HORIZONTAL OFFSETS & SIMILAR UNFORMED SURFACES SHALL BE STRUCK SMOOTH & FLOATED TO A TEXTURE REASONABLY CONSISTENT WITH FORMED SURFACE. FINAL TREATMENT ON FORMED SURFACES SHALL CONTINUE ACROSS UNFORMED SURFACES.
(2) MATERIAL WITH RAISED GRAIN, TORN SURFACES, WORN EDGES, PATCHES, DENTS OR OTHER DEFECTS THAT WILL IMPAIR THE CONCRETE SURFACE TEXTURE SHALL NOT BE USED.
(3) RUB, USING ABRASIVE STONE OR HONE.
(4) REMOVE STAINS CAUSED BY EXCESSIVE USE OF FORM COATING MATERIAL BY RUBBING WETTED SURFACES WITH 5% – 10% SOLUTION OF MURIATIC ACID USING BRISTLE BRUSHES. RINSE LIBERALLY WITH WATER.
(5) SAME REQUIREMENTS AS FOR INTERIOR SURFACES EXPOSED AFTER COMPLETION OF STRUCTURE.

CONCRETE CURING — 3A 20

MAINTAIN CONCRETE WITH A MINIMAL MOISTURE LOSS AT A RELATIVELY CONSTANT TEMPERATURE FOR THE CURING PERIOD NECESSARY FOR HYDRATION OF CEMENT & HARDENING OF CONCRETE. BEGIN CURING IMMEDIATELY AFTER PLACEMENT & FINISHING, AS FOLLOWS :
SURFACES WHERE COATINGS, MEMBRANES OR TOPPINGS ARE TO BE APPLIED SHALL BE WET CURED.

TYPE OF CONCRETE	TYPE OF SURFACE	CURING METHOD: INITIAL	CURING METHOD: FINAL	CURING PERIOD
MASS CONCRETE (1)	FORMED	FORMS	LMFC (3)	14 DAYS
	UNFORMED	LMFC (3)	———	
ALL OTHER CONCRETE (2)	FORMED	FORMS	LMFC (3)	7 DAYS
	UNFORMED	LMFC (3)	———	

(1) KEEP FORMS & UNFORMED SURFACES CONTINUOUSLY WET FOR 48 HOURS & WHEN TEMPERATURE IS ABOVE 90° F.
(2) KEEP FORMS WET WHEN HEATED BY THE SUN.
(3) LMFC – LIQUID MEMBRANE FORMING COMPOUND; WHEN AIR TEMPERATURE EXCEEDS 85° F, DAMP CURE WITH ABSORPTIVE MATS KEPT CONTINUOUSLY WET, AFTER LMFC HAS DRIED.

FORMWORK & SHORING REMOVAL — 3A 21

DO NOT DISTURB FORMWORK UNTIL CONCRETE HAS HARDENED ADEQUATELY.
DETERMINE POSSIBLE START OF FORMWORK DISTURBANCE OR REMOVAL ON THE BASIS OF MINIMUM STRENGTH AS FOLLOWS:

ELEMENT		MINIMUM TIME (1)	MINIMUM STRENGTH (2)
WALLS, COLUMNS, SIDES OF BEAMS		12–24 HRS.	NO MINIMUM
BEAM OR JOIST SOFFITS		7 DAYS	60% SPECIFIED COMPRESSIVE STRENGTH
SLABS	UNDER 10 FEET CLEAR SPAN	4 DAYS	
	10 FT.(+)TO 20 FT.	5 DAYS	
	OVER 20 FEET	7 DAYS	

(1) MINIMUM TIME IS CUMULATIVE PERIOD NOT NECESSARILY CONSECUTIVE, DURING WHICH CONCRETE IS CURING WITH TEMPERATURE OF AIR IN CONTACT ABOVE 50° F.
(2) DO NOT REMOVE SHORES (OR RESHORES) UNTIL SUPPORTED ELEMENT HAS ATTAINED THE SPECIFIED COMPRESSIVE STRENGTH.

MANUFACTURER'S RECOMMENDATIONS — 3A 29

SUBMIT MANUFACTURER'S WRITTEN RECOMMENDATIONS, DIRECTIONS OR INSTRUCTIONS FOR COMPLETE INSTALLATION OR USAGE OF THE PRODUCT SPECIFIED OR EQUAL.
INCLUDE METHODS OF PREPARATION, SURFACE TREATMENT, MIXING, RATE OF APPLICATION, PLACING, TYING, CURING & OTHER APPLICABLE REQUIREMENTS TO ACHIEVE SATISFACTORY RESULTS.

REQUIRED CONCRETE MIXTURES — 3A 5

STRUCTURAL ELEMENT	CONCRETE MIXTURE MARK	MIN. 28 DAY COMPRESSIVE STRENGTH (K.S.I.)	CEMENT ASTM C150 (1): TYPE	MIN. CONTENT: LBS. CU.YDS.	MIN. CONTENT: SACKS CU.YDS.	MAX. (2) LB.WATER LB.CEMENT (U.S.GAL./94 LB.SACK)	AGGREGATE MDOT 2012, SECT. 902 & (ASTM C33) (3): FINE	AGGREGATE: COARSE (CLASS 4S)	ADMIXTURES (4): AIR-ENTRAINING ASTM C260 AIR CONTENT	ADMIXTURES (4): CHEMICAL ASTM C494/C494M TYPE (6)	MAXIMUM SLUMP (IN.) (5)
MUDMAT & FILL FOR EXCESS EXCAVATION BELOW STRUCTURES	MUD MAT	2.0	I	376	4.0	—	2 N S (NATURAL SAND)	6 A (57)	NOT REQ'D.	NOT REQ'D.	NO LIMIT
BAFFLE BEAMS & COLUMNS	5.5 AIR 1.5 AGG.	5.5	I	611	6.5	0.41 (4.6)	2 N S (NATURAL SAND)	6 AAA (57)	5 % ± 1 %	TYPE A NORMALLY	4
MASS CONCRETE (LEAST DIMENSION GREATER THAN 30")	4.0 MASS 1.5 AGG.	4.0	II MOD. HEAT	470	5.0	0.45 (5.1)	2 N S (NATURAL SAND)	6 AAA (57)	5 % ± 1 %	TYPE D IN HOT WEATHER	2
ELEMENTS 8" OR LESS IN LEAST DIMENSION (FIBER REINFORCED)	4.0 AIR 0.75 AGG.	4.0	I	517	5.5	0.443 (5.0)	2 N S (NATURAL SAND)	26 A (7)	6 % ± 1 %	TYPE E IN COLD WEATHER SEE 3A 13	4
ALL OTHER CONCRETE	4.0 AIR 1.5 AGG.	4.0	I	517	5.5	0.443 (5.0)	2 N S (NATURAL SAND)	6 AAA (57)	5 % ± 1 %		4

CONCRETE SHALL BE A MIXTURE OF CEMENT, FINE AGGREGATE, COARSE AGGREGATE, WATER & ADMIXTURES. USE MET

TYPICAL SLAB & WALL OPENINGS — 3A 31

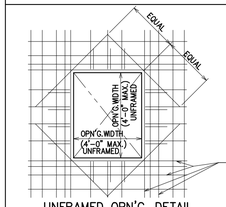

UNFRAMED OPN'G. DETAIL
PLAN – RECTANGULAR SLAB OPN'G.
ELEV. – RECTANGULAR WALL OPN'G.
NO SCALE

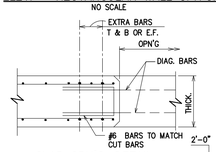

SLAB OPN'G. DETAIL
WALL JAMB PLAN
NO SCALE

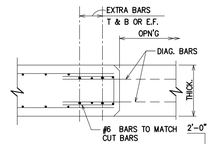

SLAB OPN'G. DETAIL
WALL JAMB PLAN
NO SCALE

DIAGONAL BARS
AT ALL OPENINGS

SLAB OR WALL THICKNESS		DIAG. BARS – (4)–SIDES OF OPENING; EQUAL SPACING	
FROM	TO AND INCLUDING	No.	BAR SIZE / LENGTH
0	8"	1	4 / 3'–0"
8" +	16"	2	5 / 4'–0"
16" +	24"	2	6 / 5'–0"
24" +	32"	3	6 / 5'–0"
32" +	40"	3	7 / 6'–0"

PROVIDE EXTRA BARS E.W., E.F. TO REPLACE BARS CUT BY OPN'G. (½ EA. SIDE), WHEN No. OF CUT BARS IS ODD No. INCREASE TO NEXT LARGEST EVEN No..

LENGTH OF EXTRA BARS
CENTERED ON CENTERLINE OF OPENING

BAR SIZE	LENGTH = OPN'G. PLUS	BAR SIZE	LENGTH = OPN'G. PLUS
4	+ 3'–0"	8	+ 8'–0"
5	+ 4'–0"	9	+ 10'–0"
6	+ 5'–0"	10	+ 12'–0"
7	+ 6'–0"	11	+ 14'–0"

OPN'G REINFORCEMENT SCHEDULE

TYPE OF OPENING	THICKNESS	REINFORCEMENT REQUIRED		
		EXTRA	DIAGONAL	[– BARS
UNFRAMED	16" OR LESS	YES	YES	NO
	MORE THAN 16"	YES	YES	YES
FRAMED (BEAMS)	ALL	NO	YES	NO

WALL OPENINGS REQUIRE ADDITIONAL HEAD & SILL BARS.
AT OPENINGS LESS THAN 8", SPREAD REINFORCEMENT TO CLEAR; NO DIAGONALS REQUIRED.

WALL OPN'G – HEAD & SILL BARS
CENTERED ON CENTERLINE OF OPENING

SMALLER OPENING DIMENSION		ADDITIONAL HEAD & SILL BARS PER 12" THICKNESS		
FROM	TO AND INCLUDING	No.	BAR SIZE	LENGTH
0'–8"	1'–0"	2	5	5'–0"
1'–0" +	2'–0"	2	6	6'–0"
2'–0" +	3'–0"	2	7	7'–6"
3'–0" +	4'–0"	2	8	10'–0"
4'–0" +	& OVER	AS DETAILED ON DRAWING		

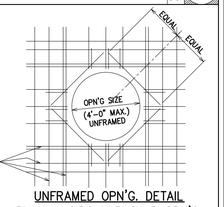

UNFRAMED OPN'G. DETAIL
PLAN – CIRCULAR SLAB OPN'G.
ELEV. – CIRCULAR WALL OPN'G.
NO SCALE

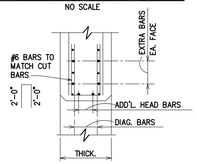

WALL – HEAD DETAIL
NO SCALE

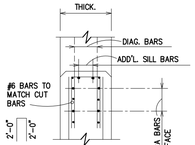

WALL – SILL DETAIL
NO SCALE

TENSION DEVELOPMENT AND LAP SPLICE LENGTHS FOR BARS (ACI SIMPLIFIED EQUATION) — 3A 32

COMPRESSION f'c = 3500			UNCOATED BARS				STANDARD HOOK
			TOP BARS		OTHER BARS		
	BAR SIZE	LAP CLASS	CASE 1	CASE 2	CASE 1	CASE 2	
9"	# 3	A	23	35	18	26	9"
		B	30	45	24	35	
11"	# 4	A	31	46	24	36	12"
		B	41	60	32	47	
14"	# 5	A	38	58	30	45	15"
		B	50	75	39	59	
17"	# 6	A	46	69	36	53	18"
		B	60	90	47	69	
20"	# 7	A	67	100	52	77	21"
		B	87	131	68	101	
22"	# 8	A	76	114	59	89	24"
		B	99	149	77	116	
25"	# 9	A	86	129	67	99	27"
		B	113	168	87	129	
28"	# 10	A	97	145	75	112	30"
		B	126	189	98	146	
31"	# 11	A	107	161	83	124	33"
		B	140	210	108	162	

1. EMBEDMENT & SPLICE LENGTHS TABULATED ARE BASED ON ACI 318 WITH f'c = 4.0 KSI & fy = 60.0 KSI UNCOATED FOR NORMAL WEIGHT CONCRETE. LENGTHS BASED ON f'c = 0.5 KSI ALLOWANCE.
2. TOP REINFORCEMENT IS HORIZONTAL REINFORCEMENT SO PLACED THAT MORE THAN 12" OF CONCRETE IS CAST IN THE MEMBER BELOW THE BAR. HORIZONTAL WALL REINFORCEMENT IS OTHER REINFORCEMENT UNLESS OTHERWISE NOTED.
3. ALL LAP SPLICES SHALL BE MADE WITH REINFORCEMENT IN CONTACT UNLESS OTHERWISE NOTED.
4. LAP SPLICES OF DIFFERENT SIZE BARS SHALL BE BASED ON THE SMALLER SIZE BAR UNLESS OTHERWISE NOTED.
5. LAP CLASS A: ≤ 50% BARS SPLICED AND AS PROV / AS REQ'D ≥ 2
   B: OTHER THAN CLASS A

TENSION DEVELOPMENT AND LAP SPLICE LENGTHS FOR BARS IN WALLS, SLABS AND FOOTINGS (ACI GENERAL DEVELOPMENT LENGTH EQUATION) — 3A 33

COMPRESSION f'c = 3500			CONC COVER = 1.0"		CONC COVER = 2.0"		CONC COVER = 3.0"	
			UNCOATED		UNCOATED		UNCOATED	
	BAR SIZE	LAP CLASS	TOP	OTHER	TOP	OTHER	TOP	OTHER
12"	# 3	A	14	14	14	14	14	14
		B	19	19	19	19	19	19
15"	# 4	A	18	15	18	15	18	15
		B	24	20	24	20	24	20
19"	# 5	A	28	22	23	18	23	18
		B	37	29	30	24	30	24
23"	# 6	A	38	29	28	22	28	22
		B	50	38	37	29	37	29
27"	# 7	A	61	47	40	31	40	31
		B	80	62	52	41	52	41
30"	# 8	A	76	59	46	36	46	36
		B	99	77	60	47	60	47
34"	# 9	A	93	71	58	44	52	40
		B	121	93	76	58	68	52
38"	# 10	A	113	87	70	54	59	45
		B	147	114	91	71	77	59
43"	# 11	A	133	102	84	64	64	49
		B	173	133	110	84	84	64

REINFORCEMENT NOTES — 3A 34

SURFACE CONDITION AT TIME OF CONCRETE PLACEMENT	REINFORCEMENT, AT THE TIME CONCRETE IS PLACED, SHALL BE FREE FROM LOOSE RUST, MUD, OIL, OR OTHER NON-METALLIC COATINGS THAT MAY ADVERSELY AFFECT BONDING CAPACITY. REINFORCEMENT WITH RUST, MILLSCALE OR A COMBINATION OF BOTH SHALL BE CONSIDERED SATISFACTORY, PROVIDED THE DIMENSIONS, INCLUDING DEFORMATIONS & WEIGHT OF A HAND WIRE BRUSHED SAMPLE ARE NOT LESS THAN REQUIRED BY ASTM A615/A615M.
SPLICES	REINFORCEMENT SPLICES SHALL BE CONTACT LAP SPLICES OF LENGTHS SHOWN ON THIS DRAWING. ADJACENT SPLICES SHALL BE STAGGERED AT LEAST ONE LAP SPLICE LENGTH. HEX NUT SPLICES & MECHANICAL BUTT SPLICES AS DETAILED ON THIS DRAWING ARE OPTIONAL SUBJECT TO APPROVAL.
HORIZONTAL REINFORCEMENT	HORIZONTAL REINFORCEMENT SHALL BE EXTENDED THRU BUILT-IN OR SUPPRESSED COLUMNS & PIERS. HORIZONTAL REINFORCEMENT AT CORNERS & INTERSECTIONS SHALL BE DEVELOPED AS DETAILED ON THE DRAWINGS.
VERTICAL REINFORCEMENT	VERTICAL INSIDE FACE REINFORCEMENT IN WALLS SHALL BE EXTENDED TO WITHIN 2" OF TOP OF SLAB.

REINFORCEMENT MATERIAL — 3A 35

REINFORCEMENT	ASTM	REMARKS	
SMOOTH WELDED WIRE FABRIC	A185	WIRE A 82–85	SUBMIT CERTIFIED COPY OF MILL TEST REPORT SHOWING PHYSICAL & CHEMICAL ANALYSIS ON EACH HEAT OF REINFOR–CEMENT DELIVERED
ALL OTHER REINFORCEMENT	A615/ A615M GRADE 60	INCLUDING SUPPLEMENTARY REQUIREMENTS S1	

REINFORCEMENT TIE WIRE SHALL BE BLACK, ANNEALED WIRE, 16 GAGE OR HEAVIER. COATED AT COATED REINFORCEMENT.

REINFORCEMENT APPROVALS — 3A 36

ITEM	INFORMATION REQUIRED
BAR SUPPORTS	PROPOSED TYPE OF SUPPORT
HEX NUT SPLICES & LAP SPLICES	PROPOSED LOCATIONS
MECHANICAL BUTT SPLICES	PROPOSED LOCATIONS
REINFORCEMENT RELOCATION	DIMENSIONS IN EXCESS OF TOLERANCE SHOWN ON THIS DRAWING

REINFORCEMENT PROTECTION CONCRETE COVER — 3A 37

STRUCTURAL ELEMENT	CLEAR COVER	
	SURFACES EXPOSED TO BACKFILL, WEATHER OR SUBMERGED	SURFACES UNEXPOSED (INTERIORS OF BUILDINGS, DRY WELL, GALLERIES)
BASE SLAB & FOOTINGS	3" TOP	2" TOP
	3" BOTTOM ①	3" BOTTOM ①
ROOF, STAIR & FLOOR SLABS	2" TOP	1" TOP
	2" BOTTOM	1" BOTTOM
BEAMS SIDES, TOP & BOTTOM)	2" TO TIES	1½" TO TIES
	2½" TO MAIN	2" TO MAIN
COLUMNS & PIERS	2" TO TIES	1½" TO TIES
	2½" TO VERTICAL	2" TO VERTICAL
WALLS	2"	1"
ALL OTHER CONCRETE	2"	1"

① REDUCE TO 2" WHEN PLACED ON MUDMAT.

TERMINATE REINFORCEMENT AT EXPANSION JOINTS WITH MINIMUM CLEAR COVER OF 2" AT END OF BAR.

BEAMS, COLUMNS	CASE 1	CONCRETE COVER LESS THAN 1.0 d_b AND C.–C. SPACING AT LEAST 2.0 d_b
	CASE 2	CONCRETE COVER AT LEAST 1.0 d_b OR C.–C. SPACING AT LEAST 2.0 d_b
ALL OTHERS	CASE 1	CONCRETE COVER AT LEAST 1.0 d_b AND C.–C. SPACING AT LEAST 3.0 d_b
	CASE 2	CONCRETE COVER AT LEAST 1.0 d_b OR C.–C. SPACING AT LEAST 3.0 d_b

REINFORCEMENT SHOP DRAWINGS — 3A 38

SUBMIT REINFORCEMENT SHOP DRAWINGS (PLACING DRAWINGS) FOR APPROVAL. OBTAIN APPROVAL PRIOR TO FABRICATING.

USE APPROVED REINFORCEMENT SHOP DRAWINGS IN CONJUNCTION WITH THE CONTRACT DRAWINGS.

DETAILS OF REINFORCEMENT NOT COVERED ON THIS DRAWING SHALL BE IN ACCORDANCE WITH CRSI MANUAL OF STANDARD PRACTICE.

REINFORCEMENT FABRICATOR SHALL BE A MDOT APPROVED SUPPLIER.

SHOP DRAWINGS SHALL SHOW :

FABRICATION DIMENSIONS & BAR LISTS, LOCATIONS FOR PLACEMENT OF REINFORCEMENT, INCLUDING ACCESSORIES, REINFORCEMENT SPECIFICATIONS & GRADE.

SUBMIT NUMBER & TYPE OF SHOP DRAWING AS INDICATED IN THE GENERAL CONDITIONS OF THE CONTRACT SPECIFICATIONS.

REINFORCEMENT ABBREVIATIONS — 3A 40

#	SIZE OF DEFORMED BAR	H.O.F.	HORIZONTAL OUTSIDE FACE
@	AT	I.F.	INSIDE FACE
ALT.	ALTERNATE	LG.	LONG
BOTT.	BOTTOM	O.F.	OUTSIDE FACE
CL.	CLEAR	SPA.	SPACE
CONT.	CONTINUOUS	REINF.	REINFORCEMENT
DIAG.	DIAGONAL	REM.	REMAINDER
DISC.	DISCONTINUOUS	TEMP.	TEMPERATURE
DWL.	DOWEL	T & B	TOP & BOTTOM
E.F.	EACH FACE	VERT.	VERTICAL
E.W.	EACH WAY	V.E.F.	VERTICAL EACH FACE
HORIZ.	HORIZONTAL	V.I.F.	VERTICAL INSIDE FACE
H.E.F.	HORIZONTAL EACH FACE	V.O.F.	VERTICAL OUTSIDE FACE
H.I.F.	HORIZONTAL INSIDE FACE	W.W.F.	WELDED WIRE FABRIC

REINFORCEMENT SYMBOLS — 3A 41

SYMBOL	
	DEFORMED BAR REINFORCEMENT
	WELDED WIRE FABRIC REINFORCEMENT
	CONTACT LAP SPLICE; NOT A BAR BEND
	BAR BEND
	BAR BROKEN IN SECTION
	BAR BEND INTO PLANE OF DRAWING
	BAR BEND OUT OF PLANE OF DRAWING
	DIRECTION OF SPAN OR MAIN BARS
	EXTENT OF SPAN OF BARS

TYPICAL STANDEE — 3A 42

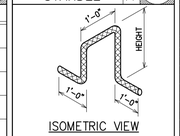

ISOMETRIC VIEW

HEIGHT EQUALS DISTANCE BETWEEN REINFORCEMENT LAYERS. SPACE STANDEES AT 4'–0" O.C. EACH WAY.

STANDEE BAR SIZE	HEIGHT	
	FROM	TO
4	6"	1'–6" (–)
5	1'–6"	3'–6"

REINFORCEMENT BENDS & STANDARD 90° HOOKS — 3A 43

BAR SIZE	A (ft.–in.)	D (in.)	Ro (in.)
3	0'–7"	2¼"	1⅝"
4	0'–9"	3"	2⅛"
5	0'–11"	3¾"	2⅝"
6	1'–1"	4½"	3⅛"
7	1'–3"	5¼"	3⅝"
8	1'–5"	6"	4⅛"
9	1'–8"	9½"	6"
10	1'–11"	10¾"	6 13/16"
11	2'–1"	12"	7⅝"

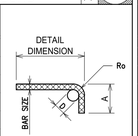

STANDARD BEND & 90° HOOK DETAIL
NO SCALE

REINFORCEMENT BENDS & STANDARD 180° HOOKS — 3A 44

BAR SIZE	A (ft.–in.)	D (in.)	Ro (in.)
3	0'–8"	2¼"	1⅝"
4	0'–9"	3"	2⅛"
5	0'–11"	3¾"	2⅝"
6	1'–1"	4½"	3⅛"
7	1'–3"	5¼"	3⅝"
8	1'–5"	6"	4⅛"
9	2'–0"	9½"	6"
10	2'–3"	10¾"	6 13/16"
11	2'–6"	12"	7⅝"

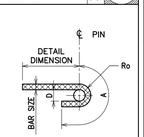

STANDARD BEND & 180° HOOK DETAIL
NO SCALE

STANDARD TIE HOOKS — 3A 45

BAR SIZE	A (in.)	B (in.)	D (in.)
3	4⅜"	5¾ "	1½"
4	4½"	6¾ "	2"
5	6"	8½"	2½"

STAGGER TIE HOOKS, LOCATIONS IN BEAMS & COLUMNS

PROVIDE (2) – #5 TOP TIE SUPPORT BARS IN BEAMS AS REQUIRED

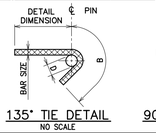

135° TIE DETAIL
NO SCALE

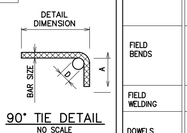

90° TIE DETAIL
NO SCALE

REINFORCEMENT PLACING — 3A 46

DEFECTIVE BARS	REINFORCEMENT WITH KINKS OR IMPROPER BENDS SHALL NOT BE USED.
POSITIONING	REINFORCEMENT SHALL BE ACCURATELY PLACED IN ACCORDANCE WITH APPROVED SHOP DRAWINGS WITHIN THE TOLERANCES SHOWN ON THIS DRAWING. WIRE TIE BARS AT INTERSECTIONS AT 18" MAXIMUM IN ANY DIRECTION.
FIELD BENDS	FIELD BEND BARS COLD. DO NOT FIELD BEND BARS WITH HEAT. DO NOT FIELD BEND BARS PARTIALLY EMBEDDED IN CONCRETE.
FIELD WELDING	DO NOT FIELD WELD REINFORCEMENT, INCLUDING TACK WELDING.
DOWELS	DOWELS SHALL BE IN POSITION & TIED PRIOR TO PLACING CONCRETE. USE TEMPLATE TO SET COLUMN DOWELS.
LOCATION	UNLESS OTHERWISE NOTED, PLACE MAIN BOTTOM & TOP REINFORCEMENT IN LOWER BOTTOM LAYER & UPPER TOP LAYER.

REINFORCEMENT PROTECTION EPOXY COATING — 3A 47

STEEL REINFORCEMENT DESIGNATED AS EPOXY COATED SHALL CONFORM TO MDOT "2012 STANDARD SPECIFICATION FOR CONSTRUCTION".

SECTION 905.03.C EPOXY COATING

SECTION 905.03.D BAR CHAIRS & WIRE TIES FOR EPOXY COATED STEEL REINFORCEMENT.

REINFORCEMENT FABRICATING — 3A 48

SHOP BENDS	REINFORCEMENT SHALL NOT BE FIELD BENT, EXCEPT AS SHOWN IN THE CONTRACT DOCUMENTS OR PERMITTED BY THE ENGINEER. REINFORCEMENT FABRICATOR SHALL BE A MDOT APPROVED SUPPLIER. BEND BARS ACCURATELY TO THE DIMENSIONS SHOWN ON THE APPROVED SHOP DRAWINGS WITHIN TOLERANCES SHOWN ON THIS DRAWING. BEND BARS COLD. DO NOT BEND BARS WITH HEAT. STRAIGHTEN BARS IN A MANNER, THAT WILL NOT INJURE THE MATERIAL.
SHOP WELDING	DO NOT SHOP WELD REINFORCEMENT.
TEMPLATES	PROVIDE TEMPLATES FOR SETTING COLUMN DOWELS.
SHIPPING	REINFORCEMENT SHALL BE BUNDLED, TAGGED & SHIPPED TO THE SITE IN ACCORDANCE WITH CRSI STANDARDS.
STORAGE ON SITE	REINFORCEMENT SHALL BE STORED OFF THE GROUND ON SKIDS, PLATFORMS OR OTHER SUPPORTS, & SHALL BE PROTECTED FROM THE WEATHER BY SUITABLE COVERING.

TYPICAL EQUIPMENT PAD DETAILS — 3A 49

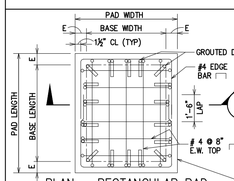

PLAN – RECTANGULAR PAD

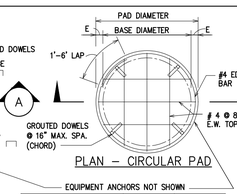

PLAN – CIRCULAR PAD

SEE PROCESS, MECHANICAL AND ELECTRICAL DRAWINGS FOR SIZE, SPECIAL DETAILS AND LOCATIONS OF EQUIPMENT PADS.

EQUIPMENT ANCHORS NOT SHOWN

TYPE OF EQUIPMENT	EDGE DIM. E	GROUT DIM. G
ELECTRICAL EQUIP. W/O LEVELING CHANNELS	½"	NO GROUT
ELECTRICAL EQUIP. W/LEVELING CHANNELS	6" TYP., SEE ELECT. DRAWINGS	NO GROUT
OTHER EQUIPMENT UNLESS NOTED	2½"	1" MIN.

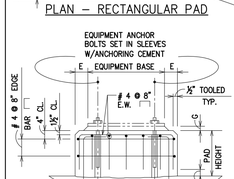

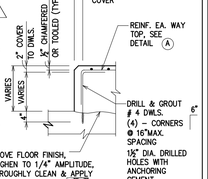

VERIFY ITEMS W/APPROVED SHOP DWGS. AS FOLLOWS :
- EQUIPMENT WIDTH, LENGTH & HEIGHT.
- EQUIPMENT BASE LOCATION.
- No. & SIZE OF EQUIPMENT ANCHORS.
- SPECIAL ANCHORAGE REQUIREMENTS OF EQUIPMENT MANUFACTURER. GROUT SHALL BE NONSHRINK TYPE.

CONCRETE CURB DETAILS — 3A 50

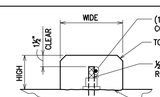

CURBS LESS THAN 8" WIDE

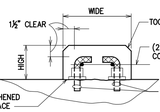

CURBS 8" WIDE OR WIDER

SEE PLANS FOR "WIDE" x "HIGH", OMIT SQUARE CORNERS WHERE MASONRY WALL IS SUPPORTED ON CURB.

PROVIDE (1) – #4 CORNER BAR WITH 1'–6" LEGS AT CURB CORNERS & CURB INTERSECTIONS.

RELOCATE THREADED ROD ANCHOR AS REQUIRED TO CLEAR TOP REINFORCEMENT.

EMBEDDED ELECTRICAL CONDUITS — 3A 51

NOMINAL SIZE OF CONDUIT	DIAMETER INSIDE (IN.)	DIAMETER OUTSIDE (IN.)	MINIMUM THICKNESS OF SLAB, WALL OR BEAM (IN.)	MINIMUM SPACING CLEAR (IN.)	MINIMUM SPACING CENTER TO CENTER (IN.)
½	.622	.840	4"	1¾"	2⅜"
¾	.824	1.050	4"	2⅛"	3⅛"
1	1.049	1.315	4½"	2⅜"	4"
1¼	1.380	1.660	5"	3⅛"	5"
1½	1.610	1.900	5⅜"	3⅛"	5⅜"
2	2.067	2.375	7⅛"	4¾"	7⅛"
2½	2.469	2.875	8⅝"	5¾"	8⅝"
3	3.068	3.500	10½"	7"	10½"
3½	3.548	4.00	12"	8"	12"
4	4.026	4.50	13½"	9"	13½"
5	5.047	5.563	16¾"	11⅛"	16¾"
6	6.065	6.625	19⅞"	13¼"	19⅞"

ADJACENT CONDUITS OF DIFFERENT SIZES SHALL BE SPACED AT THE AVERAGE SPACING REQUIRED FOR THE TWO SIZES.

CROSSING CONDUITS SHALL BE PLACED IN CONTACT. MINIMUM THICKNESS OF SLAB, WALL OR BEAM SHALL BE BASED ON THE SUM OF THE OUTSIDE DIAMETERS OF THE CONDUITS.

MINIMUM CONCRETE PROTECTION FOR CONDUIT SHALL BE 1½" CLEAR.

EMBEDDED CONDUIT SHALL BE LOCATED BETWEEN THE LAYERS OF REINFORCEMENT.

REINFORCEMENT TOLERANCES — 3A 52

OPERATION	ITEM	TOLERANCE PLUS (IN.)	TOLERANCE MINUS (IN.)
FABRICATING	SHEARED LENGTH	+ 1"	– 1"
	DEPTH OF TRUSS BARS	+ 0"	– ½"
	OVERALL DIMENSIONS OF STIRRUPS, TIES & SPIRALS	+ ½"	– ½"
	ALL OTHER BENDS	+ ½"	– ½"
PLACING	CLEAR DISTANCE TO FORMED SURFACES	+ ½"	– ½"
	MINIMUM SPACING OF BARS		– ¼"
	TOP BARS IN SLABS & BEAMS: DEPTH 4" OR LESS	+ ¼"	– ¼"
	TOP BARS IN SLABS & BEAMS: DEPTH OVER 4" THRU 12"	+ ⅜"	+ ⅜"
	TOP BARS IN SLABS & BEAMS: DEPTH MORE THAN 12"	+ ½"	– ½"
	LENGTHWISE OF MEMBERS	+ 2"	– 2"
	CROSSWISE OF MEMBERS	EVENLY SPA. WITHIN 2"	
	STIRRUPS	LESSER OF ±.3" OR ±1" PER FT. OF BEAM DEPTH	
	TIES	LESSER OF ±.3" OR ±1" PER FT. OF COL DEPTH	

REINFORCEMENT MAY BE MOVED AS REQUIRED TO CLEAR OTHER REINFORCEMENT, CONDUITS OR EMBEDDED ITEMS. IF REINFORCEMENT IS MOVED MORE THAN ONE BAR DIAMETER OR IN EXCESS OF TOLERANCES ABOVE, THE RESULTING ARRANGEMENT SHALL BE SUBJECT TO APPROVAL.

WELDING REINFORCEMENT — 3A 59

WELDING OF REINFORCEMENT IS NOT PERMITTED UNLESS SPECIFICALLY SPECIFIED OR DETAILED ON THE DRAWINGS.

WELDING OF REINFORCEMENT SHALL CONFORM TO A.W.S. D1.4–04, STRUCTURAL WELDING CODE – REINFORCING STEEL.

DO NOT WELD AT BAR END.

REINFORCEMENT SPACING — 3A 53

BAR SIZE	NOMINAL DIAMETER (IN.)	APPROX. OVERALL DIA. TO DEFORM. (IN.)	MINIMUM HORIZONTAL SPACING 1½" AGGREGATE CLEAR (IN.)	1½" AGGREGATE C. TO C. (IN.)	¾" AGGREGATE CLEAR (IN.)	¾" AGGREGATE C. TO C. (IN.)
3	.375	⅞"	2"	2½"	1"	1⅜"
4	.50	1⅛"	2"	2⅝"	1"	1⅝"
5	.625	1⅜"	2"	2¾"	1"	1¾"
6	.75	⅝"	2"	2⅛"	1"	1⅜"
7	.875	1"	2"	3"	1"	2"
8	1.0	1⅛"	2"	3⅜"	1⅛"	2¼"
9	1.128	1¼"	2"	3¼"	1¼"	2½"
10	1.27	1⅜"	2"	3½"	1½"	3"
11	1.41	1⅝"	2"	3⅝"	1⅝"	3¼"
14	1.693	1⅞"	2"	3¾"	1⅞"	3¾"
18	2.257	2½"	2½"	5"	2½"	5"

CENTER TO CENTER SPACING SHOWN HAVE BEEN ROUNDED TO THE NEXT ⅛".

BARS SHOWN TO BE PLACED IN LAYERS SHALL BE PLACED IN THE SAME VERTICAL PLANE WITH 1" CLEAR BETWEEN LAYERS.

BUNDLED BARS SHALL NOT BE USED UNLESS SPECIFICALLY NOTED.

CLEAR SPACING BETWEEN BARS SHOWN ABOVE SHALL ALSO APPLY TO CLEAR SPACING BETWEEN CONTACT LAP SPLICE & ADJACENT SPLICES OR BARS.

THE FIRST & LAST BAR SPACE OF SLABS, WALLS, BEAM TIES & COLUMN TIES SHALL BE A HALF SPACE UNLESS OTHERWISE NOTED.

REINFORCEMENT SUPPORTS — 3A 54

CONCRETE ELEMENT	LOCATION OF REINF. SUPPORTED	BAR SUPPORTS CLASS	BAR SUPPORTS TYPE
SLABS PLACED ON GROUND OR MUDMAT	TOP	——	CONTRACTOR OPTION
	BOTTOM	——	PRECAST CONC. BLOCK, STYLE (2)–W/WIRES
CONC. SURFACES EXPOSED TO VIEW IN FINISHED STRUCTURE	ALL 1	PLASTIC PROTECTED	CONTRACTOR OPTION
SLABS WITH MORE THAN 6" BTWN LAYERS	TOP	SPECIAL – STANDEE	SEE 3A 42
ALL OTHER CONCRETE	3	BRIGHT BASIC	CONTRACTOR OPTION

REINFORCEMENT SHALL BE SUPPORTED & FASTENED TOGETHER TO PREVENT DISPLACEMENT BY CONSTRUCTION LOADS OR CONCRETE PLACEMENT BEYOND THE TOLERANCES SHOWN ON THIS DRAWING.

BAR SUPPORTS SHALL CONFORM TO CRSI "MANUAL OF STANDARD PRACTICE", LATEST EDITION.

PRINCIPAL REINFORCEMENT SHALL NOT BE RELOCATED TO SUPPORT BAR MATS. PROVIDE ADDITIONAL MAT SUPPORT BARS AS REQUIRED.

W.W.F. MAY BE PLACED AFTER CONCRETE BELOW THE SPECIFIED REINFORCEMENT LEVEL HAS BEEN PLACED.

PROVIDE NON–RUSTING SIDE FORM SPACERS & BAR SPACERS (REFER TO "CONSTRUCTION JOINTS") TO MAINTAIN SPECIFIED COVER & POSITION OF REINFORCEMENT IN VERTICAL STRUCTURAL ELEMENTS.

POSITION 2 – #4 CONTINUOUS TIE SPACER BARS IN TOP OF BEAMS.

MECHANICAL BUTT SPLICERS (COUPLERS) — 3A 55

COUPLERS MAY BE USED IN LIEU OF CONTACT LAP SPLICES PROVIDED THAT :



1. COUPLERS CONSIST OF SPLICE SLEEVE & FILLER METAL OR STEEL SLEEVE FORGED OR SWAGED IN PLACE.
2. SPLICE DEVELOPS A MINIMUM OF 125% YIELD STRENGTH OF REINFORCEMENT.
3. SPLICE HAS NO ADVERSE AFFECT ON REINFORCEMENT.
4. SPLICE MATERIAL, INSTALLATION METHOD & INSPECTION PROCEDURES ARE SUBMITTED FOR APPROVAL.

THREADED ROD ANCHOR — 3A 56

ROD SIZE	A (IN.)	E (IN.)
⅜"	3

CONCRETE SLAB ON GROUND — 3A 61

CONCRETE SLAB ON GROUND SCHEDULE

REF. DWG.	MARK	THICK.	REINFORCEMENT	REMARKS
S-9	GS-1	6"	#4 @ 12" EW	REINF @ MID DEPTH

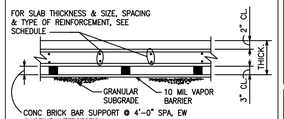

TYPICAL SLAB DETAIL

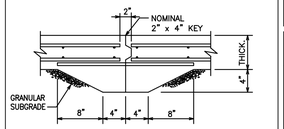

Ⓐ TYPICAL
CONSTRUCTION JOINT DETAIL

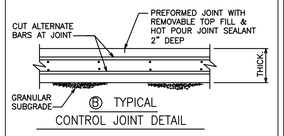

Ⓑ TYPICAL
CONTROL JOINT DETAIL

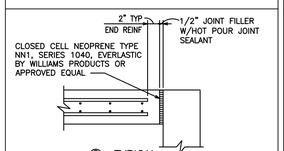

Ⓒ TYPICAL
ISOLATION JOINT DETAIL

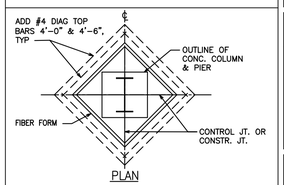

PLAN

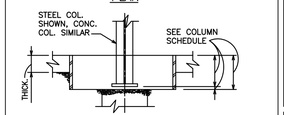

SECTION
TYPICAL ISOLATION JOINT
@ INTERIOR COLUMN

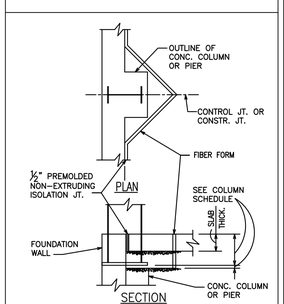

SECTION
TYPICAL ISOLATION JOINT
@ EXTERIOR COLUMN

ANCHORING CEMENT — 3A 62

ANCHORING CEMENT SHALL BE A NON-METALLIC, NON-SHRINK, NON-GYPSUM, QUICK SETTING HYDRAULIC CEMENT COMPOUND WHICH WILL NOT ERODE WHEN EXPOSED TO WATER.

ANCHORING CEMENT SHALL BE USED FOR SETTING ANCHOR BOLTS, RAILING POSTS, REINFORCEMENT & OTHER FIXTURES IN HARDENED CONCRETE.

ANCHORING CEMENT SHALL BE MIXED & PLACED IN ACCORDANCE WITH THE MANUFACTURER'S WRITTEN RECOMMENDATIONS.

	MANUFACTURER OR EQUAL		
ANCHORING CEMENT MATERIAL	EUCLID CHEMICAL COMPANY	PIONEERING CEMENT TECHNOLOGIES	MASTER BUILDERS INC.
	"SPEED PLUG"	"SUPER POR-ROK"	"THOROGRIP"

CEMENT MORTAR AND GROUT — 3A 68

CEMENT MORTAR & GROUT SHALL CONFORM TO THE MDOT "2012 STANDARD SPECIFICATIONS FOR CONSTRUCTION", SECTION 702 MORTAR & GROUT. THE TYPE FOR CEMENT MORTAR & GROUT SHALL BE AS INDICATED ON THE DRAWINGS.

ADHESIVE ANCHOR SYSTEM — 3A 69

ADHESIVE ANCHOR SYSTEM SHALL CONFORM TO THE MDOT "2012 STANDARD SPECIFICATIONS FOR CONSTRUCTION", ITEM 603.03B AND ITEM 712.03J.

CONTINUOUS CONCRETE INSERT — 3A 71

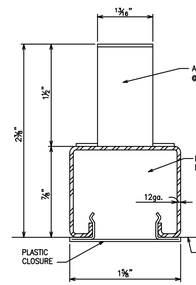

CONTINOUS CONCRETE INSERT

CONTINUOUS CONCRETE INSERTS SHALL BE "POWER STRUT", "SUPER STRUT" OR "UNISTRUT".

WATERTIGHT CONCRETE — 3A 75

THE CONTRACTOR SHALL CONDUCT HIS OPERATIONS IN SUCH A MANNER, & USE NECESSARY MATERIALS OR PROCESSES, AS TO INSURE WATERTIGHT CONCRETE. NO LEAKAGE WILL BE ALLOWED THROUGH THE WALLS. WHERE NECESSARY TO USE CONSTRUCTION JOINTS, THE CONTRACTOR SHALL TAKE SUCH PRECAUTIONS, & USE SUCH WATER STOPS, ETC., AS REQUIRED TO ENSURE NO LEAKAGE THROUGH THE JOINTS.

CONCRETE PLACEMENT INTERVAL — 3A 78

PLACE CONCRETE AGAINST A PREVIOUS POUR ONLY AFTER A MINIMUM TIME PERIOD OF 60 HOURS HAS ELAPSED FROM THE COMPLETION OF THE PREVIOUS PLACEMENT.

EXPANSION JOINT — 3A 83

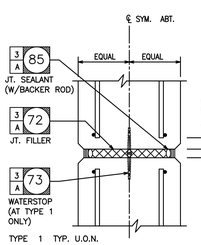

SECTION
TYPICAL EXPANSION JOINT

NEOPRENE EXPANSION JOINT SEAL — 3A 63

PROVIDE PREFORMED NEOPRENE JOINT SEALS IN EXPANSION JOINTS WHERE SHOWN ON PLANS

	ITEM	DESCRIPTIONS
NEOPRENE SEAL	CHEMICAL PROPERTIES	ELASTOMERIC COMPOUND USING POLYCHLOROPRENE AS ONLY BASE POLYMER.
	PHYSICAL PROPERTIES	CONFORM TO ASTM D3542
	SIZE	SIZED FOR SPECIFIC MOVEMENT PER MANUFACTURER'S MOVEMENT TABLE
	LENGTH	ONE CONTINUOUS PIECE SEALED AT EACH END.
	MANUFACTURER	D.S. BROWN "J-SERIES" PROFILE, WATSON BOWMAN ACME "W SERIES JEENE SEAL" SIZED FOR SPECIFIC MOVEMENT
	ADHESIVE	2 PART STRUCTURAL ADHESIVE CONFORMING TO MANUFACTURER'S SPECIFICATIONS
INSTALLATION		
	FORMING JOINTS	FROM VERTICAL SURFACES OF JOINT IN CONCRETE PLACEMENTS TO BE SEALED.
	CLEANING	REMOVE DELETERIOUS MATERIAL THAT MAY DAMAGE ADJACENT CONCRETE BY BLOCKING THE JOINT OR PRECLUDE LATER SATISFACTORY OPERATION OR CLEANING.
	PATCHING JOINTS	PATCH JOINTS IN ACCORDANCE WITH MDOT 2012 SPECS., SUB-SECTION 602.03
	SEALING JOINTS	SEAL JOINTS IN ACCORDANCE WITH MDOT 2012 SPECS., SUB-SECTION 602.03.

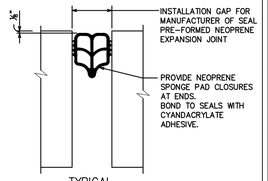

TYPICAL
NEOPRENE EXPANSION JOINT SEAL DETAIL

APPLIED SURFACE FINISH — 3A 76

PROVIDE APPLIED SURFACE FINISH TO CONCRETE SURFACES WHERE INDICATED ON THE DRAWINGS.

	MANUFACTURER OR EQUAL	
MATERIAL	MASTER BUILDERS INC.	DAYTON SUPERIOR CORPORATION
APPLIED SURFACE FINISH	"MASTERSEAL 581"	"SEAL COAT 1000"
BONDING ADDITIVE	"MASTEREMACO A 660C"	"ACRYLIC BONDING AGENT J40"
HYDRAULIC CEMENT COMPOUND	"MASTEREMACO N426"	"WATERSTOP"
COLOR	COLOR SHALL BE STANDARD GRAY	
PREPARATION	CLEAN SURFACE BY WIRE BRUSH, SCRAPING OR CHIPPING TO ELIMINATE ALL DEFECTIVE MATERIALS & FOREIGN MATTER. CHEMICALLY REMOVE ANY REMAINING EFFLORESCENCE, FORM OIL, MOLD, ETC. AT LEAST 70% OF ORIGINAL SURFACE MUST BE EXPOSED FOR A GOOD BOND. REPAIR ALL CRACKS & HOLES WITH A QUICK SETTING HYDRAULIC CEMENT COMPOUND THAT STOPS FLOWING WATER INSTANTLY. PUNCH WEEP HOLES AT BASE TO RELIEVE WATER PRESSURE. DAMPEN WALLS AN HOUR BEFORE APPLICATION & KEEP DAMP, ALLOWING MOISTURE TO SOAK IN. DENSE CONCRETE SHOULD BE WETTED AT LEAST TWICE, NOT LESS THAN 30 MINUTES APART. SURFACE MUST BE DAMP (NO FREE WATER) IMMEDIATELY AHEAD OF APPLICATION. IF THE APPLIED SURFACE FINISH STARTS TO PULL ON APPLICATION, THIS INDICATES SURFACE HAS NOT BEEN PROPERLY WETTED.	
MIXING	EMPTY 50 LB. BAG OF THE APPLIED SURFACE FINISH INTO CLEAN CONTAINER; ADD APPROXIMATELY 1.75 U.S. GAL. CLEAN WATER & MIX TO PANCAKE BATTER CONSISTENCY. ALLOW MIX TO FATTEN FOR 15 MINUTES; IT SHOULD THEN ADHERE TO THE BRUSH WITHOUT DRIPPING. FOR EXTRA BONDING STRENGTH ON SMOOTH DENSE CONCRETE OR PREVIOUSLY PAINTED SURFACES, MIX 1 PART LIQUID ACRYLIC POLYMER BONDING ADDITIVE, WITH 3 PARTS OF WATER & USE IN PLACE OF MIXING WATER.	
APPLICATION	STIFF BRUSH 2 COATS OF APPLIED SURFACE FINISH INTO DAMP WALL IN ACCORDANCE WITH MANUFACTURER'S RECOMMENDATIONS. FILL WEEP HOLES WITH HYDRAULIC CEMENT COMPOUND. PROVIDE SPONGE FINISH. DO NOT APPLY APPLIED SURFACE FINISH WHEN TEMPERATURE MAY DROP BELOW 45°F., OR WHEN WALL IS FROZEN.	
CURING	WHEN SURFACE BECOMES HARD ENOUGH, FOG SPRAY WITH CLEAN WATER; KEEP WALL DAMP FOR 3 DAYS. THE HOTTER THE WEATHER, THE MORE CRITICAL THE CURE.	

FIRST COAT	SECOND COAT
2 LBS. (BRUSH) PER S.Y.D.	1 LB. PER S.Y.D.

CONCRETE ABBREVIATIONS — 3A 64

AGG.	AGGREGATE
BM.	BEAM
BOTT.	BOTTOM
CANT.	CANTILEVER
C.I.P.	CAST IN PLACE
C.J.	CONSTRUCTION JOINT
COL.	COLUMN
CONC.	CONCRETE
CONT.	CONTINUOUS
D.	DEPTH
DISC.	DISCONTINUOUS
E.J.	EXPANSION JOINT
EL.	ELEVATION
FDN.	FOUNDATION
H.P.	HIGH POINT
J.F.	JOINT FILLER
J.S.	JOINT SEALANT
J.W.P.	JOINT WATERPROOFING
L.M.F.C.	LIQUID MEMBRANE FORMING COMPOUND
L.P.	LOW POINT
MAS.	MASONRY
M.W.P.	MEMBRANE WATERPROOFING
MET. W.P.	METALLIC WATERPROOFING
P.C.	PRECAST CONCRETE
P.P.	PROTECTIVE PLASTER
T.	THICKNESS
T.O.	TOP OF
W.	WIDTH
W.P.M.	WATERPROOF MEMBRANE
W.P.	WORK POINT
W.S.	WATERSTOP

JOINT FILLER — 3A 72

JOINT FILLER SHALL BE BLACK, CLOSED CELL NEOPRENE CONFORMING TO ASTM C509 & D1056, IN SIZES & THICKNESSES SHOWN ON THE DRAWINGS.

OTHER PROPERTIES AS FOLLOWS :

DENSITY (PCF)	12 TO 35	WATER ABSORPTION	5% MAX.
25% COMPRESSION DEFLECTION (PSI)	2 TO 5	FLAMMABILITY	SELF EXT.
COMPRESSION SET	15%	TEMPERATURE RESISTANCE	−40°F. TO +158°F.

MANUFACTURER	TYPE
WILLIAMS PRODUCTS CO.	"EVERLASTIC NEOPRENE TYPE NN−1"
OTHER	OR EQUAL

SUBMIT PROPOSED JOINT FILLER FOR APPROVAL

PAPER JOINT — 3A 77

PROVIDE PAPER JOINT AT JOINT LOCATIONS INDICATED ON THE DRAWINGS.

PROVIDE LAYER OF 40 POUND TAR BUILDING PAPER FIRMLY HELD IN PLACE.

BONDING AGENT (ADHESIVE) — 3A 79

USED FOR BONDING FRESH CONCRETE TO SOUND HARDENED CONCRETE	MANUFACTURER OR EQUAL		
	THE EUCLID CHEMICAL COMPANY	LARSEN PRODUCTS CORPORATION	MASTER BUILDERS, INC.
	"TAMMS WELD"	"WELD−CRETE"	"MASTERPROTECT P 110"

BONDING AGENT SHALL BE A READY TO USE POLYVINYL ACETATE RESIN EMULSION (REWETTABLE) APPLIED IN ACCORDANCE WITH MANUFACTURER'S RECOMMENDATIONS.

BOND BREAKER — 3A 84

PROVIDE BOND BREAKER AT JOINTS WHERE SHOWN ON THE DRAWINGS TO PREVENT CHEMICAL AND/OR MECHANICAL BOND.

TYPE OF SURFACE	BOND BREAKER
SMOOTH	COAT SURFACE COMPLETELY WITH APPROVED PARAFIN OIL
ROUGH	BOND ½" THICK WATERPROOF CARDBOARD TO HARDENED SURFACE

JOINT SEALANT — 3A 85

JOINT SEALANT SHALL BE A TWO COMPONENT, POLYURETHANE SEALANT CONFORMING TO FEDERAL SPECIFICATION TT−S−00227E.

USE SELF−LEVELING TYPE IN HORIZONTAL JOINTS.

USE NON−SAG TYPE IN VERTICAL OR OVERHEAD JOINTS.

PREPARE SURFACES & APPLY SEALANT IN ACCORDANCE WITH MANUFACTURER'S RECOMMENDATIONS.

SUBMIT PROPOSED JOINT SEALANT FOR APPROVAL.

CONCRETE SYMBOLS — 3A 65

- CONCRETE IN ELEVATION
- CAST IN PLACE CONCRETE IN SECTION
- EX — EXISTING CONCRETE
- CAST IN PLACE CONCRETE FILL OR TOPPING
- PRECAST CONCRETE
- MASS — MASS CONCRETE
- ROUGH OUTLINE OF EQUIPMENT
- SHEAR KEY AT CONSTRUCTION JOINT
- SCHEMATIC SECTION ELEVATION CHANGE
- METALLIC WATERPROOFING
- SLAB OR WALL OPENING
- RECESSED OR DEPRESSED AREA
- EARTH OR GRADE
- CONSTRUCTION JOINT WITH WATERSTOP

WATERSTOPS – TYPE 1 — 3A 73

TYPE 1 WATERSTOPS SHALL BE USED IN ALL APPLICATIONS UNLESS SPECIFIED OTHERWISE.

MATERIAL	MANUFACTURE FROM A PLASTIC COMPOUND WITH BASE RESIN OF POLYVINYL CHLORIDE (P.V.C.) & SHALL NOT CONTAIN SCRAP OR RECLAIMED MATERIAL.	
CHEMICAL RESISTANCE	INERT TO BACTERIAL ATOMSPHERE TO CHLORINATED WATER, TO SALT WATER, TO ACIDS, TO ALKALIS, TO SEWAGE WASTES & TO OIL.	
PHYSICAL PROPERTIES	SPECIFIC GRAVITY	1.38 MAX.
	DUROMETER HARDNESS	65 − 80
	TENSILE STRENGTH	2.0 k.s.i.
	ELONGATION	300% MIN.
	TEMPERATURE RANGE	−35°F TO +176°F
WATERSTOP INSTALLATION	PLACE CAREFULLY THRU SLOTS IN FORMS. SUPPORT RIGIDLY TO MAINTAIN POSITION DURING CONCRETE PLACEMENT. PROTECT FROM OIL, DIRT & DAMAGE. CLEAN PRIOR TO CONCRETE PLACEMENT. REPAIR DAMAGED WATERSTOPS.	
SPLICES	BUTT SPLICE IN ACCORDANCE WITH MANUFACTURER'S RECOMMENDATIONS	
PREFABRICATED ITEMS	PREFABRICATE CORNERS, TEES, CROSSES & SPECIAL INTERSECTIONS	

JOINT TYPE AS INDICATED ON THE DRAWINGS	MANUFACTURER OR EQUAL		
	BOMETALS, INC.	SIKA	VINYLEX CORPORATION
CONSTR. JT. (C.J.)	FR−638	679	R638
1" EXP. JT. (E.J.)	RCB−938NT	735	RB938H
2" EXP. JT. (E.J.)	RCB−938BR	726	RLB938

WATERSTOPS – TYPE 2 — 3A 74

TYPE 2 WATERSTOPS SHALL BE USED WHERE SPECIFIED.

MATERIAL	MANUFACTURE FROM A NON−BENTONITE MODIFIED CHLOROPRENE RUBBER WHICH WILL EXPAND UP TO 8 TIMES ITS ORIGINAL VOLUME WHEN IN CONTACT WITH WATER.	
CHEMICAL RESISTANCE	INERT TO BACTERIAL ATOMSPHERE TO CHLORINATED WATER, TO SALT WATER, TO ACIDS, TO ALKALIS, TO SEWAGE WASTES & TO OIL.	
PHYSICAL PROPERTIES	SPECIFIC GRAVITY	1.35 − 1.41
	DUROMETER HARDNESS	50 − 52
	TENSILE STRENGTH	1.3 k.s.i.
	ELONGATION	300% MIN.
	TEMPERATURE RANGE	−35°F TO +176°F
WATERSTOP INSTALLATION	INSTALL ON SMOOTH SURFACE. PROVIDE 3" MINIMUM CONCRETE COVER. BOND TO CONCRETE SURFACE USING MFR RECOMMENDED ADHESIVES (& CONCRETE NAILS IN VERTICAL APPLICATIONS) PROTECT FROM OIL, DIRT & DAMAGE. CLEAN PRIOR TO CONCRETE PLACEMENT. REPAIR DAMAGED WATERSTOPS.	
SPLICES	BUTT SPLICE USING CYANOACRYLATE ADHESIVE IN ACCORDANCE WITH MANUFACTURER'S RECOMMENDATIONS	

JOINT TYPE AS INDICATED ON THE DRAWINGS	MANUFACTURER OR EQUAL		
	HYDROTITE	SIKA	
CONSTR. JT. (C.J.)	CJ−0725	CJ−0725−3K	

QUICK SET HYDRAULIC COMPOUND

MANUFACTURER/PRODUCT OR EQUAL			
THE EUCLID CHEMICAL COMPANY	LARSEN PRODUCTS CORPORATION	SIKA CORPORATION	MASTER BUILDERS INC.
"SPEED−PLUG"	"WATERSTOP"	"SIKASET PLUG"	"MASTERSEAL 590"

APPLY COMPOUND IN ACCORDANCE WITH MANUFACTURER'S WRITTEN RECOMMENDATIONS.

VAPOR BARRIER — 3A 86

VAPOR BARRIER SHALL BE POLYETHELENE FILM:

ETHYL CORPORATION "VISQUEEN", UNION CARBIDE CORPORATION "ZENDEL" OR EQUAL, 6 MIL. NATURAL, APPLIED OVER AREAS OF PREPARED SUBGRADE AS INDICATED ON DRAWINGS.

USE WIDEST PRACTICABLE SEAMLESS WIDTH.

LAP EDGES 6" MINIMUM & SEAL WITH TAPE.

PLACE TOP LAP IN DIRECTION OF PLACEMENT.

COLD JOINTS — 3A 66

AVOID COLD JOINTS (HARDENING OR SETTING OF PREVIOUSLY PLACED CONCRETE TO AN EXTENT SO THAT FRESH CONCRETE DOESN'T BOND TO IT) BY COORDINATING SIZE OF PLACEMENT, WEATHER CONDITIONS, EQUIPMENT & LABOR TO PROVIDE CONTINUOUS CONCRETE PLACEMENT.

NOTIFY THE ENGINEER IMMEDIATELY IF UNAVOIDABLE SITUATION ARISES TO INTERUPT CONTINUOUS PLACEMENT & WHICH MIGHT RESULT IN COLD JOINTS.

SALVAGE AS MUCH OF THE PLACED CONCRETE AS POSSIBLE, UNLESS INSTRUCTED OTHERWISE, BY PROCEEDING AS FOLLOWS:

WALLS: LEVEL OFF CONCRETE & INSTALL SHEAR KEY

SLABS & BEAMS: INSTALL FULL DEPTH VERTICAL BULKHEAD WITH SHEAR KEY IN A LINE CENTERED ABOUT A HORIZONTAL PLANE AT MID−DEPTH OF THE MEMBER

INSTALL WATERSTOP IF ADJACENT CONSTRUCTION JOINTS REQUIRE THEM.

TREATMENT OF HARDENED CONCRETE — 3A 70

1) BEFORE DEPOSITING FRESH CONCRETE ON OR AGAINST HARDENED CONCRETE (EXISTING OR NEW) PREPARE SURFACE AS FOLLOWS :
CLEAN SURFACE THOROUGHLY TO REMOVE CURING COMPOUNDS, OTHER COATINGS & ANY FOREIGN MATTER OR LAITANCE.
DAMPEN SURFACE & REMOVE EXCESS WATER AT LIQUID CONTAINMENT ELEMENTS OR BELOW GROUNDWATER; BRUSH SURFACE WITH TWO COATS OF METALLIC WATERPROOFING.
AT ALL OTHER ELEMENTS; APPLY BONDING AGENT AS SHOWN ON THIS DRAWING.
COAT HORIZONTAL SURFACE WITH GROUT OF SAME PROPORTIONS AS MORTAR IN CONCRETE MIXTURE TO A MINIMUM THICKNESS OF 2".
PLACE FRESH CONCRETE, SEE 3A 22

2) BEFORE CUTTING, CORING OR DRILLING INTO EXISTING CONCRETE, THE EXISTING REINFORCEMENT SHALL BE LOCATED BY TRAINED PERSONNEL USING A PACHOMETER OR "J" METER AND ADJUSTMENTS SHALL BE MADE WHERE POSSIBLE TO REDUCE REINFORCEMENT DAMAGE AS APPROVED BY THE ENGINEER.

CONSTRUCTION JOINTS — 3A 67

LOCATE CONSTRUCTION JOINTS AS INDICATED ON THE DRAWINGS.

LOCATE VERTICAL WALL & SLAB JOINTS IN SAME PLANE, UNLESS OTHERWISE NOTED.

SCREED SURFACE OF HORIZONTAL JOINTS LEVEL.

JOINTS SHALL BE TRULY HORIZONTAL OR VERTICAL & PERPENDICULAR TO REINFORCEMENT.

PLACE SLABS & BEAMS AT SAME TIME UNLESS OTHERWISE SHOWN.

SUBMIT PROPOSED ADDED OR DELETED JOINTS FOR APPROVAL ON CONCRETE PLACEMENT DIAGRAM.

PROPOSED ADDED JOINTS SHALL BE MADE & LOCATED SO AS TO LEAST IMPAIR STRENGTH OF STRUCTURE. IN GENERAL, LOCATE AT MIDDLE OF SPAN FOR BEAMS, SLABS & WALLS.

SPACE VERTICAL CONSTRUCTION JOINTS AS FOLLOWS:

WALLS	20'−0" O.C. MAXIMUM
SLABS & BEAMS	40'−0" O.C. MAXIMUM
TOPPING	15'−0" O.C. MAXIMUM

PLACE WATERSTOPS SYMMETRICALLY IN CONSTRUCTION JOINTS WHERE POSSIBLE WHEN SLAB REINFORCEMENT DOES NOT PERMIT SYMMETRICAL PLACEMENT. LOCATE WATERSTOP IN CONTACT WITH REINFORCEMENT WITH REMAINDER PROJECTING INTO NEXT PLACEMENT.

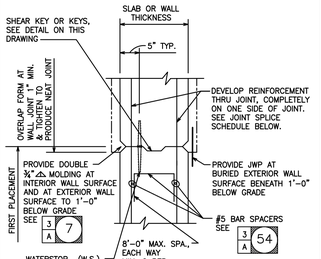

DETAIL
SLAB OR WALL JOINT
HORIZ. OR VERT. JOINT

JOINT SPLICE SCHEDULE

ELEMENT		CONSTR. JOINT DIRECTION	REINF. DIRECTION	REQUIRED LAP SPLICE ①
WALLS		HORIZ.	VERT.	TENSION OTHER BARS
		VERT.	HORIZ.	TENSION OTHER BARS
BEAMS & SLABS	LESS THAN 14" DEEP OR THICK	VERT.	HORIZ.	TENSION OTHER BARS
	14" DEEP OR THICK OR GREATER	VERT.	HORIZ.	TENSION TOP BARS

① FOR REQUIRED CLASS OF SPLICE, SEE REINFORCEMENT LAP SPLICES, SEE 3A 33

NONSHRINK GROUT — 3A 81

NONSHRINK GROUT SHALL BE PREMIXED NON−METALLIC, NON−STAINING DIMENSIONALLY STABLE, INORGANIC GROUT AS MANUFACTURED BY :

MANUFACTURER OR EQUAL	PRODUCTS OR EQUAL
MASTER BUILDERS	"MASTER FLOW 928"
W. R. MEADOWS, INC.	"588 − 10K"
DAYTON SUPERIOR CORP.	"SURE GRIP GROUT"
THE EUCLID CHEMICAL CO.	"NS GROUT"
LATICRETE	"L&M CRYSTEX"
FIVE STAR	"FIVE STAR GROUT"

NONSHRINK GROUT SHALL BE SUITABLE FOR USE IN WET & EXTERIOR APPLICATIONS.

NONSHRINK GROUT SHALL CONFORM TO CORPS OF ENGINEER CRD−C621−89 "SPECIFICATION FOR NONSHRINK GROUT" WITH ADDITIONS AS FOLLOWS:
PAR. 3.2 TYPE EXPANSIVE CEMENT
PAR. 4 REQUIREMENTS:
4.1.3 COMP. STRENGTH, 7000 psi MIN. AT 28 DAYS.
4.1.5 FLUIDITY, MODERATE FLUIDITY (FLOWABLE)

SUBMIT RECENT INDEPENDENT LABORATORY TEST RESULTS; COMPLIANCE WITH CRD−C621−89.

PREPARE AREA, FORM MIX & PLACE GROUT IN ACCORDANCE WITH MANUFACTURER'S WRITTEN RECOMMENDATIONS.

CONTROL JOINTS – WALLS — 3A 87

PLACE CONTROL JOINTS IN WALLS AT 20'−0" MAXIMUM SPACING OR MIDWAY BETWEEN CONSTR JTS WHICHEVER IS LESS, UNLESS LOCATIONS /MORE RESTRICTIVE SPACING ARE OTHERWISE SHOWN ON THE DRAWINGS. (CUT BAR)−CUT EVERY OTHER HORIZ BAR CONTINUOUS THROUGH JOINT.

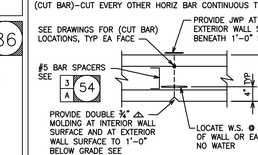

WALL CONTROL JOINT

EMBEDDED ITEMS — 3A 88

EMBEDDED ITEMS INCLUDE ANCHORS, BOLTS, CONDUITS, DOWELS, DRAINS, FRAMES FOR CHECKERED PLATE, GRATING OR MANHOLES, INSERTS, MANHOLE STEPS, STEEL CURBS, SLEEVES, STAIR NOSINGS, SUMP LININGS, TIES, WATERSTOPS, WEEP HOLES & OTHER ITEMS TO BE CAST IN CONCRETE.

ONLY PIPES AND SLEEVES 8" & LARGER ARE SHOWN ON THE STRUCTURAL DRAWINGS. SEE ARCHITECTURAL, ELECTRICAL & MECHANICAL DRAWINGS FOR REMAINDER OF EMBEDDED ITEMS.

PROVIDE SLEEVES AS DETAILED ON "MISCELANOEUS METALS SPECIFICATIONS" SHEET FOR CONDUITS, DUCTS, PIPES AND OTHER ITEMS PASSING THRU CONCRETE FLOORS AND WALLS.

NOTIFY CONTRACTOR WHOSE WORK IS RELATED TO CONCRETE OR MUST BE SUPPORTED BY IT TO PROVIDE THEM AMPLE OPPORTUNITY TO INTRODUCE AND/OR FURNISH EMBEDDED ITEMS BEFORE PLACEMENT OF CONCRETE.

POSITION EMBEDDED ITEMS ACCURATELY & FASTEN SECURELY TO SUPPORT AGAINST DISPLACEMENT PRIOR TO & DURING CONCRETE PLACEMENT.

FILL VOIDS IN ANCHOR SLOTS, INSERTS & SLEEVES TEMPORARILY WITH READILY REMOVABLE MATERIAL TO PREVENT ENTRY OF CONCRETE INTO VOIDS.

SHEAR KEYS — 3A 82

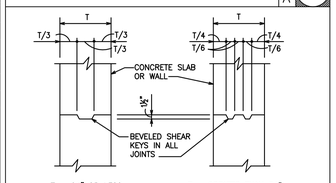

TERMINATE SHEAR KEYS 6" FROM EXPOSED EDGES & 6" EACH SIDE OF AN INTERSECTING WATERSTOP.

PROVIDE SHEAR KEYS IN ALL CONSTRUCTION JOINTS. SECTIONS MAY NOT SHOW ALL REQUIRED SHEAR KEYS.

Know what's below. Call before you dig. 811

REV.	DESCRIPTION	DATE	DRAWN	CHECKED
	ISSUED FOR BIDS SET	12−13−2021	PMH	SDH
	90% DESIGN SUBMITTAL	11−22−2021	PMH	SDH
	70% DESIGN SUBMITTAL	10−29−2021	PMH	SDH
	50% DESIGN SUBMITTAL	10−01−2021	PMH	SDH

CITY OF ANN ARBOR
PUBLIC SERVICES
301 EAST HURON STREET
P.O. BOX 8647
ANN ARBOR, MI 48107−8647
734.794.6410
www.a2gov.org

PROJECT MANAGEMENT - PUBLIC SERVICES - CITY OF ANN ARBOR

HEADWORKS IMPROVEMENTS PROJECT

CONCRETE SPECIFICATION - 3

SCALE AS NOTED

DRAWING No. 398

SHEET No. S-20

SPECIFICATIONS:

GENERAL REQUIREMENTS:

1. CONTRACTOR SHALL COORDINATE ALL WORK PRIOR TO INSTALLATION OR FABRICATION OF ANY COMPONENTS. ALL OPENINGS SHALL ALSO BE COORDINATED.
2. ALL WORK MUST CONFORM TO ALL STATUTES OF THE MICHIGAN BUILDING CODE (EDITION IN EFFECT AT THE TIME OF PERMIT), ALL STATE, COUNTY AND LOCAL ORDINANCES, CURRENT BARRIER FREE REGULATIONS, MIOSHA STRUCTURAL GUIDELINES, ASTM STANDARD TESTING PROCEDURES, OWNER'S PRACTICES AND GENERALLY ACCEPTED DESIGN PRACTICES. IF DISCREPANCIES IN DRAWING APPEAR, WORK MUST BE DONE PER CODE. CITY WILL COVER THE COST OF BUILDING, ELECTRICAL, MECHANICAL, AND PLUMBING PERMITS. CONTRACTOR MUST STILL APPLY FOR THE PERMITS.
3. EXISTING CONDITIONS OF BUILDING SHOWN ON CONSTRUCTION DOCUMENTS ARE ILLUSTRATIVE OF CONDITIONS VISIBLE TO ARCHITECT AND BASED ON EXISTING DRAWINGS. ALL EXISTING DIMENSIONS, CONDITIONS, SIZES & LOCATIONS ARE TO BE FIELD VERIFIED.
4. CONTRACTOR SHALL PROVIDE NEW OPENINGS AND SUPPORTS AS NOTED. FINAL OPENING DIMENSIONS, CONNECTION SIZES, CLEARANCES, ETC. MUST BE COORDINATED DURING CONSTRUCTION WITH APPROVED COMPONENTS. SEAL TIGHT ALL OPENINGS (ROOF, WALL AND CEILING), EQUIPMENT AND/OR PENETRATIONS – FROM AIR AND MOISTURE.
5. REFER TO SPECIFICATIONS FOR ADDITIONAL INFORMATION AND APPROVED MANUFACTURERS.
6. ALL INSTALLATIONS TO BE COORDINATED WITH EXISTING CONDITIONS FOR PROPER SIZE, LOCATION AND PROVISIONS REQUIRED TO INSTALL COMPONENTS.
7. PIPING & CONDUIT HANGERS AND SUPPORT LOCATION ARE NOT SHOWN ON DRAWINGS. THE CONTRACTOR SHALL PROVIDE THE PIPING AND CONDUIT HANGERS AND SUPPORTS NECESSARY AS REQUIRED PER CODE.
8. CONTRACTOR SHALL PROVIDE ALL REQUIRED TRANSITIONS, FITTINGS AND APPURTENANT CONNECTIONS.
9. CONFIRM ANY COLOR SELECTIONS WITH OWNER. COLORS TO COORDINATE WITH EXISTING BUILDINGS ON SITE.
10. PREVENT GALVANIC ACTION AND OTHER FORMS OF CORROSION BY INSULATING METALS OR OTHER MATERIALS FROM DIRECT CONTACT WITH INCOMPATIBLE MATERIALS.
11. SHOP DRAWINGS AND PRODUCT DATA – THE CONTRACTOR SHALL SUBMIT TO THE OWNER AND PROJECT ENGINEER, SHOP DRAWINGS & PRODUCT DATA SUBMITTALS FOR ALL PRODUCTS AND COMPONENTS TO BE USED ON THIS PROJECT. MAINTAIN ONE COPY OF ALL APPROVED SUBMITTALS AT THE SITE FOR THE OWNER'S REFERENCE.
12. "RECORD" DRAWINGS – THE CONTRACTOR SHALL MAINTAIN A SET OF "AS–BUILT" PRINTS, MARKED UP AT THE SITE, CONTAINING ALL "AS–BUILT" INFORMATION. TURN SET OVER TO ENGINEER UPON COMPLETION OF THE WORK.
13. INSTALL ALL MATERIALS IN COMPLIANCE W/ MFR. RECOMMENDATIONS AND CODE REQUIREMENTS.
14. CONTRACTOR MUST VERIFY ALL EXISTING UTILITY LOCATIONS PRIOR TO START OF DEMOLITION AND MAKE EVERY EFFORT TO PROTECT THEM OR RELOCATE AS REQUIRED.
15. ALL PERMANENT WOOD BLOCKING, SHEATHING, FRAMING, ETC. UTILIZED IN CONSTRUCTION TO BE FIRE RETARDANT TREATED.
16. CONTRACTORS TO REFER TO ENTIRE SET OF DRAWINGS AND SPECIFICATIONS FOR FULL SCOPE OF WORK. CROSS COORDINATION BETWEEN CIVIL, PROCESS, MECHANICAL, ELECTRICAL, STRUCTURAL AND ARCHITECTURAL DRAWINGS IS REQUIRED.

FOUNDATION & WALL INSULATION

1. 2 INCH THICK EXTRUDED POLYSTYRENE, OWENS CORNING "FOAMULAR" OR EQUAL, COMPLIANT WITH ASTM C578 TYPE IV AND ASTM E84.

FIRE EXTINGUISHERS:

1. FIRE EXTINGUISHERS & ACCESSORIES: DRY CHEMICAL TYPE, UL299, HEAVY DUTY STEEL CYLINDER W/ PRESSURE GAGE; RECHARGEABLE UNIT; TYPE 10–A–120–B:C; PAINTED FINISH, COLOR RED. PROVIDE CHROMED STEEL MOUNTING BRACKETS & ALUM. WALL SIGNAGE (WHITE GOTHIC LETTERS ON RED BACKGROUND), BRADY SIGNAGE NO. 43294, 14X10, ALUM. PROVIDE WITH SIGNAGE ABOVE EXTINGUISHER. EXACT LOCATIONS TO BE DETERMINED BY FIRE MARSHALL & OWNER IN FIELD. PROVIDE (1) EXTINGUISHER WALL MOUNTED ON BLDG. INTERIOR ADJACENT TO EACH EXTERIOR MANDOOR, AND STAIR DOOR WITH SIGNAGE ABOVE EXTINGUISHER AT BUILDING – TOTAL OF (3) FIXTURES.

GENERAL NOTES:

1. PROVIDE TEMPORARY OPENING PROTECTION TO PREVENT FALLS AND WEATHER INTRUSION AT ALL HATCHES/ACCESS COVERS AND FLOOR/ROOF OPENINGS THAT ARE TO BE REMOVED OR MODIFIED AS PART OF THIS WORK.
2. REFER TO PLANS AND ELEVATIONS FOR ALL BUILDINGS TO DETERMINE SCOPE OF EXTERIOR AND INTERIOR MASONRY REPOINTING. VERIFY EXACT EXTENT OF REPAIR EFFORTS IN THE FIELD.
3. INTERIOR SPACES OF BUILDINGS AFFECTED BY THIS WORK SCOPE ARE TO BE CLEANED OF ALL DUST AND DEBRIS PRIOR TO FINAL CLOSE OUT OF JOB.
4. ANY EXISTING BROKEN OR DAMAGED BRICK ARE TO BE REPLACED WITH NEW TO MATCH EXISTING (MODULE, COLOR, TEXTURE, ETC.) AT LOCATIONS SPECIFIED ON THE PLANS – SEE ARCHITECTURAL PLANS AND SPECIFICATIONS FOR ADDITIONAL INFORMATION. NEW MASONRY AT INFILL AND REPLACEMENT LOCATIONS MUST MATCH EXISTING AND BE TOOTHED INTO EXISTING.
5. CONTRACTORS TO REFER TO ENTIRE SET OF DRAWINGS AND SPECIFICATIONS FOR FULL SCOPE OF WORK. CROSS COORDINATION BETWEEN CIVIL, PROCESS, MECHANICAL, ELECTRICAL, STRUCTURAL AND ARCHITECTURAL DRAWINGS IS REQUIRED.
6. TOUCH UP PAINT AT WALLS AND CEILINGS WHERE DAMAGED OR DISTURBED BY WORK SCOPE. MATCH EXISTING COLOR/FINISH.
7. ADHERE TO DISPLAYED DIMENSIONS ON PLANS. DO NOT SCALE OFF OF PLANS. SUBMIT RFI IF APPARENT CONFLICT IS DETECTED.
8. REFER TO SPECIFICATION BOOK FOR A COPY OF THE HAZARDOUS MATERIAL REPORT, WHICH DELINEATES THE HAZARDOUS MATERIALS THAT MAY BE ENCOUNTERED DURING DEMOLITION/CONSTRUCTION.

SEALANT FOR NEW CONCRETE FLOORS (NOT RECEIVING OTHER FINISHES):

1. ALL NEW CONCRETE FLOOR SURFACES SHALL BE SEALED WITH EUCO–GUARD 100 BY EUCLID CHEMICAL IN ACCORDANCE WITH MANUFACTURER'S RECOMMENDATIONS. ALL CONCRETE FLOOR SURFACES SHALL BE PREPARED IN ACCORDANCE WITH MANUFACTURER'S RECOMMENDATIONS PRIOR TO APPLICATION

DENOTES PHOTO NUMBER AND SHEET (X / A–XX)

CODE REFERENCES

APPLICABLE CODES:

2015 MICHIGAN BUILDING CODE (MBC)
2017 NATIONAL ELECTRIC CODE (NEC) WITH MICHIGAN AMENDMENTS
2015 MICHIGAN MECHANICAL CODE
2018 MICHIGAN PLUMBING CODE
2015 MICHIGAN UNIFORM ENERGY CODE
2015 MICHIGAN REHAB CODE FOR EXISTING BUILDINGS (MRCEB)
ICC ANSI A117.1 – 2009
2015 INTERNATIONAL FIRE CODE

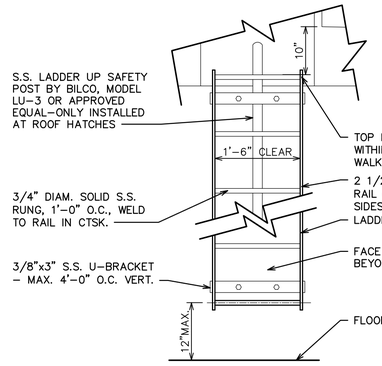

ROOF LADDER DETAIL
SCALE: 3/4" = 1'–0"

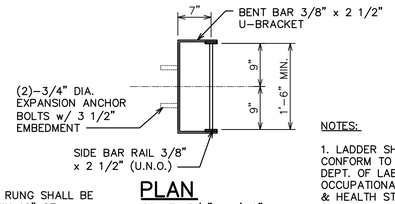

PLAN
SCALE: 3/4" = 1'–0"

NOTES:

1. LADDER SHALL CONFORM TO CURRENT DEPT. OF LABOR OCCUPATIONAL SAFETY & HEALTH STANDARD (O.S.H.A.).
2. PROVIDE ENGINEERED SHOP DRAWINGS FOR REVIEW PRIOR TO FABRICATION, INCLUDING ALL COMPONENTS, CONNECTIONS AND FASTENERS.
3. LADDER MATERIALS: STAINLESS STEEL.

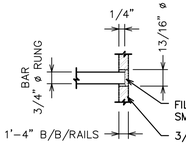

LADDER RUNG DETAIL
SCALE: N.T.S.

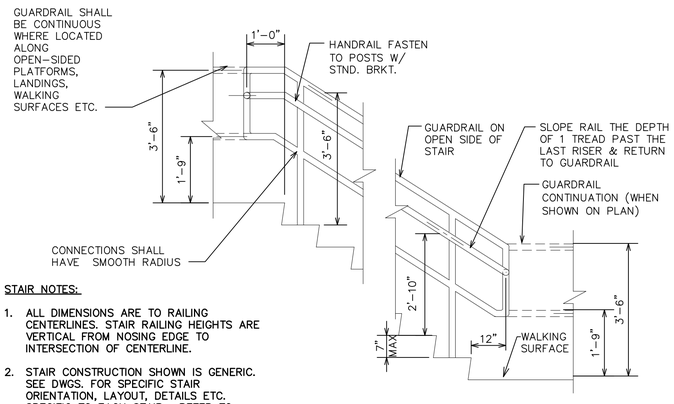

STAIR NOTES:

1. ALL DIMENSIONS ARE TO RAILING CENTERLINES. STAIR RAILING HEIGHTS ARE VERTICAL FROM NOSING EDGE TO INTERSECTION OF CENTERLINE.
2. STAIR CONSTRUCTION SHOWN IS GENERIC. SEE DWGS. FOR SPECIFIC STAIR ORIENTATION, LAYOUT, DETAILS ETC. SPECIFIC TO EACH STAIR. REFER TO SPECIFICATIONS AND STRUCTURAL DETAILS FOR FURTHER INFO.

TYP. GUARDRAIL/HANDRAIL ELEV.
SCALE: 1/2" = 1'–0"

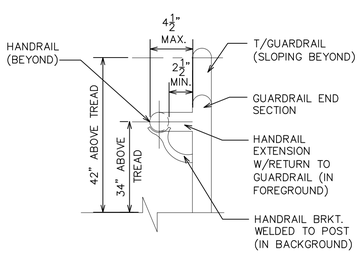

TYP. HANDRAIL RETURN–END VIEW
SCALE: 1 1/2" = 1'–0"

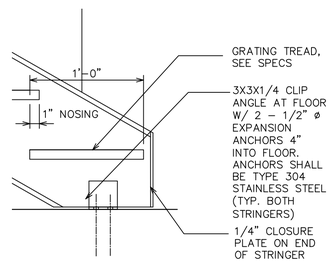

TYP. GRATING TREAD
SCALE: 1 1/2" = 1'–0"

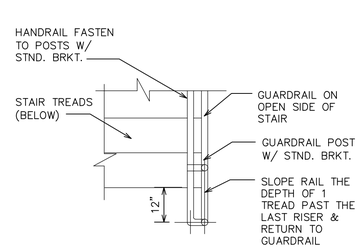

TYP. HANDRAIL RETURN–PLAN
SCALE: 1 1/2" = 1'–0"

Know what's below. Call before you dig. 811

REV.	DESCRIPTION	DATE	DRAWN	CHECKED
	50% DESIGN SUBMITTAL	10–01–2021		
	70% DESIGN SUBMITTAL	10–29–2021		
	90% DESIGN SUBMITTAL	11–22–2021		
	ISSUED FOR BIDS SET	12–13–2021		

CITY OF ANN ARBOR
PUBLIC SERVICES
301 EAST HURON STREET
P.O. BOX 8647
ANN ARBOR, MI 48107–8647
734–794–6410
www.a2gov.org

PROJECT MANAGEMENT - PUBLIC SERVICES - CITY OF ANN ARBOR

HEADWORKS IMPROVEMENTS PROJECT
ARCHITECTURAL NOTES AND DETAILS

SCALE: AS SHOWN
DRAWING No. 400

SHEET No. A–1

DOOR SCHEDULE

DOOR NO.	DOOR LOCATION	SIZE (WXH)	TYPE	SILL DTL.	JAMB DTL.	HEAD DTL.	INT.	EXT.	MATERIAL		HWOR. SET	LABEL	REMARKS
									DOOR	FRAME			
OD01	VESTIBULE	3'-0" X 7'-10"	C	S1	J1	H1		o	FRP	ALUM	1		SEE NOTES BELOW
OD02	VESTIBULE	(2) 3'-2" X 7'-10"	D	S1	J1	H1		o	FRP	ALUM	3		62" PANEL
OD03	FAN ROOM	(2) 3'-2" X 7'-10"	D	S1	J1	H1		o	FRP	ALUM	3		62" PANEL
OD04	FAN ROOM	3'-0" X 7'-0"	C	S1	J2	H2	o		FRP	ALUM	6		4" HEAD
H01	HEADWORKS	12'-0" X 9'-4"	A	SEE SHEET A-10				o	ALUM	STL			
H02	HEADWORKS	(2) 5'-0" X 9'-1"	E	SEE SHEET A-10				o	FRP	FRP	2		
H03	GARAGE	3'-0" X 7'-10"	F	SEE SHEET A-10				o	FRP	ALUM	1		TRANSOM

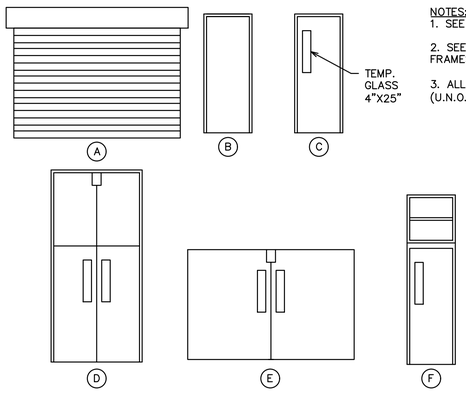

NOTES:
1. SEE SECTION 08710 FOR DOOR HARDWARE.
2. SEE SECTION 08225 FOR FRP DOORS & ALUM. FRAMES.
3. ALL FRAMES ARE 2" HIGH PROFILE, JAMS AND HEADS (U.N.O.).

DOOR AND WINDOW NOTES:

1. FIELD VERIFY ALL DOOR & WINDOW OPENING DIMENSIONS PRIOR TO FABRICATION.
2. ALL DOOR FRAMES SHALL BE GROUTED SOLID.
3. SEE SPECIFICATIONS FOR ADDITIONAL INFORMATION ON DOORS, FRAMES, WINDOWS AND HARDWARE.

ROOM FINISH NOTES:

1. AT GRADE LEVEL, PAINT EXPOSED CMU, PRECAST CEILINGS, EXPOSED STRUCT. STEEL, ANGLES, ETC.

2. PROVIDE CONCRETE FLOOR SEALER FOR BLDG. INTERIOR FLOOR SURFACES, CURBS ETC. (SEE ITEM 4 BELOW.) SEALER SHALL BE EUCO-GUARD 100 BY EUCLID CHEMICAL COMPANY OR ENGINEER APPROVED EQUAL.

3. ALL CONC. WALLS BELOW GRADE SHALL RECEIVE CONCRETE SEALER NOTED IN NOTE 2 ABOVE.

4. FLOORS, CONCRETE PADS/BASES, CONCRETE CURBS, CONCRETE STAIRS (INCLUDING UNDERSIDE OF LANDINGS) DO NOT REQUIRE PAINTING. THESE SURFACES DO REQUIRE CLEAR SEALER AS SPECIFIED ABOVE.

5. SEE SECTION 09900 FOR PAINTING REQUIREMENTS.

ROOM FINISH SCHEDULE

ROOM NO.	ROOM DESCRIPTION / ROOM NAME	FLOOR			BASE		CEILING			WALLS				CEILING HEIGHT (V.I.F)	REMARKS
		CONC., SEALED	EXISTING	NONE			CONCRETE (PTD.)	EXP. STRUCTURE		NORTH	SOUTH	EAST	WEST		WALL TYPES: A. = PAINT B. = UNFINISHED C. = CONC. SEAL.
	ODOR CONTROL														
OD100	DRY PIT	X		X			X			C	C	C	C	N/A	
OD200	LANDING VESTIBULE (INCLUDING BLOCK WALL OVER DRY PIT)	X		X			X			A	A	A	A	15'-4"	
OD201	FAN ROOM	X		X			X			A	A	A	A	15'-4"	
	GARAGE														
	NEW ELECTRICAL ROOM		X	X				X		A	A	B	A	14'-3"	ONLY PAINT CONC. SURFACES, NOT GLAZED BLOCK
	GARAGE		X	X				X		A	A	A	A	14'-3"	ONLY PAINT CONC. SURFACES, NOT GLAZED BLOCK

BRICK LINTEL SCHEDULE

OPENING CLEAR SPAN	LOOSE ANGLE
UP TO 4'-0"	L 4"x4"x1/4" (LLV)
UP TO 6'-0"	L 5"x4"x5/16" (LLV)
UP TO 8'-0"	L 6"x4"x3/8" (LLV)

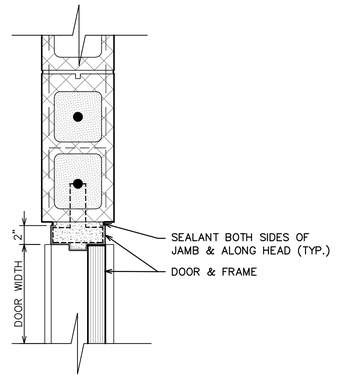

JAMB J2
SCALE: 1 1/2" = 1'-0"

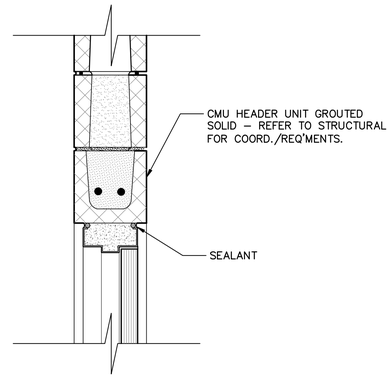

HEAD DETAIL H2
SCALE: 1 1/2" = 1'-0"

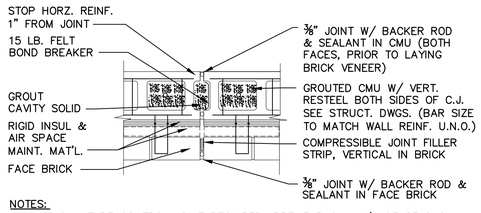

NOTES:
1. MICHIGAN TYPE CONTROL JOINT REQUIRED; PRE-FAB C.J. W/ USE OF SASH STYLE BLOCK NOT PERMITTED WITHOUT STRUCTURAL ENGINEER APPROVAL.
2. SEE STRUCTURAL DRAWINGS FOR CONTROL JOINT LOCATIONS IN ALL WALLS.
3. PROVIDE CONTROL JOINTS AT DOOR LINTELS AS SHOWN ON THE ARCHITECTURAL DRAWINGS.

TYP. MICHIGAN MASONRY CONTROL JOINT
SCALE: 1" = 1'-0"

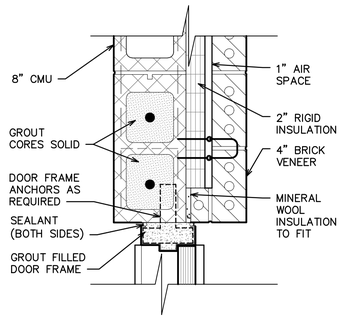

JAMB DETAIL J1
SCALE: 1 1/2" = 1'-0"

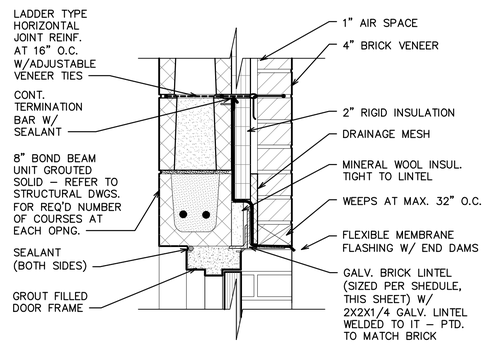

HEAD DETAIL H1
SCALE: 1 1/2" = 1'-0"

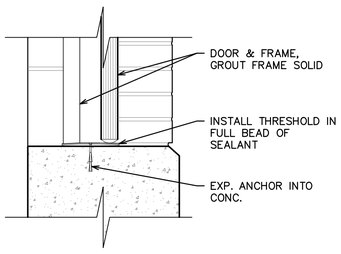

SILL DETAIL S1
SCALE: 1 1/2" = 1'-0"

811 Know what's below. Call before you dig.

REV.	DESCRIPTION	DATE	DRAWN	CHECKED
	ISSUED FOR BIDS SET	12-13-2021		
	90% DESIGN SUBMITTAL	11-22-2021		
	70% DESIGN SUBMITTAL	10-29-2021		
	50% DESIGN SUBMITTAL	10-01-2021		

CITY OF ANN ARBOR
PUBLIC SERVICES
301 EAST HURON STREET
P.O. BOX 8647
ANN ARBOR, MI 48107-8647
734.794-6410
www.a2gov.org

PROJECT MANAGEMENT - PUBLIC SERVICES - CITY OF ANN ARBOR

HEADWORKS IMPROVEMENTS PROJECT
ARCHITECTURAL SCHEDULES AND DETAILS

SCALE: AS SHOWN
DRAWING No. 401

SHEET No. A-2

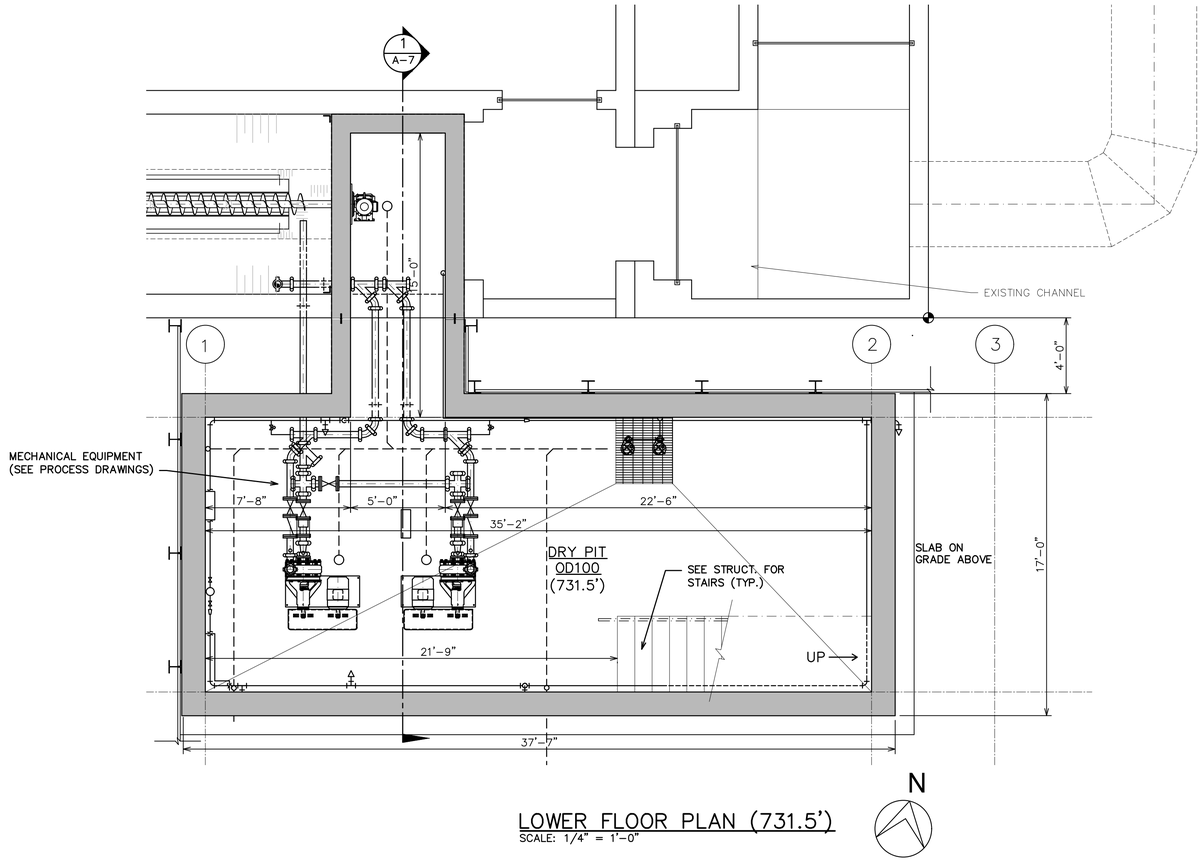

LOWER FLOOR PLAN (731.5')
SCALE: 1/4" = 1'-0"

811 Know what's **below.** **Call before you dig.**

REV.	DESCRIPTION	DATE	DRAWN	CHECKED
	50% DESIGN SUBMITTAL	10-01-2021		
	70% DESIGN SUBMITTAL	10-29-2021		
	90% DESIGN SUBMITTAL	11-22-2021		
	ISSUED FOR BIDS SET	12-13-2021		

CITY OF ANN ARBOR
PUBLIC SERVICES
301 EAST HURON STREET
P.O. BOX 8647
ANN ARBOR, MI 48107-8647
734.794.6410
www.a2gov.org

PROJECT MANAGEMENT - PUBLIC SERVICES - CITY OF ANN ARBOR

HEADWORKS IMPROVEMENTS PROJECT
ODOR CONTROL BUILDING LOWER FLOOR PLAN

SCALE AS SHOWN
DRAWING No. 403

SHEET No.
A-3

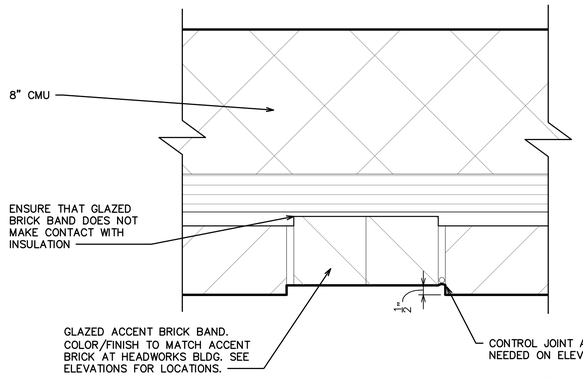

PLAN DETAIL AT ACCENT BAND (A / A-4)
SCALE: 3" = 1'-0"

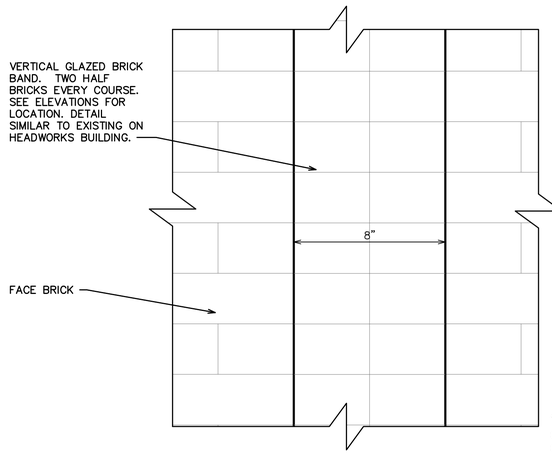

ACCENT BAND ELEVATION (B / A-4)
SCALE: 3" = 1'-0"

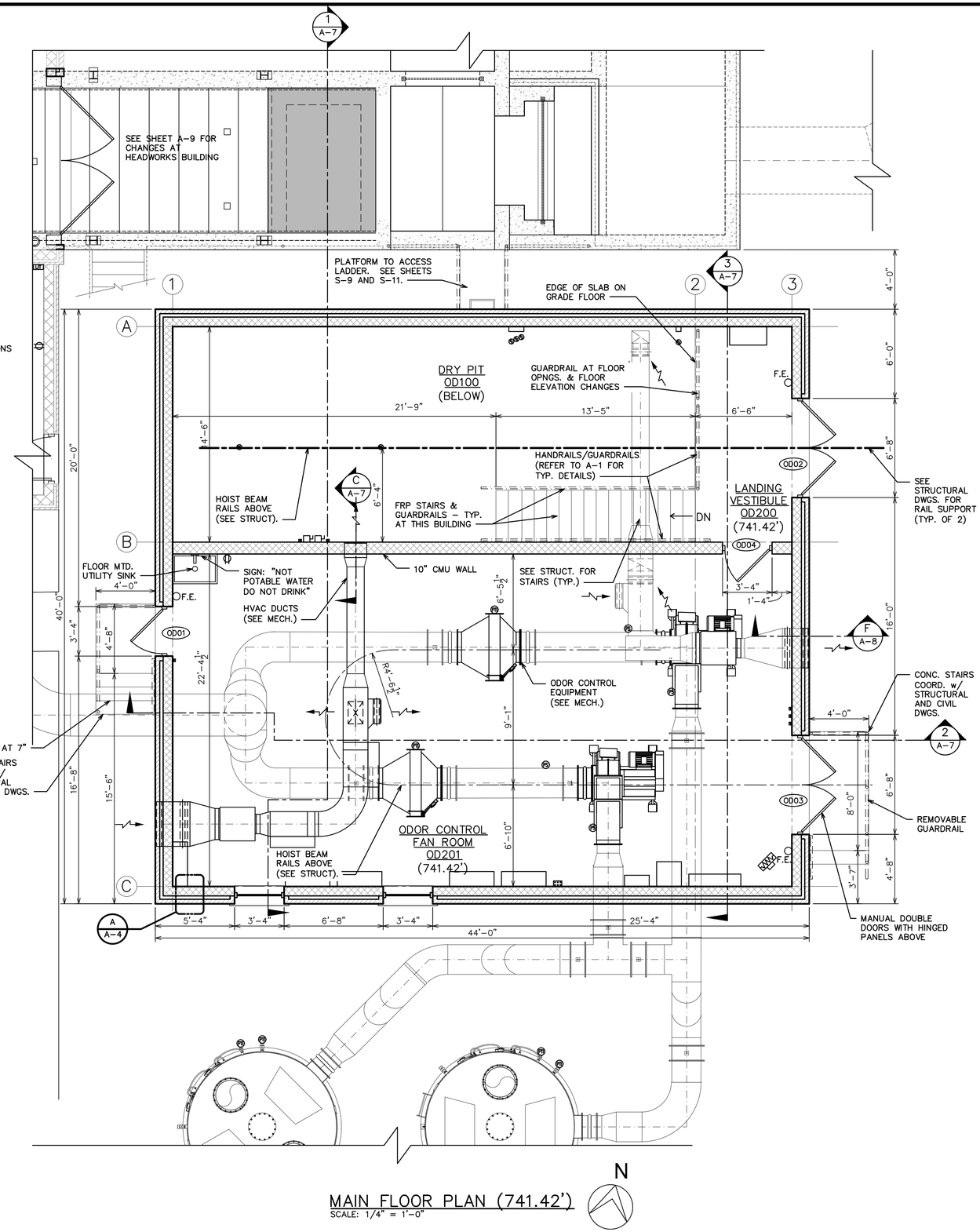

MAIN FLOOR PLAN (741.42')
SCALE: 1/4" = 1'-0"

N

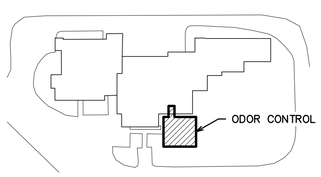

KEY PLAN
SCALE: N.T.S.

BUILDING DATA

FLOOR AREA – (1002.1): 1,645 S.F.		
OCCUPANCY LOAD: OCCUPANCY CLASSIFICATION PER TABLE 1004.1.2 IS MECHANICAL EQUIPMENT, 300 GROSS S.F. PER OCCUPANT.		NO. OF OCCUPANTS
DRY PIT	585/300 =	2
MAIN LEVEL	1,060/300 =	5

OCCUPANT LOAD MAY BE REDUCED BY CODE OFFICIAL TO REFLECT ACTUAL OCCUPANCY. BUILDING IS A NORMALLY UNOCCUPIED SPACE USED TO HOUSE SEWAGE PROCESSING EQUIPMENT.

TRAVEL DISTANCE (1016):
F-2 AREAS:
- DISTANCE TO AN EXIT ACCESS DOES NOT EXCEED 100 FEET FOR AREAS CONSTRUCTED UNDER THIS WORK WITH 1 EXIT.

ACCESSIBILITY (1103)
THIS BUILDING IS EXEMPT FROM ACCESSIBILITY REQUIREMENTS UNDER 1103.2.9. BUILDING IS AN UNOCCUPIED STRUCTURE HOUSING ODOR CONTROL EQUIPMENT. DOOR HARDWARE SHALL BE PROVIDED AS SPECIFIED AND INSTALLED IN ACCORDANCE WITH DIVISION 8 SPECIFICATIONS.

OCCUPANCY GROUP (306.3): FACTORY INDUSTRIAL F-2 LOW HAZARD OCCUPANCY

CONSTRUCTION TYPE (TABLE 601): IIB UNSPRINKLED

ALLOWABLE HEIGHT/AREA:

	MAXIMUM	PROVIDED
FOOTPRINT AREA	23,000 S.F.	1,645 S.F.
HEIGHT	55' (3 STORIES)	18'-4" (2 STORY)

ENERGY CODE REQUIREMENTS:

	REQ'D	PROVIDED
MASS WALLS	11.4 C.I. MIN.	11.4 C.I.
ROOF INSULATION	R-30 MIN.	R-30 (MIN.)
DOORS	U-0.5 MAX.	U-0.5
SLAB	R-14.6 MIN.	R-17.1

Know what's below. Call before you dig. 811

REV.	DESCRIPTION	DATE	DRAWN	CHECKED
	50% DESIGN SUBMITTAL	10-01-2021		
	70% DESIGN SUBMITTAL	10-29-2021		
	90% DESIGN SUBMITTAL	11-22-2021		
	ISSUED FOR BIDS SET	12-13-2021		

CITY OF ANN ARBOR
PUBLIC SERVICES
301 E. HURON STREET
P.O. BOX 8647
ANN ARBOR, MI 48107-8647
(734) 794-6410
www.a2gov.org

PROJECT MANAGEMENT - PUBLIC SERVICES - CITY OF ANN ARBOR

HEADWORKS IMPROVEMENTS PROJECT
ODOR CONTROL BUILDING MAIN FLOOR PLAN

SCALE: AS SHOWN
DRAWING No.: 404

SHEET No.
A-4

NON–PERMANENT GUARDRAIL:

1. PROVIDE FREESTANDING, NON–PENETRATING, WEIGHTED–BASE GUARDRAIL SYSTEM TO COMPLY WITH FALL PROTECTION REQUIREMENTS OF THE CURRENT MICHIGAN BUILDING CODE AND MIOSHA STANDARDS. SYSTEM BY NYSTROM, SKYLINE FALL PROTECTION OR APPROVED EQUAL.
2. PROVIDE SHOP DRAWINGS AND CALCULATIONS FOR ALL COMPONENTS AND LAYOUTS FOR REVIEW AND APPROVAL. SHOP DRAWINGS TO BE SEALED BY A LICENSED PROFESSIONAL ENGINEER CURRENTLY REGISTERED IN THE STATE OF MICHIGAN. PROVIDE SEALED STRUCTURAL LOAD CALCULATIONS FOR DESIGN AS PART OF SUBMITTALS.
3. SEALED CALCULATIONS SHALL INCLUDE THE FOLLOWING:
   - 3.1. GOVERNING LOAD CASES PER MBC AND ASCE 7, CURRENT EDITIONS
   - 3.2. SECTION PROPERTIES FOR ALL ELEMENTS OF SYSTEM INCLUDING BUT NOT LIMITED TO RAILS, POSTS, FLANGES, BASE PLATES AND CONNECTOR ELEMENTS
   - 3.3. GOVERNING LIMIT STATES FOR ALL ELEMENTS LISTED IN 3.2
   - 3.4. ACTING AND ALLOWABLE STRESSES FOR ALL ELEMENTS LISTED IN 3.2 AND CONCRETE BEARING PER AISC 360 SPECIFICATION FOR STRUCTURAL STEEL BUILDINGS AND AISC MANUAL OF STEEL CONSTRUCTION, CURRENT EDITIONS
   - 3.5. MINIMUM SAFETY FACTOR FOR RATIO OF ALLOWABLE VERSUS ACTING STRESSES SHALL BE 1.50
   - 3.6. PROVIDE ANALYSIS OF WELDS AND CONNECTORS, WHERE USED
   - 3.7. LOAD SHARING AND OVERSTRESS ALLOWANCE ARE NOT PERMITTED
4. POSTS, RAILS, BASE PLATES, SWING GATES AND CONNECTORS TO BE GALVANIZED STEEL, SUITABLE FOR EXTERIOR USE. ALL COMPONENTS TO BE PAINTED METALLIC SILVER PER SPECS TO COORDINATE WITH PAINTED GUARDRAIL ELSEWHERE IN PROJECT.
5. SWING GATE TO BE SECURED TO GUARDRAIL SYSTEM. GATE MUST BE SELF–CLOSING WITH APPLIED SAFETY USE GRAPHICS, SUITABLE FOR EXTERIOR USE. MINIMUM CLEAR OPENING OF GATE TO BE 30" WIDE.
6. PROVIDE ADDITIONAL SHEET OF COMPATIBLE MEMBRANE ROOFING (MIN. 60 MIL THICK) DIRECTLY BELOW NEW BASE PLATES TO PROTECT EXISTING ROOFING.
7. REFER TO DRAWINGS FOR LOCATIONS AND CONFIGURATIONS OF RAILING AT EACH BUILDING.

ROOFING NOTES:

1. ONLY MAJOR ROOF PENETRATIONS & EQUIP. ARE SHOWN. THE ROOF PLAN REPRESENTS THE GENERAL WORK AREA ONLY. THE CONTRACTOR SHALL FIELD VERIFY ALL CONDITIONS, OPENINGS, ETC. PRIOR TO BEGINNING WORK, WHETHER OR NOT THEY ARE SPECIFICALLY SHOWN ON THIS PLAN.
2. PROVIDE WALKWAY PADS FROM ROOF HATCH TO ALL H&V UNITS, FANS, ROOF DRAINS, ETC. IN THE MOST DIRECT ROUTE OF TRAVEL.
3. PROVIDE NEW MIFAB RUBBER SUPPORT BLOCKS AT ROOF AREA FOR CONDUIT(S) & GAS PIPING. INSTALL PER MANUFACTURER'S RECOMMENDATIONS.
4. METALS FOR NEW FLASHING SHALL BE AS SPECIFIED IN SECTION 07620.
5. PROVIDE NEW FABRICATED FLASHINGS AT PENETRATIONS PER ROOFING MANUFACTURER REQUIREMENTS FOR WARRANTY COVERAGE SPECIFIED. PROVIDE PRE–FABRICATED ROOF CURBS FOR ALL NEW OPENINGS LARGER THAN 8" DIAM.
6. ALL CURBS SHALL BE EXTENDED TO MIN. 8" ABOVE TOP OF ROOFING. INSTALL NEW MEMBRANE UP AND OVER CURBS, FASTEN TO INSIDE FACE OF CURBS PER ROOFING MFR. STANDARD DETAIL. (TYP.)
7. PROVIDE MIN. 1/4" PER FT. SLOPE AT ENTIRE ROOF AREA (U.N.O.).
8. ROOF SADDLES ARE TO HAVE A MIN. SLOPE OF 1/2" PER FT. SLOPE (U.N.O.).
9. PROVIDE CRICKETS ON HIGH SIDE OF ALL CURBED ITEMS. MIN 1/2" PER FOOT (U.N.O.) PER ROOFING MANUFACTURERS WARRANTY REQUIREMENTS.
10. INSTALL CONTROL JOINTS PER MFR. RECOMMENDATIONS WITH COMPRESSIBLE TUBE.
11. REFER TO MECHANICAL DRAWINGS FOR PLUMBING AND ROOF EQUIPMENT COORDINATION AND PENETRATION LOCATIONS.

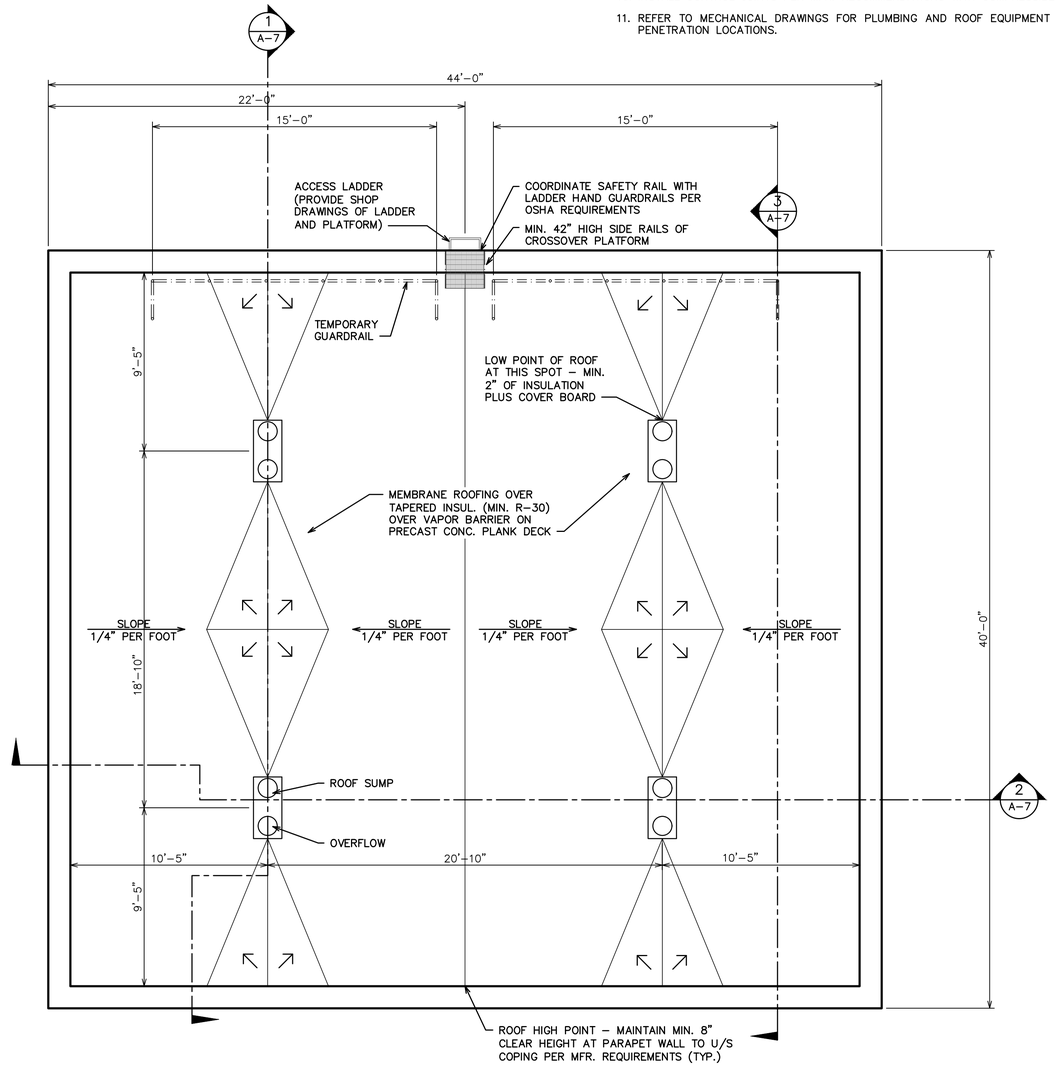

ROOF PLAN
SCALE: 1/4" = 1'–0"

811 Know what's below. Call before you dig.

REV.	DESCRIPTION	DATE	DRAWN	CHECKED
	ISSUED FOR BIDS SET	12–13–2021		
	90% DESIGN SUBMITTAL	11–22–2021		
	70% DESIGN SUBMITTAL	10–29–2021		
	50% DESIGN SUBMITTAL	10–01–2021		

CITY OF ANN ARBOR
PUBLIC SERVICES
301 EAST HURON STREET
P.O. BOX 8647
ANN ARBOR, MI 48107-8647
(734) 794-6410
www.a2gov.org

PROJECT MANAGEMENT - PUBLIC SERVICES - CITY OF ANN ARBOR

HEADWORKS IMPROVEMENTS PROJECT
ODOR CONTROL BUILDING ROOF PLAN

SCALE AS SHOWN

DRAWING No. 405

SHEET No. A–5

ELEVATION NOTES

1	4" BRICK VENEER – MATCH EXISTING BRICK AT HEADWORKS BLDG.	10	ALUMINUM WINDOW
2	DUCT PENETRATING WALL – COORD. SIZE/LOCATION WITH MECH. SHEETS	11	EXTERIOR WALL MOUNT LIGHT FIXTURE (REFER TO ELEC. DWGS.)
3	PRE-FIN. METAL PARAPET CAP W/ CONCEALED CLEATS & HEMMED EDGE	12	LIMESTONE WINDOW SILL
4	MASONRY CONTROL JOINT	13	"COW'S TONGUE" OVERFLOW DRAIN
5	SLIP PLANES AT WIDE DOOR HEADERS (REFER TO STRUCTURAL DWGS.)	14	ROOF ACCESS LADDER WITH PLATFORM
6	DOOR & FRAME	15	TEMPORARY GUARDRAIL
7	INSULATED DOOR PANEL AT TRANSOM	16	–
8	PLATES MOUNTED TO DOORS, COPED TO FIT AROUND BEAMS W/ RUBBER OR BRUSH GASKET AT EDGE	17	BRICK CONTROL JOINT
9	GLAZED TILE ACCENT BAND		SEE SPECIFICATIONS FOR ADDITIONAL INFORMATION AND REQUIREMENTS

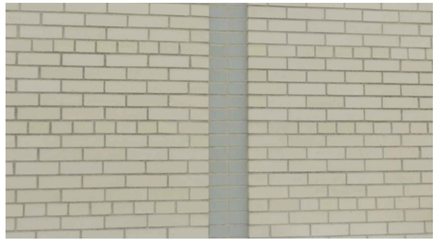

PHOTO OF EXISTING DECORATIVE BRICK TO MATCH
SCALE: N.T.S.

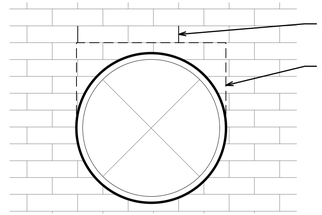

DUCT WALL PENETRATION CONDITION (A / A-6)
SCALE: 1" = 1'-0"

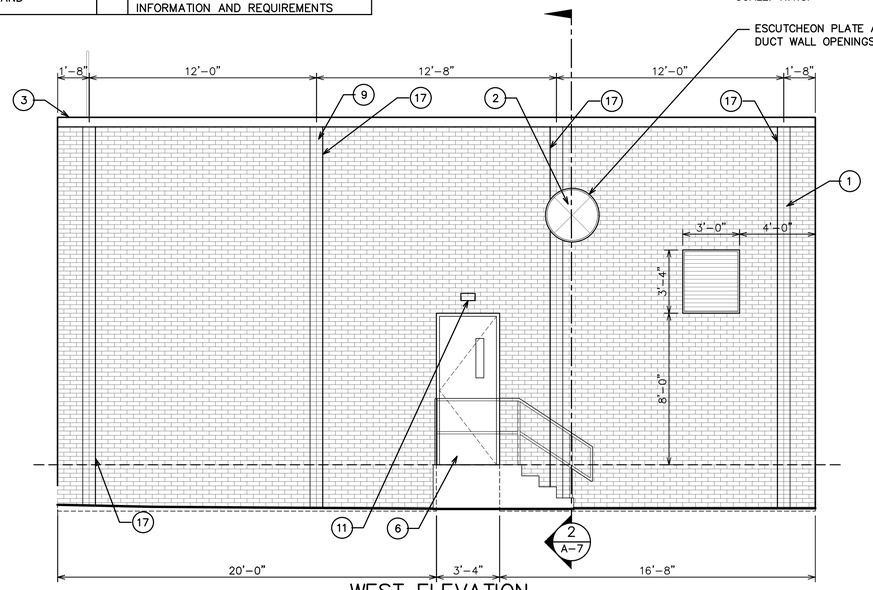

WEST ELEVATION
SCALE: 1/4" = 1'-0"

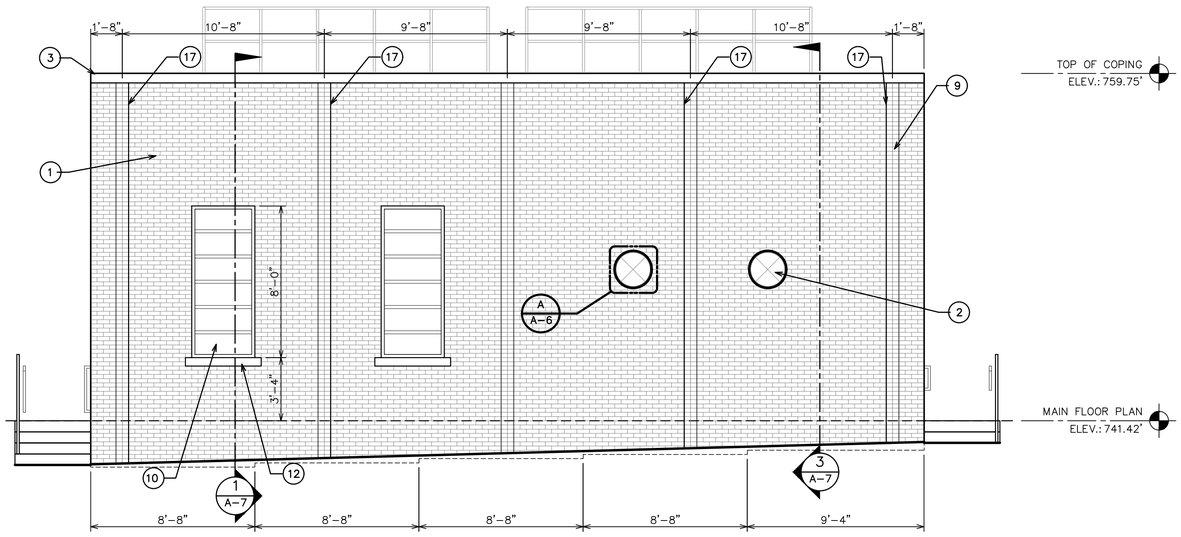

SOUTH ELEVATION
SCALE: 1/4" = 1'-0"

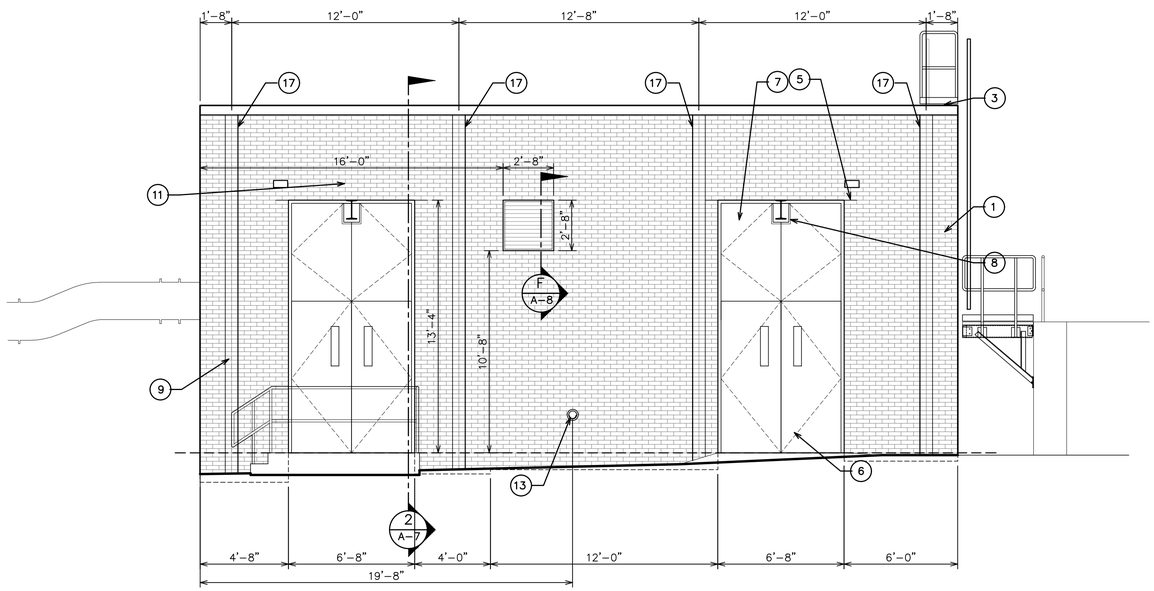

EAST ELEVATION
SCALE: 1/4" = 1'-0"

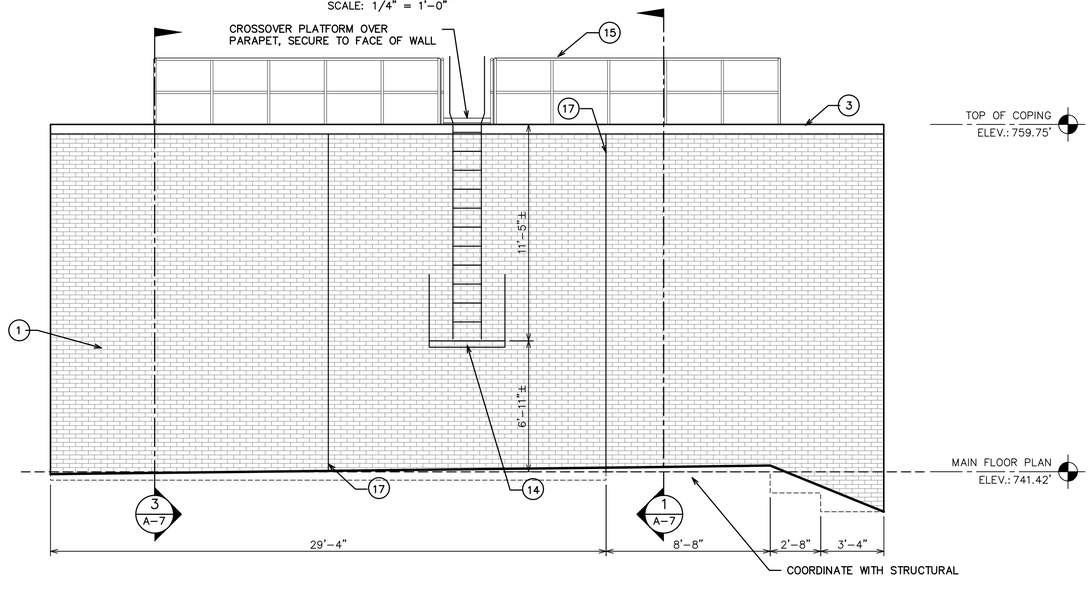

NORTH ELEVATION
SCALE: 1/4" = 1'-0"

811 Know what's below. Call before you dig.

ISSUED FOR BIDS SET	12-13-2021			
90% DESIGN SUBMITTAL	11-22-2021			
70% DESIGN SUBMITTAL	10-29-2021			
50% DESIGN SUBMITTAL	10-01-2021			
DESCRIPTION	DATE	DRAWN	CHECKED	
REV.				

CITY OF ANN ARBOR
PUBLIC SERVICES
301 E. HURON STREET
P.O. BOX 8647
ANN ARBOR, MI 48107-8647
734.794.6410
www.a2gov.org

PROJECT MANAGEMENT - PUBLIC SERVICES - CITY OF ANN ARBOR

HEADWORKS IMPROVEMENTS PROJECT
ODOR CONTROL BUILDING ELEVATIONS

SCALE: AS SHOWN
DRAWING No.: 406

SHEET No.
A-6

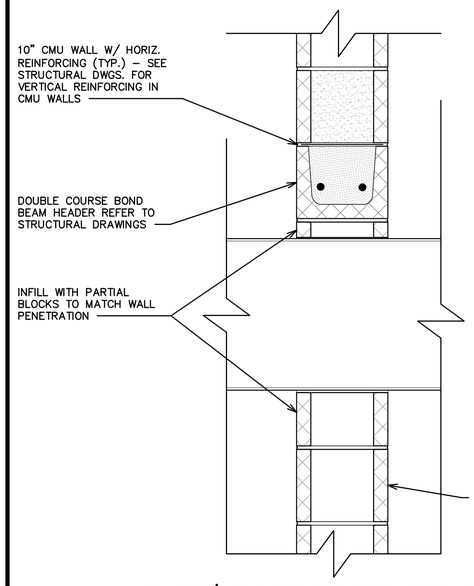

DUCT/LOUVER PENETRATION THRU 10" CMU DETAIL

SCALE: 1 1/2" = 1'-0" — C / A-4

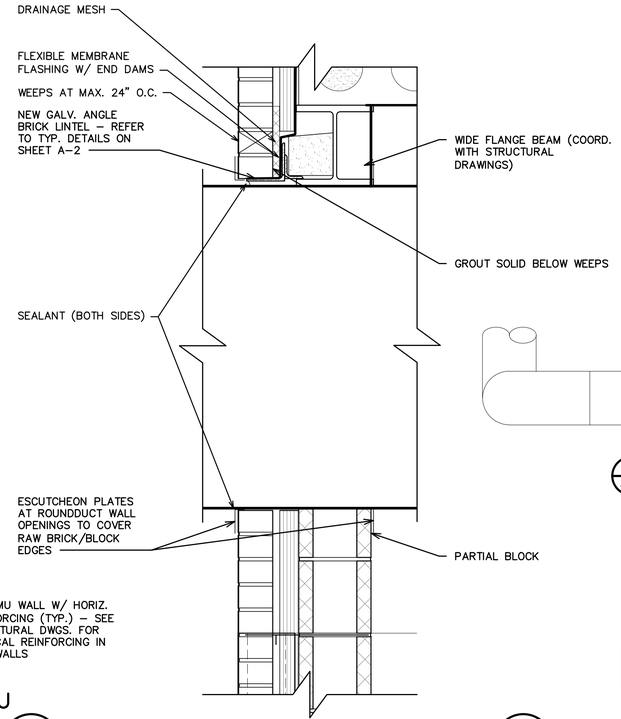

LARGE DUCT PENETRATION DETAIL

SCALE: 1 1/2" = 1'-0" — B / A-7

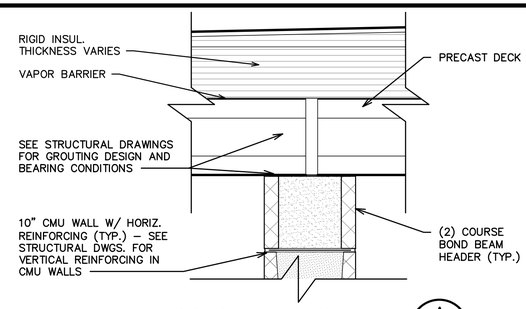

TOP OF WALL DETAIL

SCALE: 1 1/2" = 1'-0" — A / A-7

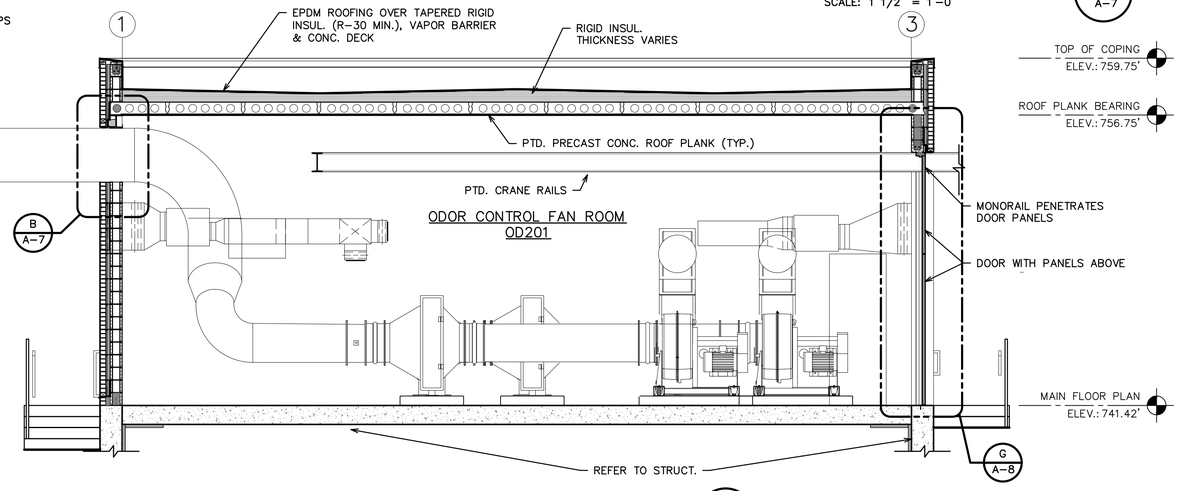

BUILDING SECTION

SCALE: 1/4" = 1'-0" — 2 / A-4

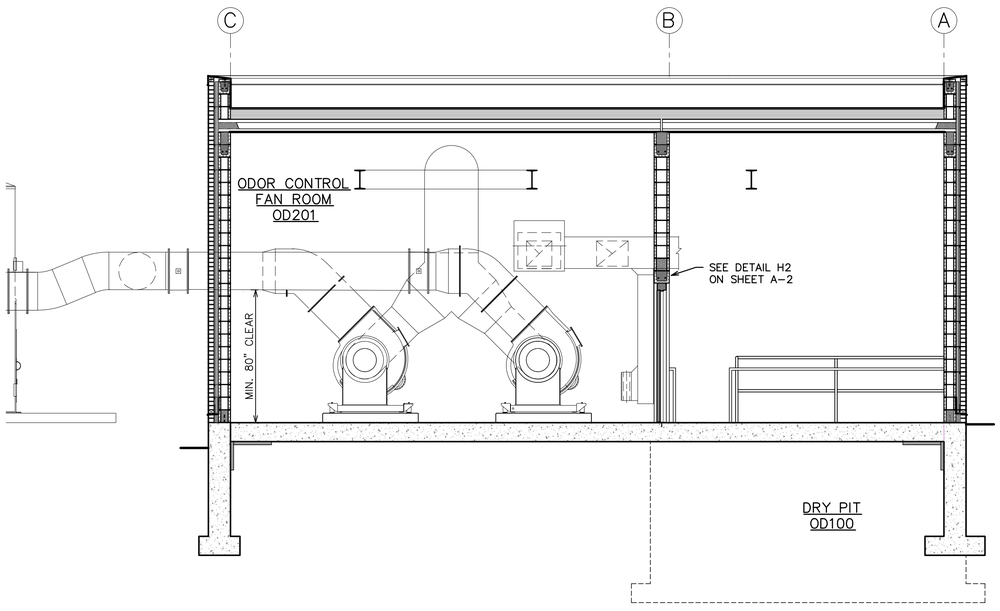

BUILDING SECTION

SCALE: 1/4" = 1'-0" — 3 / A-4

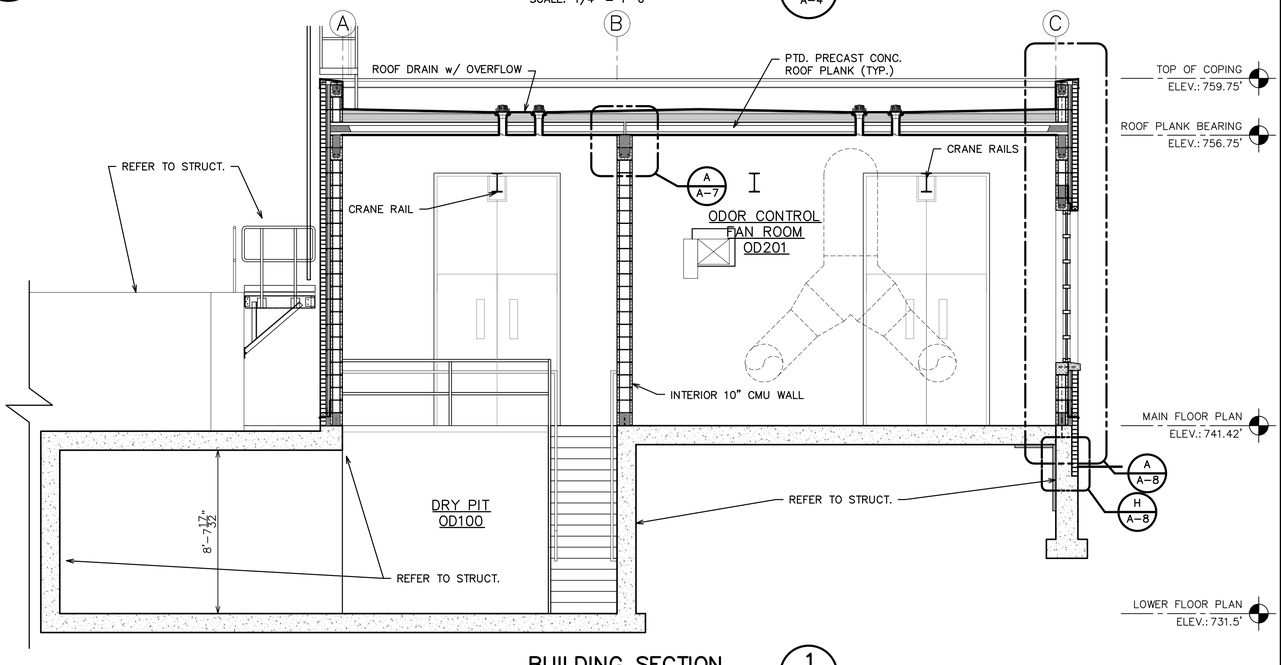

BUILDING SECTION

SCALE: 1/4" = 1'-0" — 1 / A-4

811 Know what's below. Call before you dig.

REV.	DESCRIPTION	DATE	DRAWN	CHECKED
	50% DESIGN SUBMITTAL	10-01-2021		
	70% DESIGN SUBMITTAL	10-29-2021		
	90% DESIGN SUBMITTAL	11-22-2021		
	ISSUED FOR BIDS SET	12-13-2021		

CITY OF ANN ARBOR
PUBLIC SERVICES
301 EAST HURON STREET
P.O. BOX 8647
ANN ARBOR, MI 48107-8647
(734) 794-6410
www.a2gov.org

PROJECT MANAGEMENT - PUBLIC SERVICES - CITY OF ANN ARBOR

HEADWORKS IMPROVEMENTS PROJECT

ODOR CONTROL BUILDING SECTIONS

SCALE: AS SHOWN

DRAWING No. 407

SHEET No. A-7

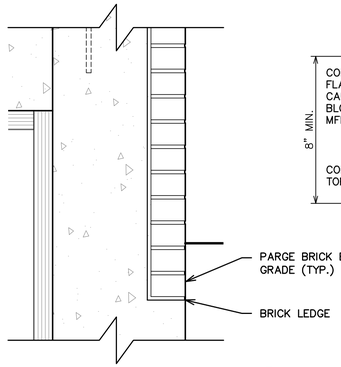

WALL BASE DETAIL (H, A–8)
SCALE: 1 1/2" = 1'–0"

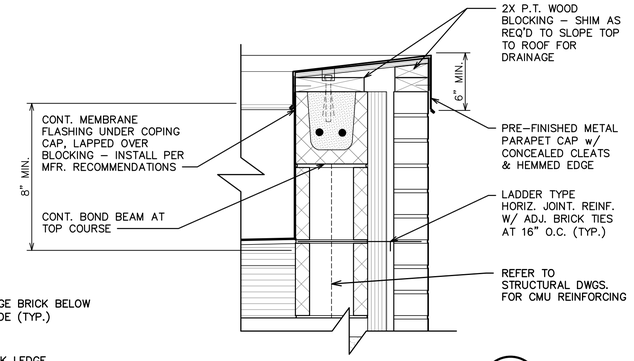

PARAPET DETAIL (D, A–8)
SCALE: 1 1/2" = 1'–0"

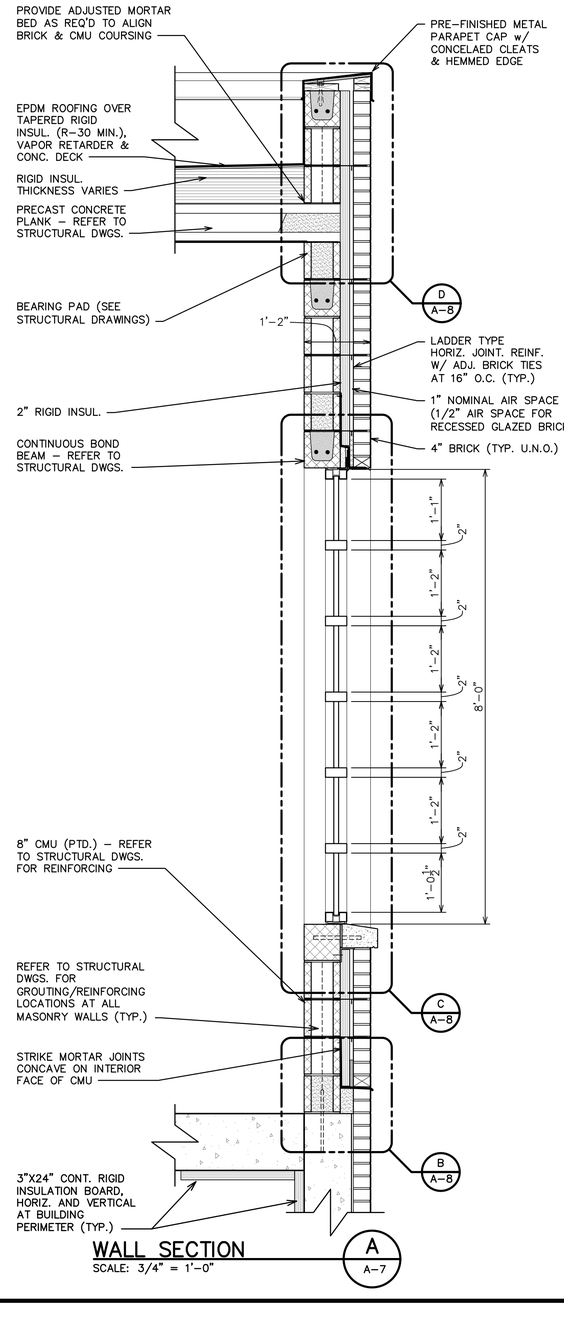

WALL SECTION (A, A–7)
SCALE: 3/4" = 1'–0"

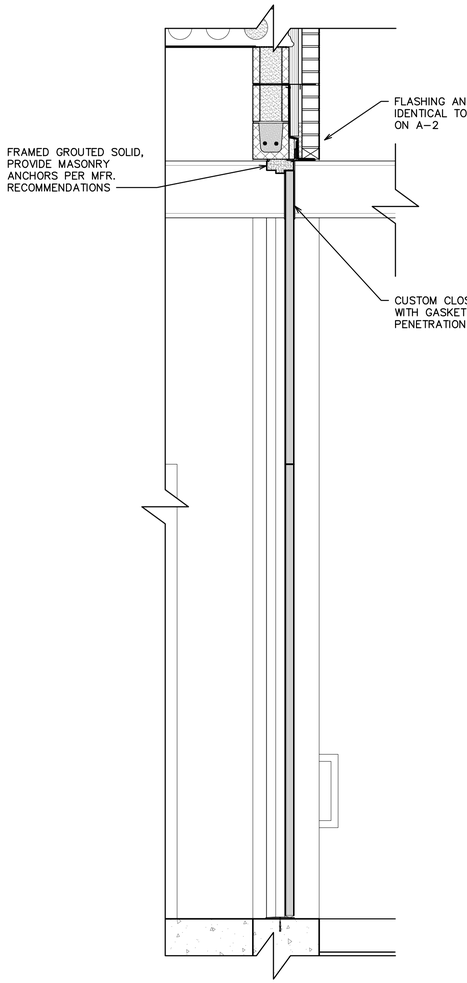

WALL SECTION (G, A–7)
SCALE: 3/4" = 1'–0"

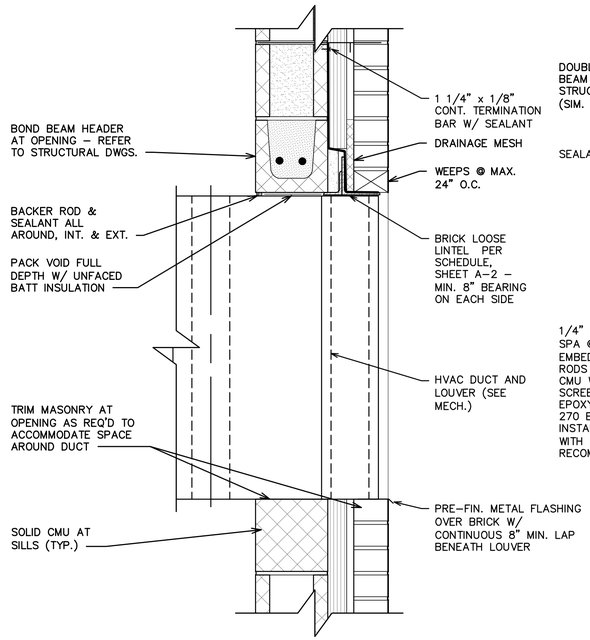

TYPICAL LOUVER WALL PENETRATION DETAIL (F, A–4)
SCALE: 1 1/2" = 1'–0"

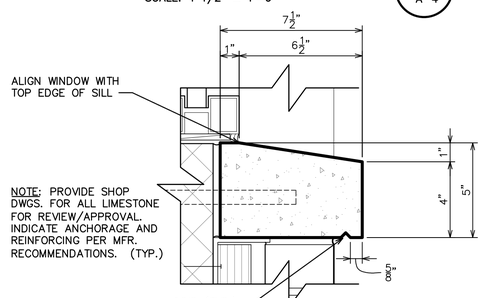

SILL DETAIL (E, A–8)
SCALE: 3" = 1'–0"

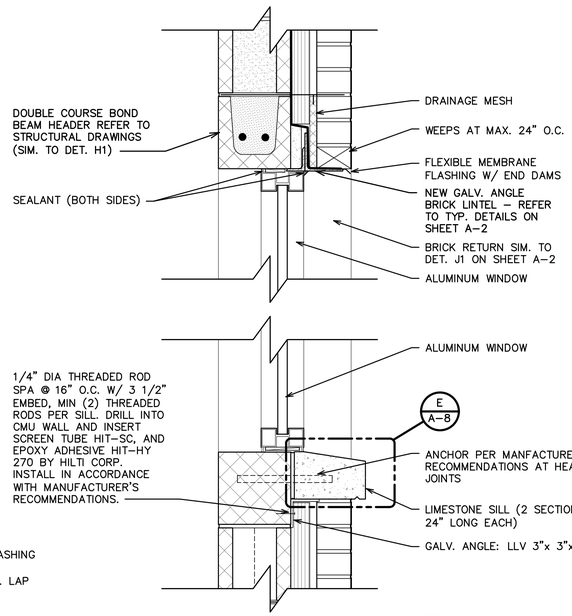

WINDOW DETAIL (C, A–8)
SCALE: 1 1/2" = 1'–0"

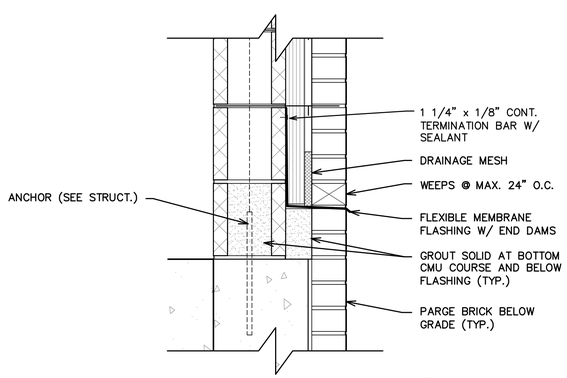

WALL BASE DETAIL (B, A–8)
SCALE: 1 1/2" = 1'–0"

811 Know what's below. Call before you dig.

REV.	DESCRIPTION	DATE	DRAWN	CHECKED
	ISSUED FOR BIDS SET	12–13–2021		
	90% DESIGN SUBMITTAL	11–22–2021		
	70% DESIGN SUBMITTAL	10–29–2021		
	50% DESIGN SUBMITTAL	10–01–2021		

CITY OF ANN ARBOR
PUBLIC SERVICES
301 E. HURON STREET
P.O. BOX 8647
ANN ARBOR, MI 48107-8647
734.794.6410
www.a2gov.org

PROJECT MANAGEMENT - PUBLIC SERVICES - CITY OF ANN ARBOR
HEADWORKS IMPROVEMENTS PROJECT
ODOR CONTROL SECTIONS AND DETAILS

SCALE: AS SHOWN
DRAWING No. 408
SHEET No. A–8

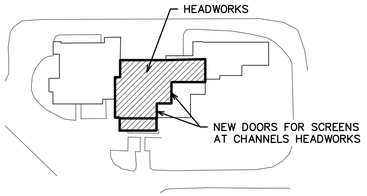

KEY PLAN
SCALE: N.T.S.

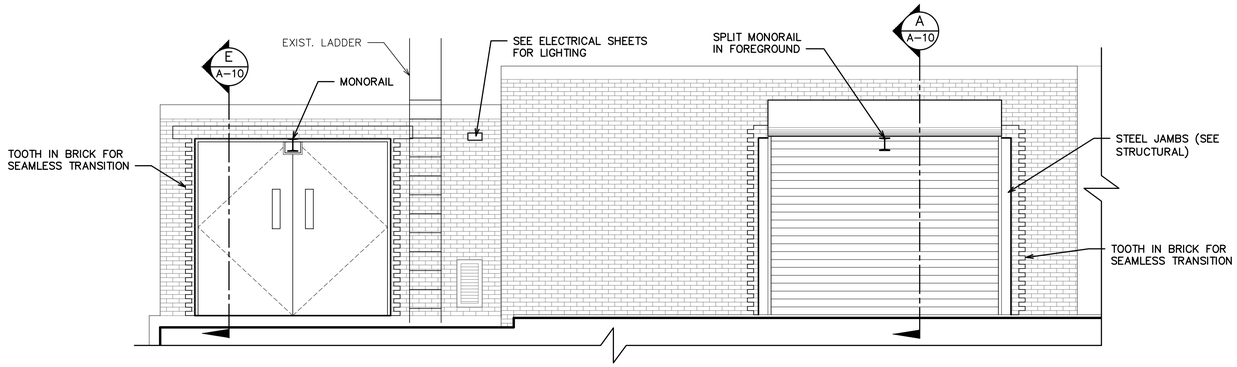

HEADWORKS EAST ELEVATION
SCALE: 1/4" = 1'-0"

NOTE:

THESE DRAWINGS ARE BASED ON FIELD MEASUREMENTS AND INDICATE THE GENERAL ARRANGEMENT OF THE EXISTING FACILITY. NO GUARANTEE IS MADE, OR SHOULD BE ASSUMED, AS TO THE COMPLETENESS OR ACCURACY OF THE INFORMATION SHOWN ON THIS DRAWING. PARTIES USING THIS INFORMATION SHALL FIELD VERIFY THE ACCURACY AND COMPLETENESS PRIOR TO DEMOLITION AND CONSTRUCTION ACTIVITIES.

HEADWORKS SCOPE ITEMS

DESCRIPTION	UNIT	AMOUNT
RECAULK EXTERIOR JOINTS AND OPENINGS AT REPAIRED AREAS	LS	1
BRICK REPOINTING	LF	150
PAINT LINTELS AT REPAIRED OPENINGS	EA	4
BRICK REPLACEMENT	EA	6
NEW DOORS	LS	1
NEW DUCT OPENINGS	LS	1
ELECTRICAL ROOM WORK	LS	1

NOTES:
THE QUANTITIES AND DESCRIPTIONS ABOVE ARE PROVIDED FOR CLARIFICATION AND INFORMATION ONLY. THE CONTENTS OF THIS TABLE ARE TO BE USED FOR THE CONSTRUCTION BIDDING PROCESS ONLY AND ARE NOT TO BE CONSTRUED AS INDIVIDUAL PAY/BID ITEMS.

EXISTING BUILDING MASONRY NOTES:

- EXISTING MORTAR AT MASONRY JOINTS TO BE REPOINTED AT CRACKED AND/OR DAMAGED LOCATIONS. EXACT QUANTITY TO BE DETERMINED IN FIELD, AT OWNER WALK THROUGH DURING CONSTRUCTION. FOR PRICING PURPOSES IN BID PROPOSAL, CONTRACTOR TO INCLUDE REPOINTING QUANTITIES NOTED ON THIS SHEET, AND UNIT PRICING PER LINEAL FOOT.
- EXISTING CRACKED AND/OR DAMAGED BRICK UNITS TO BE REMOVED AND REPLACED WITH NEW TO MATCH EXISTING SIZE, COLOR, MODULE AND TEXTURE. EXACT QUANTITY TO BE DETERMINED IN FIELD, AT OWNER WALK THROUGH DURING CONSTRUCTION. FOR PRICING PURPOSES IN BID PROPOSAL, CONTRACTOR TO INCLUDE REPLACEMENT BRICK QUANTITIES NOTED ON THIS SHEET, AND UNIT PRICING PER BRICK. THIS WORK DOES NOT INCLUDE INFILL WORK REQUIRED AT REMOVED OPENINGS OR WHERE NEW CONSTRUCTION TIES INTO EXISTING.

FINISH NOTES:
1. REFER TO SPEC SECTION 09900 FOR PAINTING REQUIREMENTS.
2. DO NOT PAINT FRP, STAINLESS STEEL OR ALUMINUM (U.N.O.).

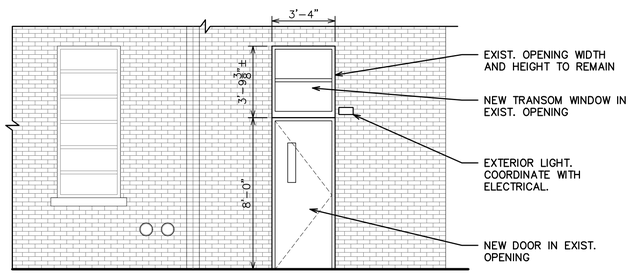

GARAGE SOUTH EXTERIOR ELEVATION
SCALE: 1/4" = 1'-0"

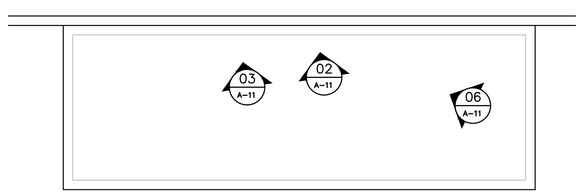

GARAGE ROOF PLAN (FOR REFERENCE PHOTOS)
SCALE: 1/8" = 1'-0"

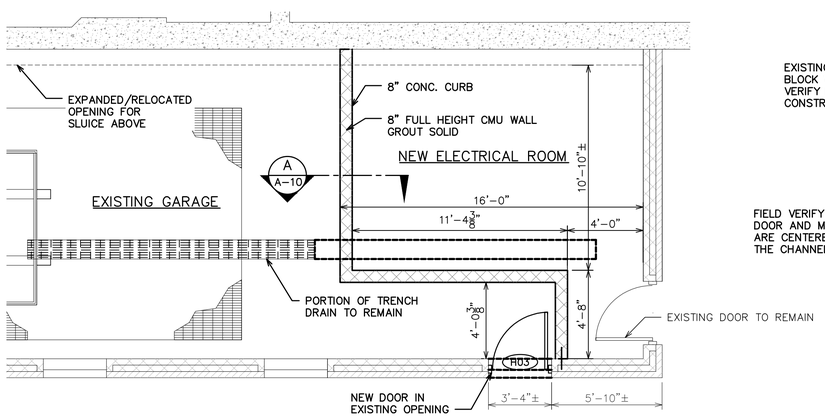

GARAGE FLOOR PLAN
SCALE: 1/4" = 1'-0"

N

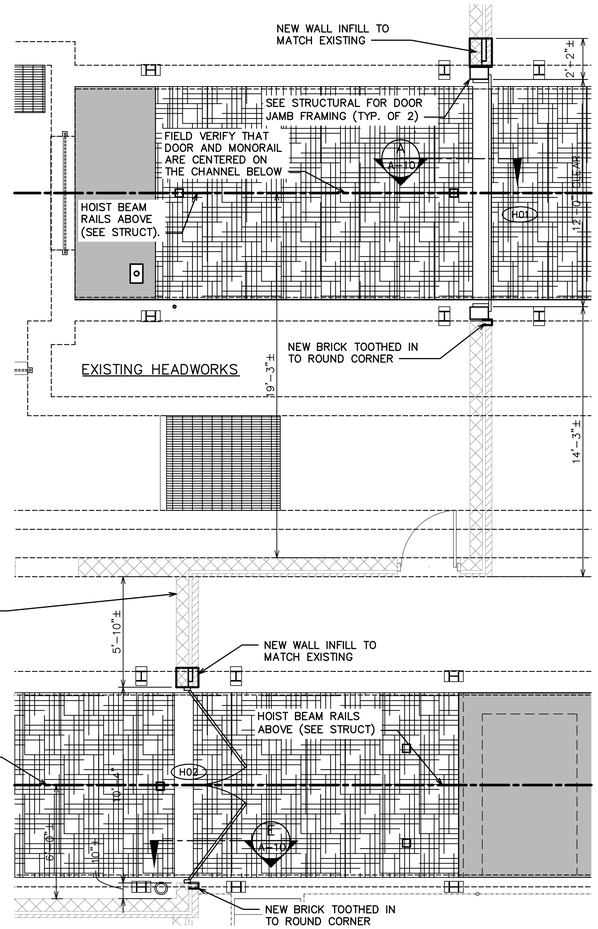

HEADWORKS DOOR MODIFICATION FLOOR PLAN
SCALE: 1/4" = 1'-0"

N

Know what's below. Call before you dig.

REV.	DESCRIPTION	DATE	DRAWN	CHECKED
	ISSUED FOR BIDS SET	12-13-2021		
	90% DESIGN SUBMITTAL	11-22-2021		
	70% DESIGN SUBMITTAL	10-29-2021		
	50% DESIGN SUBMITTAL	10-01-2021		

CITY OF ANN ARBOR
PUBLIC SERVICES
301 EAST HURON STREET
P.O. BOX 8647
ANN ARBOR, MI 48107-8647
734.794.6410
www.a2gov.org

PROJECT MANAGEMENT - PUBLIC SERVICES - CITY OF ANN ARBOR

HEADWORKS IMPROVEMENTS PROJECT

HEADWORKS MODIFICATIONS PLANS AND ELEVATIONS

SCALE AS SHOWN

DRAWING No. 409

SHEET No. A-9

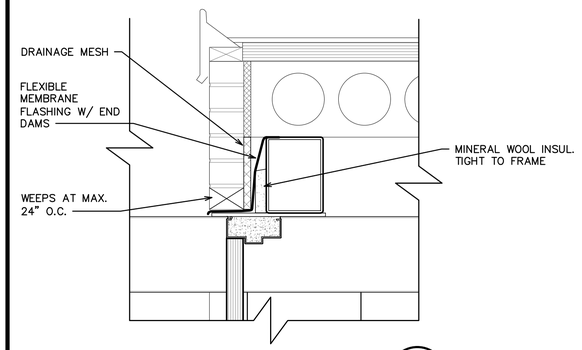

DOOR HEAD DETAIL (H)
SCALE: 1 1/2" = 1'-0"

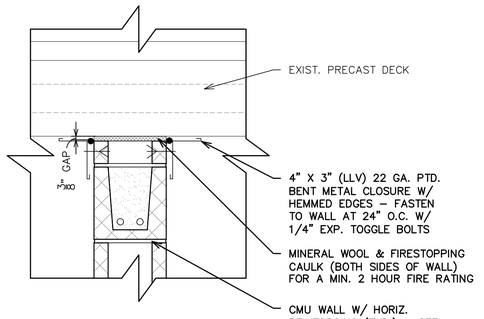

TOP OF INTERIOR WALL AT ELECTRICAL ROOM DETAIL (G)
SCALE: 1 1/2" = 1'-0"

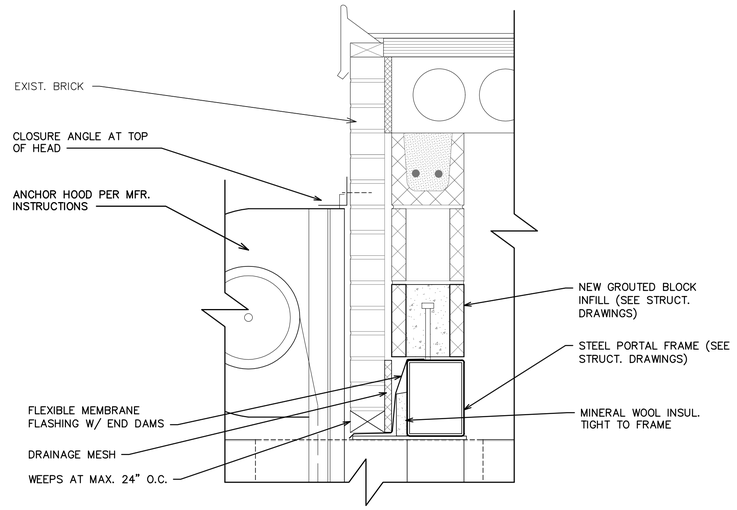

DOOR HEAD DETAIL (D)
SCALE: 1 1/2" = 1'-0"

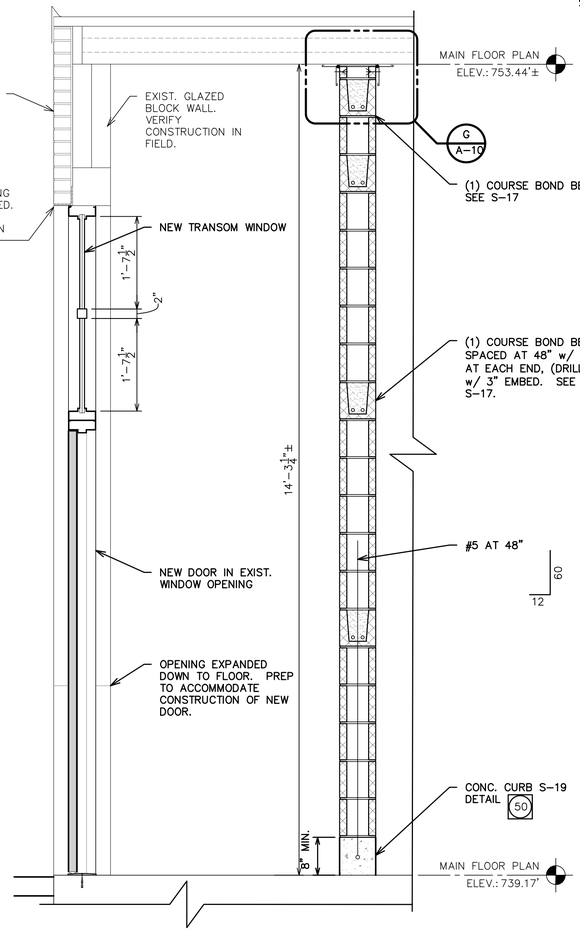

GARAGE SECTION (F)
SCALE: 1 1/2" = 1'-0"

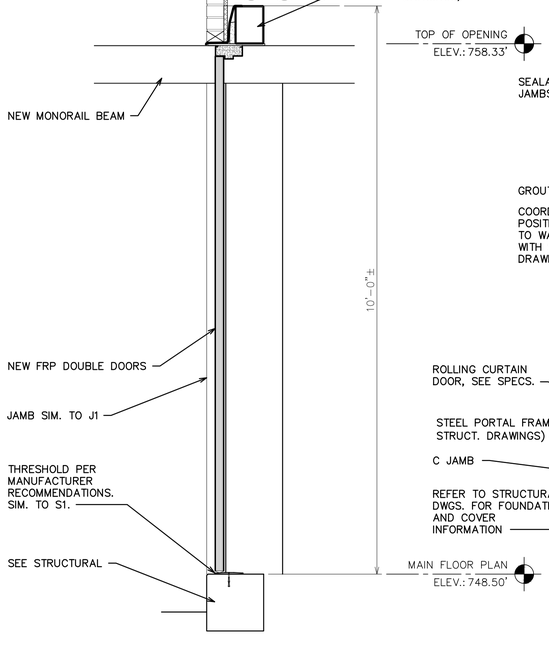

DOOR SECTION (E)
SCALE: 3/4" = 1'-0"

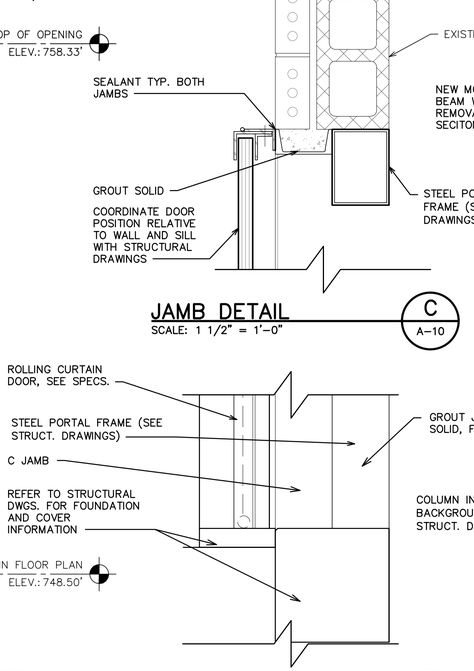

JAMB DETAIL (C)
SCALE: 1 1/2" = 1'-0"

DOOR SILL DETAIL (B)
SCALE: 1 1/2" = 1'-0"

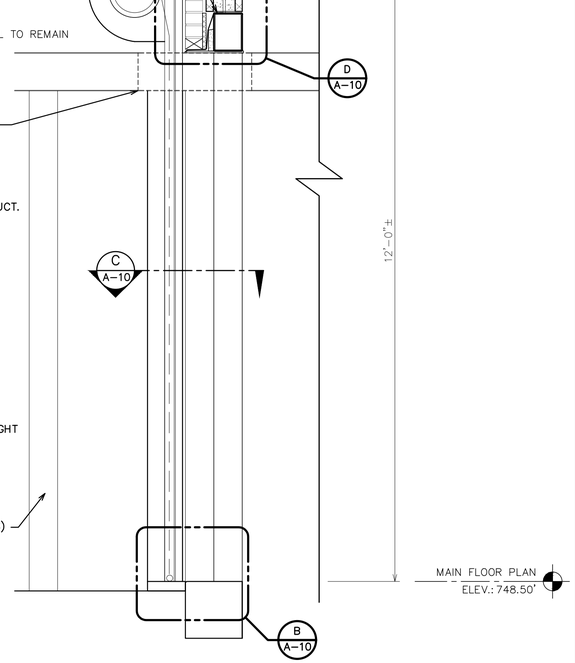

DOOR SECTION (A)
SCALE: 3/4" = 1'-0"

811 Know what's below. Call before you dig.

REV.	DESCRIPTION	DATE	DRAWN	CHECKED
	ISSUED FOR BIDS SET	12-13-2021		
	90% DESIGN SUBMITTAL	11-22-2021		
	70% DESIGN SUBMITTAL	10-29-2021		
	50% DESIGN SUBMITTAL	10-01-2021		

CITY OF ANN ARBOR
PUBLIC SERVICES
301 E. HURON STREET
P.O. BOX 8647
ANN ARBOR, MI 48107-8647
(734) 794-6410
www.a2gov.org

PROJECT MANAGEMENT - PUBLIC SERVICES - CITY OF ANN ARBOR

HEADWORKS IMPROVEMENTS PROJECT

HEADWORKS MODIFICATIONS SECTIONS AND DETAILS

SCALE: AS SHOWN

DRAWING No. 410

SHEET No. A-10



PHOTO 01



PHOTO 02

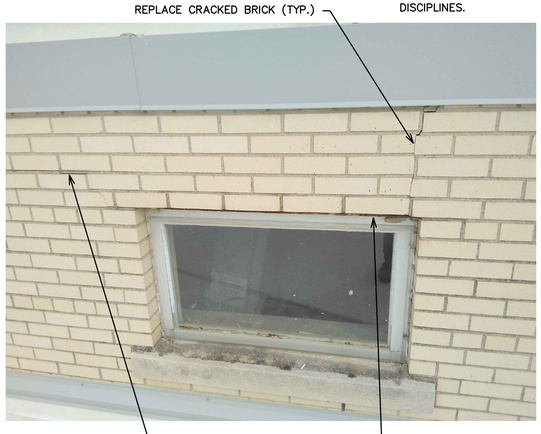

PHOTO 03



PHOTO 04

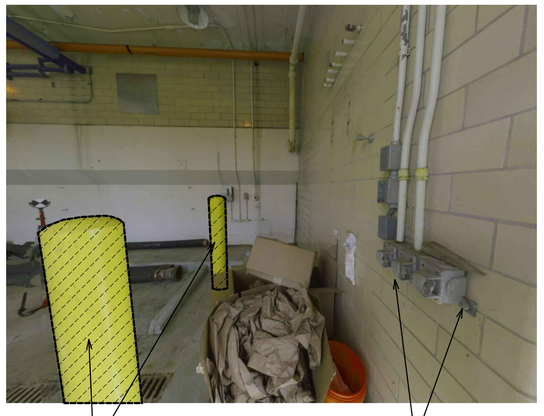

PHOTO 05



PHOTO 06

811 Know what's below. Call before you dig.

REV.	DESCRIPTION	DATE	DRAWN	CHECKED
	ISSUED FOR BIDS SET	12-13-2021		
	90% DESIGN SUBMITTAL	11-22-2021		
	70% DESIGN SUBMITTAL	10-29-2021		
	50% DESIGN SUBMITTAL	10-01-2021		

CITY OF ANN ARBOR
PUBLIC SERVICES
301 E HURON STREET
P.O. BOX 8647
ANN ARBOR, MI 48107-8647
734.794.6410
www.a2gov.org

PROJECT MANAGEMENT - PUBLIC SERVICES - CITY OF ANN ARBOR

HEADWORKS IMPROVEMENTS PROJECT

HEADWORKS MODIFICATIONS REFERENCE PHOTOS

SCALE AS SHOWN

DRAWING No. 411

SHEET No. A-11

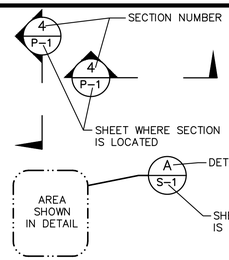

DRAWING, SECTION & DETAIL TITLES

SCALE: 1/4"=1'-0"

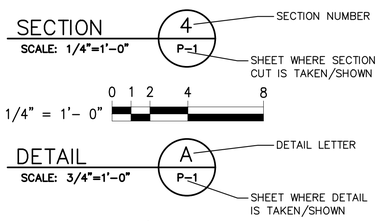

VALVE/GATE OPPERATORS

SYMBOL	TYPE
	HANDWHEEL/LEVER OPERATOR

MISCELLANEOUS

SYMBOL	TYPE
	CENTRIFUGAL PUMP
	ROTARY PUMP
M	MIXER
FC	FLUSHING CONNECTION
	FLOOR DRAIN
	CONNECTION TO EXISTING PIPING
	PULSATION DAMPER
P C	PRESSURE/COMPOUND PRESSURE GAUGES
ST	SAMPLE TAP
SEAL	SEAL WATER, SEE DETAIL
	SLUDGE GRINDER
P	STEM FOR PRESSURE GAUGE

GATE DESIGNATION

SYMBOL	TYPE
	SLUICE GATE/FLUSHMOUNTED
	SLUICE GATE/THIMBLE MOUNTED (E/F)
	SLIDE GATE
	SLIDE PLATE

VALVE DESIGNATIONS

SYMBOLS 6"ø PIPE & LARGER	SYMBOLS 4"ø PIPE & SMALLER	ABBREV.	TYPE
		GV	GATE VALVE
		BV	BALL VALVE
		CV	CHECK VALVE
		PV	PLUG VALVE W/HW OPERATOR
		BFV	BUTTERFLY VALVE
		GLV	GLOBE VALVE
		KV	KNIFE GATE VALVE
			BACKFLOW PREVENTOR
			PRESSURE RELIEF VALVE
			ANGLE VALVE
			3 WAY PLUG VALVE
			PRESSURE REDUCING VALVE

MISCELLANEOUS DESIGNATIONS

6"ø PIPE & LARGER	4"ø PIPE & SMALLER	
		BFC/BOLTED FLEXIBLE COUPLING
		TR-BFC/THRUST RESTRAINED BOLTED FLEXIBLE COUPLING
		GC/GROOVED COUPLING
		UNION
		FC/FLEXIBLE CONNECTION
		TR-FC/THRUST RESTRAINED FLEXIBLE CONNECTION
M	M	FLOW METER
		CONCENTRIC REDUCER
e		ECCENTRIC REDUCER
		BRAIDED METAL FLEX CONNECTION
BF	BF	BF/BLIND FLANGE
		CAP
		DIAPHRAGM-TYPE EXPANSION TANK
		STRAINER

JOINT CONNECTIONS

	FLANGED
	MECHANICAL
	FUSED/SOLVENT
	WELDED

ACTUATORS

E	ELECTRIC
S	SOLENOID
P	PNEUMATIC
H	HYDRAULIC

PROCESS ABBREVIATION

GENERAL

(A)	ABANDONED UTILITY
AFF	ABOVE FINISHED FLOOR
ALUM	ALUMINUM
APPROX	APPROXIMATELY
ARCH	ARCHITECTURAL
ARV	AIR RELEASE VALVE
ASTM	AMERICAN SOCIETY FOR TESTING MATERIALS
BF	BLIND FLANGE
BFP	BELT FILTER PRESS OR BACKFLOW PREVENTOR
BFV	BUTTERFLY VALVE
BOTT	BOTTOM
CMU	CONCRETE MASONRY UNIT
℄	CENTER LINE
CMMS	COMPUTERIZED MAINTENANCE MANAGEMENT SYSTEM
CO	CLEANOUT
CONC	CONCRETE
CONN	CONNECTION
CONT	CONTINUATION
CP	CONTROL PANEL
CPLG	COUPLING
CTR	CENTER
FD	FLOOR DRAIN
HP	HIGH POINT
HW	HANDWHEEL VALVE OPERATOR
HWL	HIGH WATER LEVEL
LP	LOW POINT
LWL	LOW WATER LEVEL
N/O	NORMALLY OPEN
N/C	NORMALLY CLOSED
UNO	UNLESS NOTED OTHERWISE
VFD	VARIABLE FREQUENCY DRIVE
YH	YARD HYDRANT

SERVICE

CA	COMPRESSED AIR
A	PROCESS AIR
CE	CHLORINATED EFFLUENT
CLG	CHLORINE GAS
CLS	CHLORINE SOLUTION
CW	CITY WATER
D	DRAIN
DS	DIGESTED SLUDGE
E	ELECTRICAL CONDUIT
FO	FIBER OPTIC (DIRECT BURY)
FOC	FIBER OPTIC CONDUIT
F	FILTRATE
FC	FLUSHING CONNECTION
GRT	GRIT
IW	INDUSTRIAL WATER
LPA	LOW PRESSURE AIR
ML	MIXED LIQUOR
OF	OVERFLOW
OR	ORGANIC RETURN
PEW	PRESSURIZED EFFLUENT WATER
POL	POLYMER
POS	POLYMER SOLUTION
PS	PRIMARY SLUDGE
PW	POTABLE WATER
RS	RAW SEWAGE
RW	RAW WATER
RAS	RETURN ACTIVATED SLUDGE
RC	RECYCLE
SC	SCUM
SE	SECONDARY EFFLUENT
SN	SUPERNATANT
SPD	SUMP PUMP DISCHARGE
SS	STORED SLUDGE
ST	SAMPLE TAP
STORM	STORM SEWER
TO	THICKENER OVERFLOW
TS	THICKENED SLUDGE
TWAS	THICKENED WASTE ACTIVATED SLUDGE
VT	VENT
WAS	WASTE ACTIVATED SLUDGE
WM	WATER MAIN

PIPE MATERIAL

BS	BLACK STEEL
CI	CAST IRON
CPVC	CHLORINATED POLYVINYL CHLORIDE
CS	CARBON STEEL
CU	COPPER
DI	DUCTILE IRON
GS	GALVANIZED STEEL (HOT DIPPED)
HDPE	HIGH DENSITY POLYETHYLENE
MDPE	MEDIUM DENSITY POLYETHYLENE
PVC 40	POLYVINYL CHLORIDE SCH. 40
PVC 80	POLYVINYL CHLORIDE SCH. 80
SS	STAINLESS STEEL

NOTES:

GENERAL

1. THE EQUIPMENT, PUMPS AND/OR ANCILLARY EQUIPMENT SHOWN ARE GENERALLY REPRESENTATIVE OF A SPECIFIED MANUFACTURER, AND MAY NOT MATCH DIMENSIONS, CONNECTIONS, DIAMETERS, ETC. OF OTHER ACCEPTABLE MFRS. IT IS INCUMBENT UPON CONTRACTORS TO PROVIDE DETAILED LAYOUT SHOP DRAWINGS FOR THE SYSTEM – EQUIPMENT, PUMPS, PIPING SYSTEM, VALVES AND CONNECTIONS – FOR THE PROVIDED EQUIPMENT.
2. NFPA 820 AREA DESIGNATIONS ARE SHOW ON G-02 AND ATMOSPHERIC DESIGNATIONS ARE SHOW ON G-02. THE CONTRACTOR SHALL PROVIDE MATERIALS, ANCHORS, HARDWARE, MOTORS PANELS, ENCLOSURES, ETC. SUITABLE TO THOSE DESIGNATIONS PER SECTION 01600. IT IS INCUMBENT UPON THE GENERAL CONTRACTOR TO COORDINATION THESE REQUIREMENTS WITH SUBCONTRACTORS AND TRADES AT THE TIME OF BID.
3. THE CONTRACTOR SHALL COORDINATE WITH THE OWNER TEMPORARY SHUTDOWN OF PROCESS PIPING, WATER, NATURAL GAS, ELECTRICAL, SCADA, OR ANY OTHER UTILITY. COMPLY WITH THE SHUTDOWN PROCEDURES IN SPECIFICATIONS PER SECTIONS 01650 & 01950.

PIPING AND VALVES

1. PIPE SYSTEM SHOP DRAWINGS ARE REQUIRED TO SHOW PIPE, FITTINGS, REDUCERS, BASE-ELBOWS, VALVES AND VALVE OPERATORS (PRINCIPALLY PLUG VALVE HANDWHEELS AND CHECK VALVES LEVERS), ACTUATORS, SUPPORTS, COUPLINGS, GAUGES, FLUSHING CONNECTIONS, SAMPLE COCKS, PIPE ELEVATIONS, WALL PENETRATIONS, AND CONNECTIONS TO EXISTING PIPE OR EQUIPMENT.
2. CONCRETE PIPE SUPPORT LOCATIONS ARE SHOWN ON THE DRAWINGS, WHEREAS FABRICATED SUPPORTS ARE GENERALLY NOT SHOWN BUT ARE SPECIFIED IN DIVISION 15. THE CONTRACTOR SHALL SHOW ALL PIPE SUPPORTS ON THE PIPE SYSTEM SHOP DRAWINGS.
3. VALVES ARE LOCATED ON THE PLANS & SECTIONS, AND / OR SCHEMATICS, IDENTIFIED ON THE VALVES SCHEDULE, AND SPECIFIED IN SECTION 15100. WHERE CONFLICTS ARISE BETWEEN THE PLANS, & SECTIONS AND VALVE SCHEDULE, THE PLANS & SECTIONS SHALL TAKE PRECEDENCE.
4. VALVES 4 INCHES AND SMALLER WHICH ARE NOT IDENTIFIED ON THE VALVE SCHEDULE, SHALL BE COMPATIBLE WITH THE PIPE AND/OR PROCESS SYSTEM (I.E. COPPER PIPE SHALL HAVE BRASS/BRONZE, STAINLESS STEEL PIPING SHALL HAVE STAINLESS STEEL VALVES, ETC.)
5. WHERE VALVES ARE SHOWN ON THE PROCESS SCHEMATICS AND NOT ON THE PLANS & SECTIONS, THE INSTALLED LOCATIONS SHALL BE COORDINATED WITH THE OWNER/ENGINEER.
6. ALL VALVES 4 INCHES OR LESS SHALL BE PLACED AT AN ACCESSIBLE LOCATION WITH THE OPERATOR EASILY ACCESSIBLE.
7. PAINT ALL NEW WORK IN ACCORDANCE WITH SECTION 09900.

PUMPS AND EQUIPMENT

1. THE AREA AROUND EQUIPMENT SHALL BE ACCESSIBLE FOR OPERATION AND MAINTENANCE. THE CONTRACTOR SHALL NOT INSTALL CONDUIT, SEAL OR FLUSHING WATER, NATURAL GAS PIPING, LIGHTING OR OTHER UTILITIES IN AREAS REQUIRED FOR EQUIPMENT OPERATION, MAINTENANCE OR REPLACEMENT.
2. VICTAULIC, DRESSER OR DISASSEMBLY STYLE COUPLINGS ARE REQUIRED ON THE SUCTION PIPING TO ALL PUMPS AND DIVISION 11 PROCESS EQUIPMENT, FOR EASE OF MAINTENANCE, WHETHER SHOWN ON THE DRAWINGS OR NOT.
3. ANY EQUIPMENT DRAIN PIPING SHALL BE CLEARLY SHOWN THE PIPE SYSTEM SHOP DRAWINGS.
4. PACKING AND SEAL WATER, FLUSHING, OR OTHER WATER SHALL BE PIPED DIRECTLY TO A HUB OUTLET OR FLOOR DRAIN.
5. EQUIPMENT ANCHORS AND HARDWARE SHALL BE IDENTIFIED BY THE EQUIPMENT MANUFACTURER FOR THE INSTALLED CONDITIONS.
6. WHERE PRESSURE GAUGES ARE SHOWN ON THE PROCESS SCHEMATICS, AND NOT ON THE DRAWINGS, THE INSTALLED GAUGE LOCATION SHALL BE COORDINATED WITH OWNER/ENGINEER AND COMPLY WITH THE DETAILS ON THE DRAWINGS AND/OR CALLED FOR IN THE SPECIFICATIONS.
7. GREASE FITTINGS ON EQUIPMENT THAT ARE NOT EASILY ACCESSIBLE SHALL HAVE SS PILOT LINES INSTALLED FOR EASE OF GREASE MAINTENANCE. THE LINES SHALL BE FILLED WITH GREASE AND PURGED OF AIR PRIOR TO FINAL CONNECTION AT EQUIPMENT.
8. GEAR BOXES OR OTHER OIL LUBRICATED EQUIPMENT SHALL BE SUPPLIED WITH SYNTHETIC OIL, AND OIL DRAIN PORTS SHALL BE FITTED WITH PIPING AND STOP-COCK TO DRAIN TO A SPENT OIL CONTAINER.
7. PAINT ALL NEW WORK IN ACCORDANCE WITH SECTION 09900.

ELECTRICAL / I&C / OTHER

1. COORDINATE OR CONFIRM THE INSTALLED LOCATIONS OF DISCONNECTS, PUSH-BUTTON STATIONS, PANELS, FLOW AND LEVEL INDICATORS AND OTHER ELECTRICAL DEVICES WITH THE OWNER PRIOR TO INSTALLATION.
2. WHEN NEW LIGHTING IS REQUIRED, TEMPORARY LIGHTING SHALL BE PROVIDED SUITABLE TO MEET THE OWNER'S OPERATIONAL AND SAFETY NEEDS UNTIL THE NEW LIGHTING IS OPERATIONAL.
3. WHEN THE EXISTING CONTROLS, SCADA SYSTEM OR ALARMS ARE TEMPORARILY DISABLED, THE CONTRACTOR SHALL PROVIDE TEMPORARY I&C ALARMS AND INTERLOCKS.
4. PAINT ALL NEW WORK IN ACCORDANCE WITH SECTION 09900.

VALVE & PIPE IDENTIFICATION

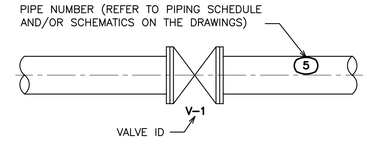

WALL PIPE PENETRATIONS

(SEE DETAILS)

WP E1	EXISTING WALL
WP N1	NEW WALL

PIPE / FITTINGS CONNECTIONS

F x PE FLANGED BY PLAIN END

F x M FLANGED BY MECHANICAL

M x PE MECHANICAL BY PLAIN END

811 Know what's below. Call before you dig.

REV.	DESCRIPTION	DATE	DRAWN	CHECKED
	ISSUED FOR BIDS SET	12-13-2021		
	90% DESIGN SUBMITTAL	11-22-2021		
	70% DESIGN SUBMITTAL	10-29-2021		
	50% DESIGN SUBMITTAL	10-01-2021		

CITY OF ANN ARBOR
PUBLIC SERVICES
301 E. HURON STREET
P.O. BOX 8647
ANN ARBOR, MI 48107-8647
(734) 794-6430
www.a2gov.org

PROJECT MANAGEMENT - PUBLIC SERVICES - CITY OF ANN ARBOR

HEADWORKS IMPROVEMENTS PROJECT

PROCESS LEGEND, NOTES AND ABBREVIATIONS

SCALE: N.T.S.

DRAWING No. 500

SHEET No. P-01

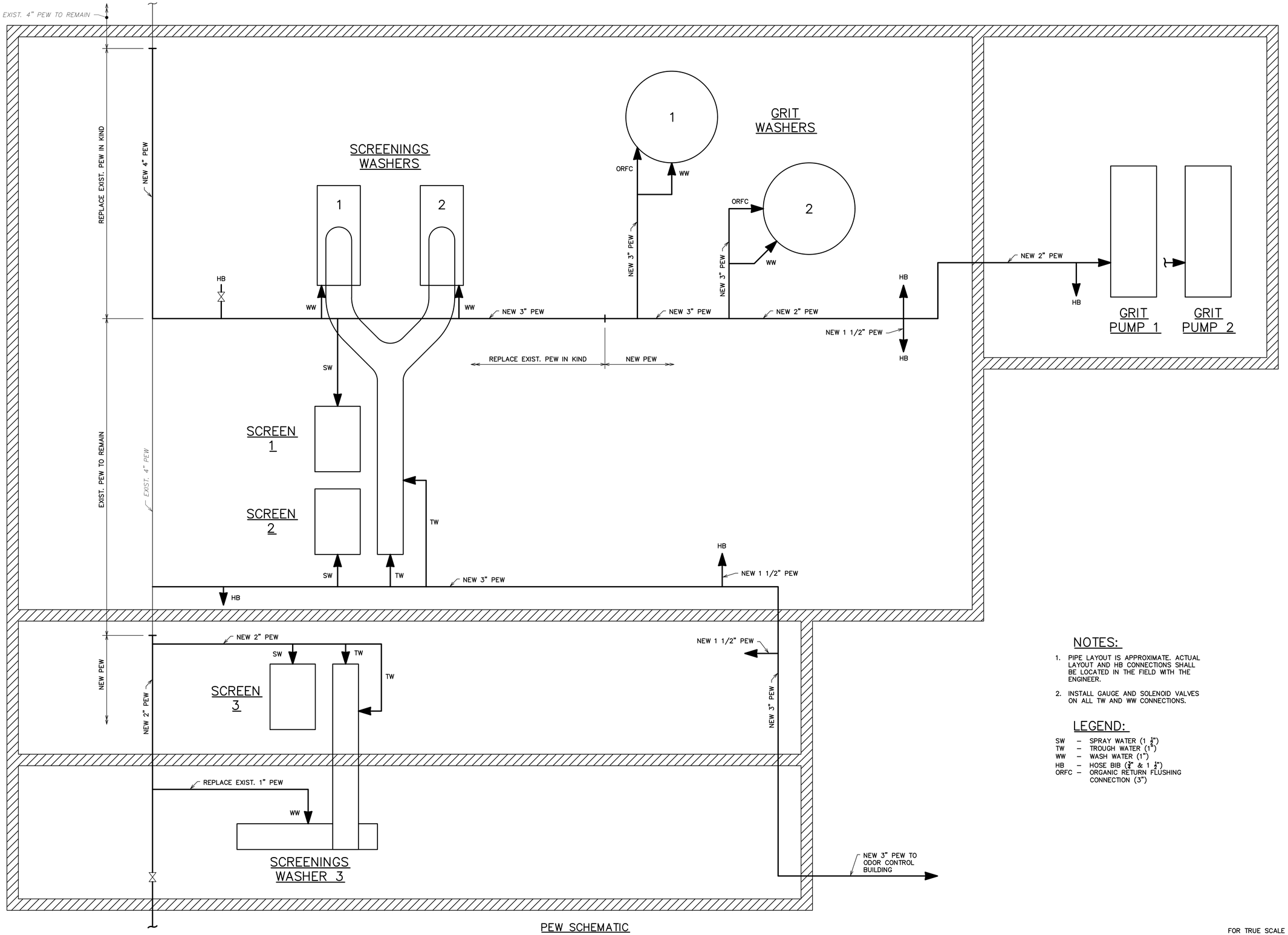

PEW SCHEMATIC
NOT TO SCALE

NOTES:

1. PIPE LAYOUT IS APPROXIMATE. ACTUAL LAYOUT AND HB CONNECTIONS SHALL BE LOCATED IN THE FIELD WITH THE ENGINEER.
2. INSTALL GAUGE AND SOLENOID VALVES ON ALL TW AND WW CONNECTIONS.

LEGEND:

SW – SPRAY WATER (1 ½")
TW – TROUGH WATER (1")
WW – WASH WATER (1")
HB – HOSE BIB (¾" & 1 ½")
ORFC – ORGANIC RETURN FLUSHING CONNECTION (3")

FOR TRUE SCALE PLOT THIS SHEET TO 34" X 22" PAPER SIZE

811 Know what's below. Call before you dig.

REV.	DESCRIPTION	DATE	DRAWN	CHECKED
	ISSUED FOR BIDS SET	12-13-2021		
	90% DESIGN SUBMITTAL	11-22-2021		
	70% DESIGN SUBMITTAL	10-29-2021		
	50% DESIGN SUBMITTAL	10-01-2021		

CITY OF ANN ARBOR
PUBLIC SERVICES
301 EAST HURON STREET
P.O. BOX 8647
ANN ARBOR, MI 48107-8647
734.794-6410
www.a2gov.org

PROJECT MANAGEMENT - PUBLIC SERVICES - CITY OF ANN ARBOR

HEADWORKS IMPROVEMENTS PROJECT

PROCESS FLOW DIAGRAM – PRIMARY EFFLUENT WATER

SCALE N.T.S.

DRAWING No. 502

SHEET No. P-02

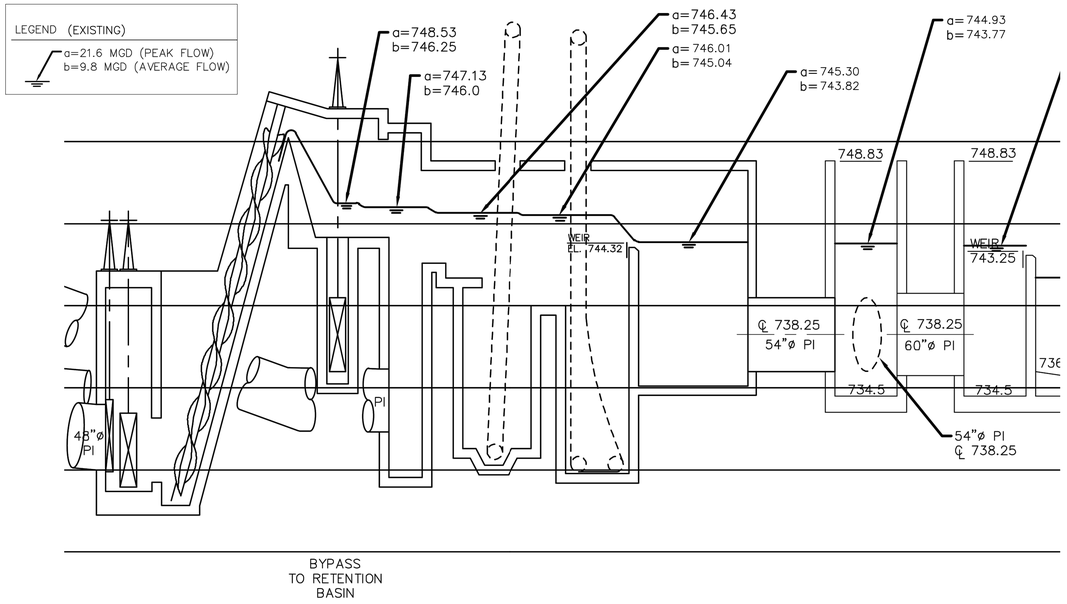

EXISTING PLANT HYDRAULIC GRADE LINE

GENERAL NOTES:

1. HYDRAULIC GRADE LINE DRAWING GENERATED USING SHEET M-00-14 FROM THE ANN ARBOR WWTP 2017 PLANT FACILITIES RENOVATION PROJECT AS BUILT DOCUMENTS AND ASSUMES FLOW THRU THE EAST PLANT TREATMENT FACILITIES WITH THE EXISTING WEIR ELEVATION AND NEW EQUIPMENT.

2. NEW WEIR CONFIGURATIONS FOR EACH CHANNEL CONSISTENT OF THREE WEIR TROUGHS AS DEPICTED ON THE P SHEETS.

3. PROPOSED PLANT HYDRAULIC GRADE LINES ARE DEPICTED FOR BOTH SCREENING MANUFACTURERS, DUPERON (OPTION A) AND HYDRO-DYNE (OPTION B).

4. PROPOSED HYDRAULIC GRADE LINE OPTION A ASSUMES WORSE CASE SCENARIO UTILIZING HYDRAULICS OF THE THE SOUTH SCREENING CHANNEL AND PROPOSED HYDRAULIC GRADE LINE B ASSUMES WORSE CASE SCENARIO UTILIZING HYDRAULICS OF THE NORTH CHANNEL SCREEN.

5. EXISTING OPERATOR FLOOR ELEVATIONS IN THE EXISTING HEADWORKS BUILDING AT 748'-6".

NOTE:

THIS DRAWING HAS BEEN COPIED FROM A PREVIOUS CONSTRUCTION PROJECT AND IS PROVIDED FOR INFORMATION ONLY. THIS DRAWING HAS BEEN REDUCED AND IS THEREFORE NOT TO SCALE. NO GUARANTEE IS MADE, OR SHOULD BE ASSUMED. AS TO THE COMPLETENESS OR ACCURACY OF THE INFORMATION SHOWN ON THIS DRAWING. PARTIES UTILIZING THIS INFORMATION SHALL FIELD VERIFY THE ACCURACY AND COMPLETENESS PRIOR TO CONSTRUCTION ACTIVITIES.

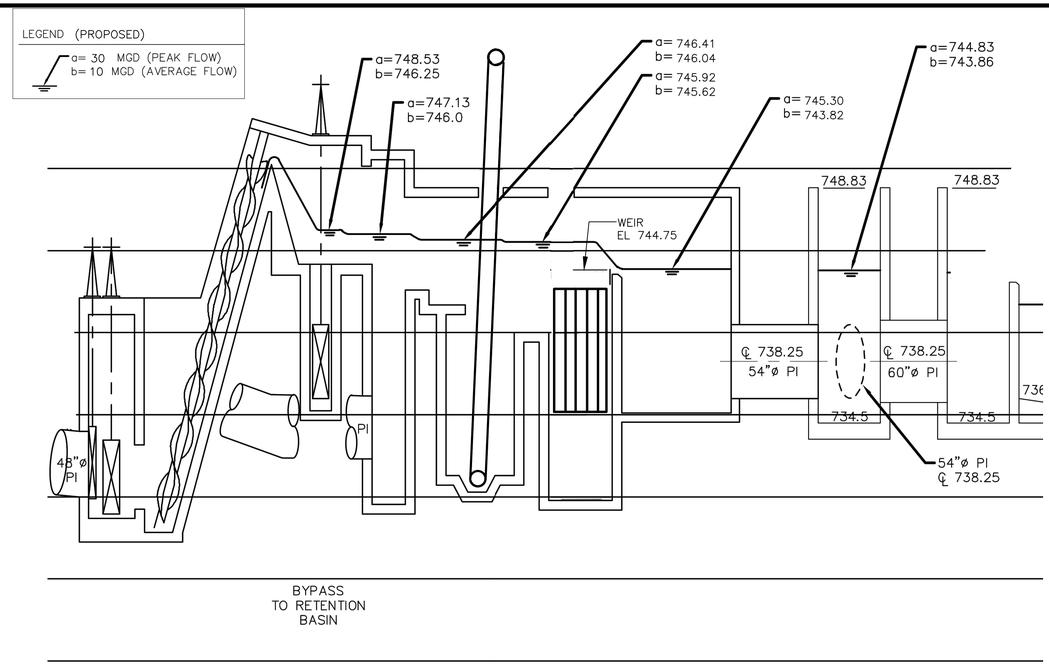

PROPOSED PLANT HYDRAULIC GRADE LINE (A – DUPERON)

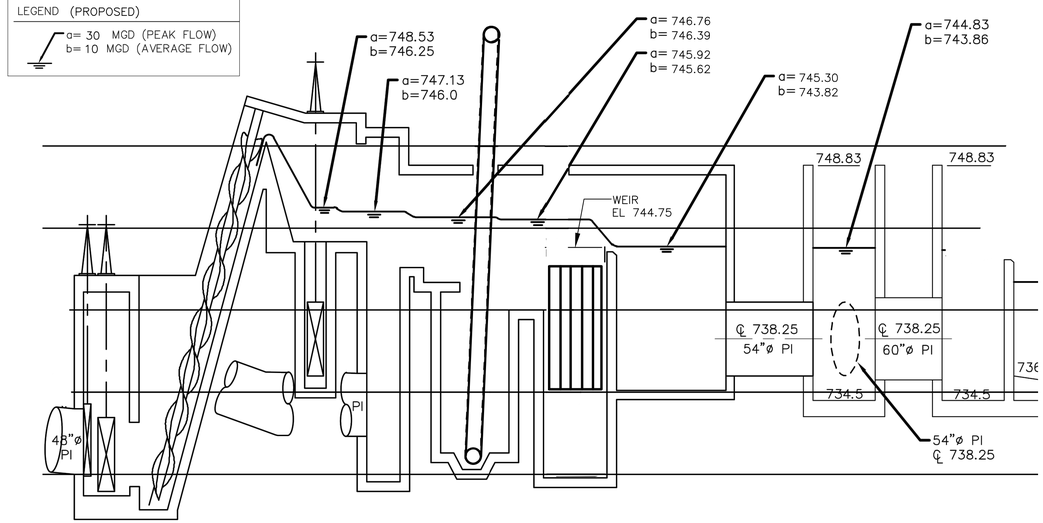

PROPOSED PLANT HYDRAULIC GRADE LINE (B – HYDRO-DYNE)

811 Know what's below. Call before you dig.

REV.	DESCRIPTION	DATE	DRAWN	CHECKED
	ISSUED FOR BIDS SET	12-13-2021		
	90% DESIGN SUBMITTAL	11-22-2021		
	70% DESIGN SUBMITTAL	10-29-2021		
	50% DESIGN SUBMITTAL	10-01-2021		

CITY OF ANN ARBOR
PUBLIC SERVICES
301 EAST HURON STREET
P.O. BOX 8647
ANN ARBOR, MI 48107-8647
734.794.6410
www.a2gov.org

PROJECT MANAGEMENT - PUBLIC SERVICES - CITY OF ANN ARBOR

HEADWORKS IMPROVEMENTS PROJECT

EXISTING AND PROPOSED HYDRAULIC GRADE LINE

SCALE N.T.S.

DRAWING No. 504

SHEET No. P-03

VALVE SCHEDULE

CMMS I.D	VALVE I.D.	DESCRIPTION	SIZE (1)	TYPE (2)		OPERATOR TYPE	ACTUATOR TYPE	LOCATION	SERVICE	NOTES
HEADWORKS:										
		ORGANIC RETURN LINE, GRIT WASHER NO.1	4	BV	TYPE B-3		E	NORTH GARAGE AREA	GRIT WASHING PROCESS	
		PEW FLUSH WATER, GRIT WASHER NO. 1	3	BV	TYPE B-3		E	NORTH GARAGE AREA	GRIT WASHING PROCESS	
		ORGANIC RETURN LINE, GRIT WASHER NO. 2	4	BV	TYPE B-3		E	NORTH GARAGE AREA	GRIT WASHING PROCESS	
		PEW FLUSH WATER, GRIT WASHER NO. 2	3	BV	TYPE B-3		E	NORTH GARAGE AREA	GRIT WASHING PROCESS	
		PEW TRANSPORT WATER, NORTH SCREEN SLUICE	1	SV	TYPE GL-3	L	PI	NORTH SCREENING CHANNEL AREA	SCREENING TRANSPORT	OPTION A (DUPERON)
		PEW TRANSPORT WATER, SOUTH SCREEN SLUICE	1	SV	TYPE GL-3	L	PI	SOUTH SCREENING CHANNEL AREA	SCREENING TRANSPORT	OPTION A (DUPERON)
		PEW WASH WATER, NORTH SCREENING WASHER COMPACTOR NO. 1	1	SV	TYPE GL-3	HW	E	NORTH GARAGE AREA	SCREENINGS WASHING PROCESS	OPTION A (DUPERON)
		PEW WASH WATER, NORTH SCREENING WASHER COMPACTOR NO. 2	1	SV	TYPE GL-3	HW	E	NORTH GARAGE AREA	SCREENINGS WASHING PROCESS	OPTION A (DUPERON)
		PEW WASH WATER, SOUTH SCREENING WASHER COMPACTOR	1	SV	TYPE GL-3	HW	E	SOUTH GARAGE AREA	SCREENINGS WASHING PROCESS	OPTION A (DUPERON)
		PEW SCREEN SPRAY BAR, NORTH SCREEN NO. 1	1.5	SV	TYPE GL-3	L	E	NORTH SCREENING AREA	SCREEN DEBRIS REMOVAL	OPTION B (HYDRO-DYNE)
		PEW SCREEN SPRAY BAR, NORTH SCREEN NO. 2	1.5	SV	TYPE GL-3	L	E	NORTH SCREENING AREA	SCREEN DEBRIS REMOVAL	OPTION B (HYDRO-DYNE)
		PEW SCREEN SPRAY BAR, SOUTH SCREEN	1.5	SV	TYPE GL-3	L	E	SOUTH SCREENING AREA	SCREEN DEBRIS REMOVAL	OPTION B (HYDRO-DYNE)
		PEW TRANSPORT WATER, NORTH SCREEN SLUICE	1	SV	TYPE GL-3	L	PI	NORTH SCREENING CHANNEL AREA	SCREENING TRANSPORT	OPTION B (HYDRO-DYNE)
		PEW TRANSPORT WATER, SOUTH SCREEN SLUICE	1	SV	TYPE GL-3	L	PI	SOUTH SCREENING CHANNEL AREA	SCREENING TRANSPORT	OPTION B (HYDRO-DYNE)
		PEW WASH WATER, NORTH SCREENING WASHER COMPACTOR NO. 1	1	SV	TYPE GL-3	HW	E	NORTH GARAGE AREA	SCREENINGS WASHING PROCESS	OPTION B (HYDRO-DYNE)
		PEW WASH WATER, NORTH SCREENING WASHER COMPACTOR NO. 2	1	SV	TYPE GL-3	HW	E	NORTH GARAGE AREA	SCREENINGS WASHING PROCESS	OPTION B (HYDRO-DYNE)
		PEW WASH WATER, SOUTH SCREENING WASHER COMPACTOR	1	SV	TYPE GL-3	HW	E	SOUTH GARAGE AREA	SCREENINGS WASHING PROCESS	OPTION B (HYDRO-DYNE)

1. MECHANICAL VALVES 3 INCHES AND SMALLER ARE NOT SHOWN ON THIS VALVE SCHEDULE, UNLESS ELECTRICALLY ACTUATED VALVE OR PROCESS SIGNIFICANT

2.SEE SPECIFICATION 15100.

3. CHECK VALVES AND PLUG VALVES FOR GRIT PIPING SHALL BE TYPE C-2 AND TYPE P-1F, RESPECTIVELY, AS SPECIFIED IN SECTION 15100.

VALVE ABBREVIATIONS

VALVE TYPES		OPERATOR TYPES				
KGV	KNIFE GATE VALVE	HW	HANDWHEEL			
MV	MUD VALVE	CW	CHAINWHEEL			
BV	BALL VALVE	L	LEVER			
CV	CHECK VALVE	OLW/S	OUTSIDE LEVER AND WEIGHT/SPRING			
GV	GATE VALVE	L	LEVER			
PV	PLUG VALVE	N	(OPERATING) NUT			
PLV	PLATE VALVE	**ACTUATOR TYPES**				
ARV	AIR RELEASE VALVE	E	ELECTRIC ACTUATOR			
BFV	BUTTERFLY VALVE	EM	ELECTRIC ACT. - MODULATING SERVICE			
GBV	GLOBE VALVE	HYD	HYDRAULIC ACTUATOR			
SV	SOLENDOID VALVE	PNU	PNEUMATIC ACTUATOR			
VALVE ENDS		PI	POSITION INDICATING			
FLG	FLANGE	FS	FLOORSTAND			
MJ	MECHANICAL JOINT	ES	EXTENSION STEM			
NPT	NATIONAL PIPE THREAD	FB	FLOOR BOX			
W	WAFER					

PIPE SCHEDULE

SERVICE	Location	SIZE	MATERIAL	JOINT	TEST PRESSURE	SPECIFICATION SECTION
WASTEWATER, PROCESS DRAIN (PD)	EXPOSED	<4"	PVC, SCHEDULE 80	SOLVENT WELD	SEE SPECIFICATION 15060	15060
WASTEWATER, OVERFLOW (OF) PIPING	EXPOSED	ALL	DIP	GROOVED JOINT / FLANGED AT VALVES & EQUIPMENT	25-PSI	15060
WASTEWATER, ORGANIC RETURN (OR) PIPING	EXPOSED	ALL	DIP	GROOVED JOINT / FLANGED AT VALVES & EQUIPMENT	25-PSI	15060
WASTEWATER, GRIT PIPING	EXPOSED	ALL	DIP, GLASS-LINED	GROOVED JOINT / FLANGED AT VALVES & EQUIPMENT	50-PSI	15060
WASTEWATER, GRIT PIPING	BURIED	ALL	DIP, GLASS-LINED	MJ	50-PSI	02699
SUMP PUMP DISCHARGE (SPD)	EXPOSED	<4"	PVC, SCHEDULE 80	SOLVENT WELD	20-PSI	15060
SUMP PUMP DISCHARGE (SPD)	EXPOSED	> 4", = 4"	DIP	FLANGED	20-PSI	15060
PEW, POTABLE WATER	BURIED	< 3"	COPPER, TYPE K	SEE SPECIFICATION	100-PSI	15060
PEW, POTABLE WATER	BURIED	> 3", = 3"	DIP	MJ	100-PSI	02699
PEW, POTABLE WATER	EXPOSED	< 3"	COPPER, TYPE L	SWEATED	100-PSI	15060
PEW, POTABLE WATER	EXPOSED	> 3", = 3"	DIP	FLANGED	100-PSI	15060
STORM SEWER	BURIED	< 12"	PVC	B&S	SEE SPECIFICATION 15060	02731
STORM SEWER	BURIED	> 12"	RCP	B&S	SEE SPECIFICATION 15060	02731
BUILDING INTERIOR AND BURIED STORM DRAINS	EXPOSED	ALL	CI, PVC	B&S, SOLVENT WELD	SEE SPECIFICATION 15060	15060
NATURAL GAS	EXPOSED	1/2" - 2"	STEEL, PAINTED	SCREWED	SEE SPECIFICATION 15060	15060
BUILDING UNDER DRAIN	EXPOSED	ALL	SEE SPECIFICATION	SEE SPECIFICATION	SEE SPECIFICATION 15060	15060
EXPOSED OUTDOOR DUCT FOR ODOROUS AIR	EXPOSED	ALL	FRP (INSULATED OUTDOORS)	SEE SPECIFICATION	SEE SPECIFICATION 15596	15596, 15599

LEGEND:				NOTES:
B&S	BELL AND SPIGOT	MJ	MECHANICAL JOINT	1. 50% OVER MAX SYSTEM PRESSURE
CI	CAST IRON	NA	NOT APPLICABLE	
CL.	CLASS	POJ	PUSH ON JOINT	
DIP	DUCTILE IRON PIPE	PVC	POLY VINYL CHLORIDE	
DWV	DRAIN/WASTE/VENT	RCP	REINFORCED CONCRETE PIPE	
HDD	HORIZONTAL DIRECTIONAL DRILLING	RCSP	REINFORCED CONCRETE SEWER PIPE	
HDPE	HIGH DENSITY POLYETHYLENE	SCH	SCHEDULE	
MDPE	MEDIUM DENSITY POLYETHYLENE	SDR	STANDARD DIMENSIONAL RATIO	

811 Know what's below. Call before you dig.

REV.	DESCRIPTION	DATE	DRAWN	CHECKED
	ISSUED FOR BIDS SET	12-13-2021		
	90% DESIGN SUBMITTAL	11-22-2021		
	70% DESIGN SUBMITTAL	10-29-2021		
	50% DESIGN SUBMITTAL	10-01-2021		

CITY OF ANN ARBOR
PUBLIC SERVICES
301 EAST HURON STREET
P.O. BOX 8647
ANN ARBOR, MI 48107-8647
734.794.6410
www.a2gov.org

PROJECT MANAGEMENT - PUBLIC SERVICES - CITY OF ANN ARBOR

HEADWORKS IMPROVEMENTS PROJECT

PUMP, VALVE, AND PIPE SCHEDULES

SCALE N.T.S.

DRAWING No. 506

SHEET No. P-04

GATE SCHEDULE

CMMS I.D	MANUFACTURER	SIZE	FRAME	MOUNT	S. HEAD*	US. HEAD	OPER. / ACT.	LOCATION	SERVICE	NOTES
S-5-1				S					WASTEWATER	
S-5-2				S					WASTEWATER	
S-6-1	WATERMAN	60" X 66"	3EP	S			HW / E	EFFLUENT CHANNEL EXIT PIPE	WASTEWATER	
S-6-2	WATERMAN	60" X 66"	3EP	S			HW / E	EFFLUENT CHANNEL EXIT PIPE	WASTEWATER	
S-7-1	WATERMAN	96" X 72"	3EP	S			HW	ALCOVE EXIT	WASTEWATER	
F-1-2	WATERMAN	96" X 78"	3EP	F			HW / E	EFFLUENT CHANNEL	WASTEWATER	
F-1-3	WATERMAN	96" X 78"	3EP	F			HW	EFFLUENT CHANNEL	WASTEWATER	
F-2-1	WATERMAN	96" X 72"	3EP	F			HW	SOUTH CHANNEL EXIT	WASTEWATER	
F-3-1	WATERMAN	72" X 84"	3EP	F			HW / E	NORTH GRIT CHAMBER ENTRANCE	WASTEWATER	
F-4-1	WATERMAN	60" X 78"	3EP	F			HW	NORTH SCREENING CHANNEL ENTRANCE	WASTEWATER	
F-4-2	WATERMAN	60" X 78"	3EP	F			HW	NORTH SCREENING CHANNEL ENTRANCE	WASTEWATER	
F-5-1	WATERMAN	54" X 78"	3EP	F			HW / E	NORTH SCREENING CHANNEL SCREEN 1 INFLUENT	WASTEWATER	
F-5-2	WATERMAN	54" X 78"	3EP	F			HW / E	NORTH SCREENING CHANNEL SCREEN 2 INFLUENT	WASTEWATER	
F-5-3	WATERMAN	54" X 84"	3EP	F			HW	NORTH SCREENING CHANNEL SCREEN 1 EFFLUENT	WASTEWATER	
F-5-4	WATERMAN	54" X 84"	3EP	F			HW	NORTH SCREENING CHANNEL SCREEN 2 EFFLUENT	WASTEWATER	
F-6-1	WATERMAN	60" X 72"	3EP	F			HW / E	EMERGENCY BYPASS CHANNEL ENTRANCE	WASTEWATER	
F-6-2	WATERMAN	60" X 72"	3EP	F			HW / E	EMERGENCY BYPASS CHANNEL BAR RACK EFFLUENT	WASTEWATER	
F-6-3	WATERMAN		3EP	F			HW / E	NORTH AND SOUTH CHANNEL CROSS CONNECTION	WASTEWATER	
F-6-4	WATERMAN		3EP	F			HW / E	NORTH AND SOUTH CHANNEL CROSS CONNECTION	WASTEWATER	
F-7-1	WATERMAN	60" X 66"	3EP	F			HW / E	EMERGENCY BYPASS CHANNEL EXIT	WASTEWATER	
F-8-1	WATERMAN		3EP	F			HW / E	SOUTH SCREENING CHANNEL ENTRANCE	WASTEWATER	
F-8-2	WATERMAN		3EP	F			HW / E	SOUTH SCREENING CHANNEL ENTRANCE	WASTEWATER	
F-8-3	WATERMAN		3EP	F			HW	SOUTH SCREENING CHANNEL EXIT	WASTEWATER	
F-8-4	WATERMAN		3EP	F			HW	SOUTH SCREENING CHANNEL EXIT	WASTEWATER	
F-8-5	WATERMAN	72" X 84"	3EP	F			HW	SOUTH GRIT CHAMBER ENTRANCE	WASTEWATER	
F-8-6	WATERMAN		3EP	F			HW / ES	SOUTH GRIT CHANNEL BYPASS	WASTEWATER	
R-1-1	WATERMAN	48" X 48"	3EP	R			HW / ES	INFLUENT CHANNEL	WASTEWATER	
R-1-2	WATERMAN		3EP	R			HW	INFLUENT CHANNEL	WASTEWATER	
R-2-1	WATERMAN		3EP	R			HW	INFLUENT CHANNEL / EMERGENCY BYPASS CHANNEL	WASTEWATER	
R-3-1	WATERMAN	24" X 24"	3EP	R			HW / ES	INFLUENT CHANNEL	WASTEWATER	
R-9-1	WATERMAN		3EP	R			HW	SOUTH CHANNEL BYPASS EXIT	WASTEWATER	
						* SEATING AND UNSEATING HEAD				

GATE ABBREVIATIONS			
FRAME		OPERATOR TYPES	
O	OPEN	HW	HANDWHEEL
SC	SELF CONTAINED	C	CRANK
DS	DUAL STEM	N	(OPERATING) NUT
MOUNT TYPES		ACTUATOR TYPES	
T	THIMBLE	E	ELECTRIC ACTUATOR
S	SURFACE	EM	ELECTRIC ACTUATOR – MODULATING SERVICE
E	EMBEDDED	HYD	HYDRAULIC ACTUATOR
F	FLUSH	PNU	PNEUMATIC ACTUATOR
WM	WALL MOUNTED	PI	POSITION INDICATING
R	REAR MOUNTED	FS	FLOORSTAND
		ES	EXTENSION STEM

811 Know what's **below.** **Call** before you dig.

REV.	DESCRIPTION	DATE	DRAWN	CHECKED
	ISSUED FOR BIDS SET	12-13-2021		
	90% DESIGN SUBMITTAL	11-22-2021		
	70% DESIGN SUBMITTAL	10-29-2021		
	50% DESIGN SUBMITTAL	10-01-2021		

CITY OF ANN ARBOR
PUBLIC SERVICES
301 EAST HURON STREET
P.O. BOX 8647
ANN ARBOR, MI 48107-8647
734.794.6410
www.a2gov.org

PROJECT MANAGEMENT - PUBLIC SERVICES - CITY OF ANN ARBOR

HEADWORKS IMPROVEMENTS PROJECT

GATE SCHEDULES

SCALE N.T.S.

DRAWING No. 508

SHEET No. P-5

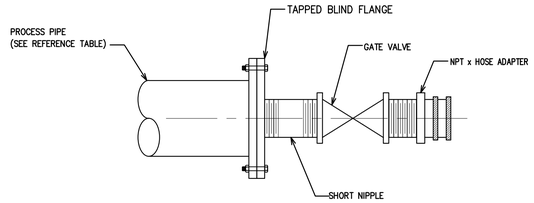

SIZING REFERENCE TABLE:

PROCESS PIPE DIA	F.C. DIA
≤ 6"	1"
≥ 8"	2"

STANDARD FLUSHING CONNECTIONS (F.C.)

NO SCALE

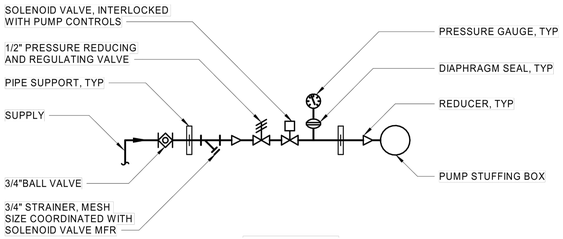

NOTES:

1. PIPE SHALL BE COPPER, PER 15060.
2. BALL VALVES SHALL BE, COPPER, 2 PIECES PER 15100.
3. PRV SHALL BE LF-123-LP 3/4, BY WATTS.
4. WYE STRAINER SHALL BE SERIES 777 SI BRONZE, 304 SS MESH LINER.
5. SIGHT TUBE SHALL BE MODEL SFI-100 BY DWYER INSTRUMENTS, OR BRONZE FITTINGS SERIES 7200 BY KING INSTRUMENTS OR EQUAL. COORDINATE FLOW CAPACITY WITH PUMP OR SEAL MFR.
6. PRESSURE GAUGE PER THE STANDARD DETAIL, TRERICE 450LFSS OR SERIES 1279 BY ASHCROFT.
7. MOUNT SEAL WATER SYSTEM TO 304 SS RACK, LOCATED TO PROVIDE ADEQUATE MAINTENANCE ACCESS.

SEAL WATER DETAIL

NO SCALE

SW-1

CONDITION	TYPE	CONSTRUCTION	GRADE
NOTES	N/A	N/A	N/A

NOTES:

1. COORDINATE ALL CORES WITH ℄ ELEV., PIPE O.D. & *SCL THICKNESS. CORE OPENING PER SECTION 01045.
2. HARDWARE AND SLEEVE MATERIALS SHALL BE COMPATIBLE TO THE TO THE ENVIRONMENT, PER SECTION 15000.
3. WHEREVER POSSIBLE, PLACE SEALS TO TIGHTEN FROM BUILDING INTERIOR. TIGHTEN *SCL SEQUENTIALLY, PER MANUFACTURER'S RECOMMENDATIONS.

*SCL – SEGMENTED COMPRESSIBLE LINKS

ANNULAR SPACE NOTES:

1. ANNULAR RING INSIDE BUILDINGS SHALL BE FINISHED TO MATCH INTERIOR WALLS, CEILING OR SLAB. (PAINT WHEN SURFACE IS PAINTED OR ESCUTCHEON PLATE WHERE SURFACE IS TILED.)
2. FOR MASONRY WALLS, CAULK AND PAINT ANNULAR SPACE WHEN MASONRY IS PAINTED. (MATCH COLOR PAINT). OTHERWISE GROUT.
3. FOR CONCRETE WALLS, CAULK & PAINT TO MATCH NATURAL CONCRETE. FOR CONCRETE WALLS IN WET WELLS OR PIPE GALLERIES, NO ANNULAR SPACE TREATMENT IS REQUIRED.
4. WHEN WALL IS TILED, PROVIDE ESCUTCHEON PLATE SUITABLE TO ENGINEER OR OWNER.

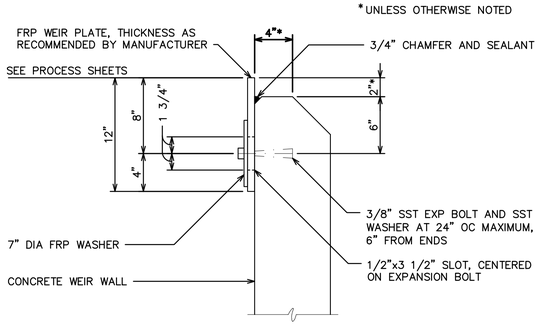

WEIR PLATE

NO SCALE

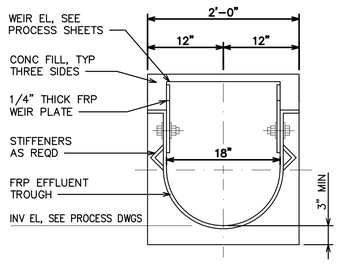

GRIT TANK EFFLUENT TROUGH

NO SCALE

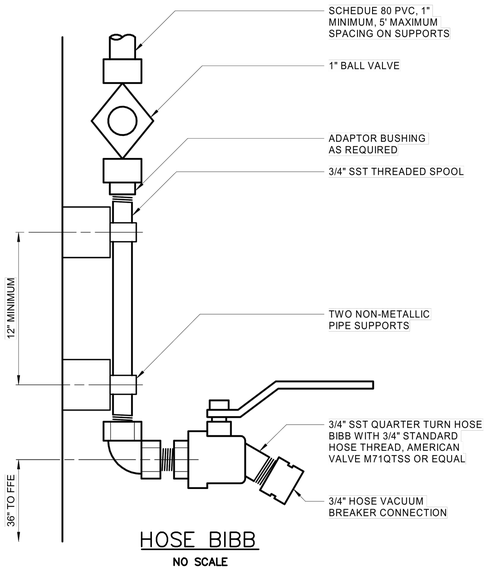

HOSE BIBB

NO SCALE

CONDITION	TYPE	CONSTRUCTION	GRADE
NEW	EXTERIOR TANK/WALL	CONCRETE	BELOW GRADE

WP N1

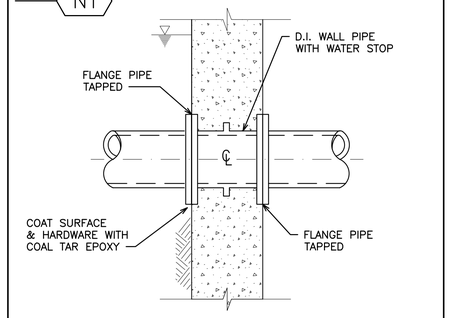

FxF WALL PIPE CAST IN TANK WALL

NO SCALE

CONDITION	TYPE	CONSTRUCTION	GRADE
EXISTING	EXTERIOR WALL/TANK	CONCRETE	BELOW GRADE

WP E1

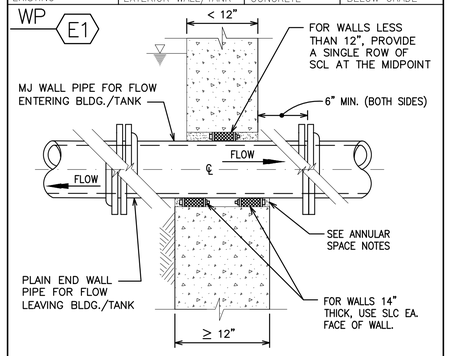

PIPE THROUGH EXTERIOR WALL/TANK

NO SCALE

CONDITION	TYPE	CONSTRUCTION	GRADE
EXISTING	INTERIOR WALL	BLOCK	ABOVE GRADE

WP E9

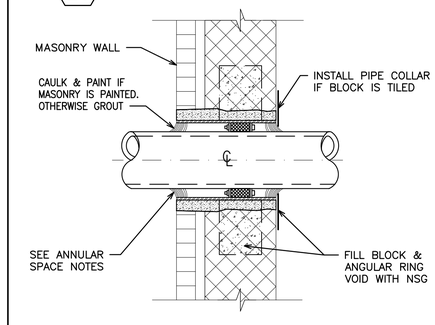

PIPE SLEEVE THROUGH BLOCK WALL

NO SCALE

CONDITION	TYPE	CONSTRUCTION	GRADE
EXISTING	INTERIOR WALL	CONCRETE	N/A

WP E3

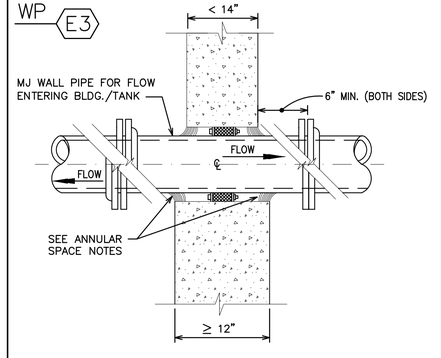

PIPE THROUGH INTERIOR WALL

NO SCALE

Know what's below. Call before you dig. 811

REV.	DESCRIPTION	DATE	DRAWN	CHECKED
	ISSUED FOR BIDS SET	12-13-2021		
	90% DESIGN SUBMITTAL	11-22-2021		
	70% DESIGN SUBMITTAL	10-29-2021		
	50% DESIGN SUBMITTAL	10-01-2021		

CITY OF ANN ARBOR
PUBLIC SERVICES
301 E. HURON STREET
P.O. BOX 8647
ANN ARBOR, MI 48107-8647
(734) 794-6430
www.a2gov.org

PROJECT MANAGEMENT - PUBLIC SERVICES - CITY OF ANN ARBOR

HEADWORKS IMPROVEMENTS PROJECT

PROCESS MISCELLANIOUS DETAILS - I

SCALE N.T.S.

DRAWING No. 510

SHEET No. P-06

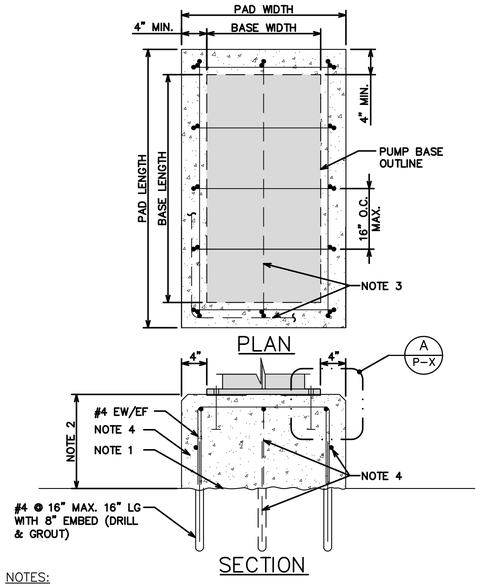

NOTES:

1. REMOVE OILS OR GREASE. SCARIFY WITH BUSH HAMMER.
2. PUMP PAD HEIGHT IS DEPENDENT UPON PUMP SUCTION & DISCHARGE NOZZLE CENTER LINE ELEVATIONS, GROUT PAD, & PIPE ELEVATIONS. CONTRACTOR TO COORDINATE WITH SUBMITTALS.
3. THE ADDITIONAL HORIZONTAL EDGE BAR IS REQUIRED FOR PADS OVER 16" HIGH. THE ADDITIONAL CENTER BAR & ANCHOR IS REQUIRED FOR PADS OVER 24" WIDE.
4. CONCRETE SHALL BE 3500 PSI CONCRETE, GROUT & REINFORCING STEEL SHALL MEET DIV. 03 SPECIFICATIONS. PUMPS SHALL NOT START UNTIL GROUT HAS CURED.

CONCRETE PUMP PEDESTAL DETAIL

NO SCALE

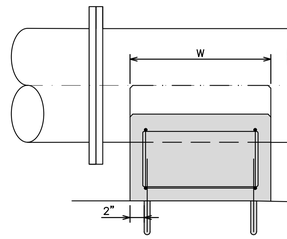

PIPE SIZE	W
12"& LARGER	1'-2"
SMALLER THAN 12"	8"

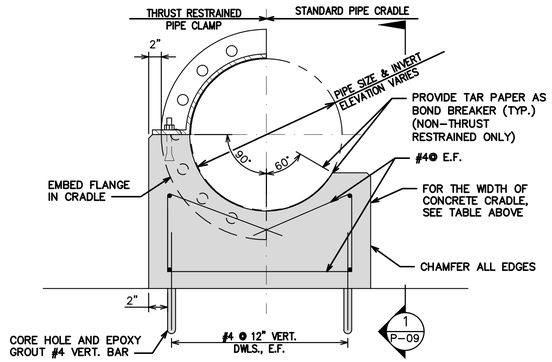

CONCRETE PIPE CRADLE

N.T.S.

NOTES:

1. PROVIDE STANDARD PIPE CRADLE UNLESS NOTED OTHERWISE.
2. PROVIDE PIPE CLAMP CRADLE FOR ALL BUOYANCY CONDITIONS, OR WHERE SHOWN ON THE DRAWINGS.
3. PROVIDE THRUST RESTRAINED CRADLE WHERE SHOWN ON THE DRAWINGS.

ANCHOR BOLT TYPE

DIAMETER OF BOLT	TENSILE STRENGTH, LB. f_s = 20,000 P.S.I.	WASHER, BASE PLATE, GROUT, 1.5d (MIN.) FOR PLATE & STRUCT. STL.	1	2	3	4	5
			SUPPORT, STANDARD WASHER	STANDARD WASHER	SPOTWELD, PLATE WASHER	SPOTWELD	PLASTIC SLEEVE

d, in.	BASED UPON 80 P.S.I. BOND	METAL PIPE SLEEVE LENGTH b ≅ 10d	METAL PIPE SLEEVE NPS[3] c ≅ 2d	PLASTIC SLEEVE LENGTH b	PLASTIC SLEEVE NPS[3] c = in.	LENGTH OF BOLT IN CONC., in. e	SIZE OF PLATE WASHER in.	MIN. EDGE DISTANCE, IN f
1/2	1500	6"	1 1/2	5"	2	9"	4X4X1/2	7"
5/8	2425	7"	2	7"	2	1'-0"	4X4X1/2	7"
3/4	3600	8"	2	7"	2	1'-3"	4X4X1/2	7"
7/8	5040	9"	2 1/2	7"	2	1'-6"	6X6X3/4	8"
1	6600	10"	3	10"	3	1'-9"	6X6X3/4	8"
1 1/8	8320	1'-0"	3	10"	3	2'-0"	6X6X3/4	8"
1 1/4	10630	1'-1"	3	10"	3	2'-2"	7X7X1	8"
1 3/8	12660	1'-2"	3	1'-3"	4	2'-4"	7X7X1	8"
1 1/2	15500	1'-3"	3	1'-3"	4	2'-6"	8X8X1 1/4	8"
1 5/8	18360	1'-5"	4	1'-3"	4	2'-8"	8X8X1 1/4	9"
1 3/4	20950	1'-6"	4	1'-3"	4	2'-9"	9X9X1 1/2	9"
1 7/8	24600	1'-6"	4	1'-6"	4	2'-10"	9X9X1 1/2	10"
2	27600	1'-8"	4	1'-6"	4	3'-0"	11X11X1 3/4	10"
2 1/4	36300	1'-11"	6	1'-6"	4	3'-3"	11X11X1 3/4	12"
2 1/2	44600	2'-1"	6	2'-0"	6	3'-6"	11X11X1 3/4	13"
2 3/4	55400	2'-4"	6	2'-0"	6	3'-9"	12X12X2	14"
3	65280	2'-6"	6	2'-0"	6	4'-0"	12X12X2	15"

EQUIPMENT ANCHOR BOLT NOTES:

1. ANCHOR BOLT DESIGN PRESENTED IN HERE IS APPLICABLE TO THE ANCHORAGE OF MECHANICAL AND PROCESS EQUIPMENT AS SPECIFIED ON THE DRAWINGS, UNLESS ANCHORAGE DESIGN IS SUPPLIED BY THE EQUIPMENT MANUFACTURER.
2. ANCHORS SHALL BE EMBEDDED INTO CONCRETE WITH A MINIMUM SPECIFIED COMPRESSIVE STRENGTH (fc) OF 3,500 psi.
3. METAL PIPE SLEEVE'S SHALL "STD" IN SIZE OR SMALLER.
4. REFER TO STRUCTURAL NOTES FOR ANCHOR BOLT MATERIAL REQUIREMENTS.
5. PLATE WASHER SHALL BE SAME MATERIAL TYPE AS ANCHOR BOLT.

STANDARD EQUIPMENT ANCHOR BOLT TYPES

NO SCALE

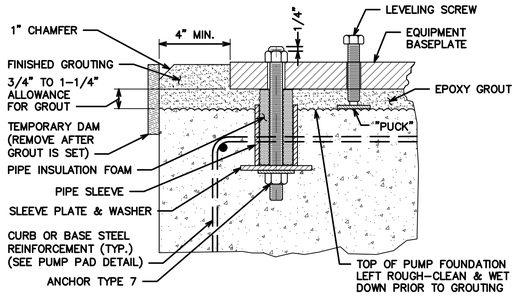

NOTES:

1. ANCHOR BOLT SIZE SHALL BE PROVIDED BY THE PUMP MFR. AND SHALL MATCH TYPE INDICATED. SEE ANCHOR BOLT SCHEDULE FOR DETAILS.
2. LEVEL PUMP FRONT TO BACK, THEN SIDE TO SIDE.
3. ALL HARDWARE SHALL BE 316 S.S. UNLESS OTHERWISE NOTED.
4. EPOXY GROUT SHALL BE ..... MIX AND PLACE IN ACCORDANCE WITH MFR. RECOMMENDATIONS.
5. AFTER GROUT SETS, REMOVE LEVELING SCREWS AND TORQUE ANCHOR BOLTS.

NEW PUMP BASE PLATE ANCHOR DETAIL

A
P-X

NO SCALE

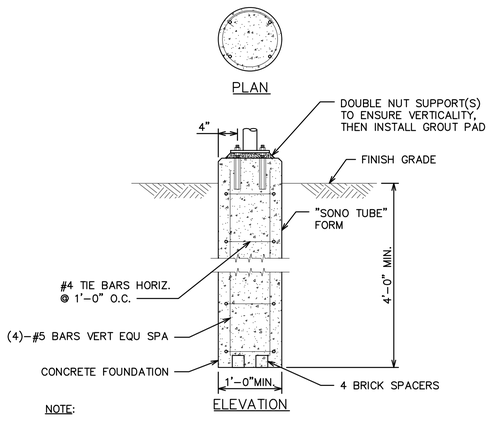

NOTE:

1. THE TOP OF THE SUPPORT FOUNDATION NEEDS TO BE COORDINATED WITH THE EQUIPMENT OR PIPE SUPPORT REQUIREMENTS SHOW ELSEWHERE ON THE DRAWINGS. FOUNDATION DIAMETERS ARE INDICATED ON EQUIPMENT DRAWINGS.
2. THE FOUNDATION DIAMETER IS DRIVEN BY THE REQUIREMENT FOR THE ANCHOR BOLT MINIMUM DIMENSION OFF THE EDGE OF CONCRETE, AND THE DIMENSIONS OF THE EQUIPMENT BASEPLATE.

SUPPORT FOUNDATION SF-01

NO SCALE

Know what's below. Call before you dig. 811

REV.	DESCRIPTION	DATE	DRAWN	CHECKED
	ISSUED FOR BIDS SET	12-13-2021		
	90% DESIGN SUBMITTAL	11-22-2021		
	70% DESIGN SUBMITTAL	10-29-2021		
	50% DESIGN SUBMITTAL	10-01-2021		

CITY OF ANN ARBOR
PUBLIC SERVICES
301 EAST HURON STREET
P.O. BOX 8647
ANN ARBOR, MI 48107-8647
734.794.6410
www.a2gov.org

PROJECT MANAGEMENT - PUBLIC SERVICES - CITY OF ANN ARBOR

HEADWORKS IMPROVEMENTS PROJECT

PROCESS MISCELLANIOUS DETAILS - II

SCALE N.T.S.

DRAWING No. 512

SHEET No.

P-07

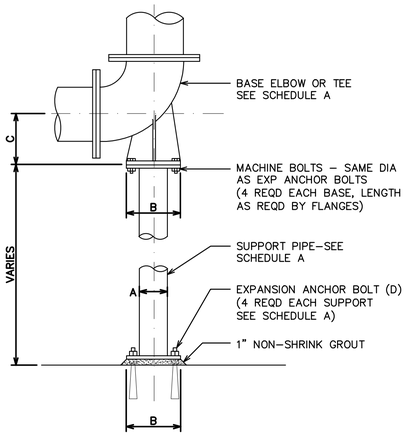

BASE ELBOW (TEE)

NO SCALE

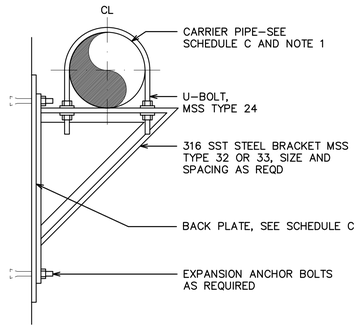

PIPE SUPPORT BRACKET

NO SCALE

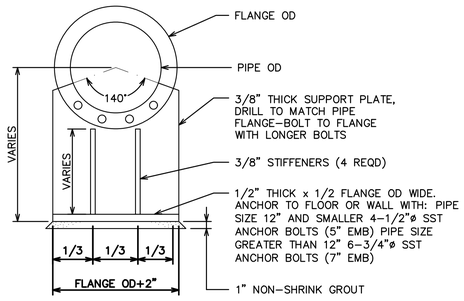

FABRICATED PIPE SUPPORT (AT FLANGE)

NO SCALE

SCHEDULE A

BASE ELBOW (TEE) (DIM IN INCHES)

PIPE SIZE	A	B	C	D DIA x LG
3	1 1/2	5	4 7/8	1/2 x 5
4	2	6	5 1/2	5/8 x 5
5–6	2 1/2	7	VARIES	5/8 x 5
8–10	4	9	VARIES	5/8 x 5
12–16	6	11	VARIES	3/4 x 6
18–24	8	13 1/2	VARIES	3/4 x 6
30	10	16	23	7/8 x 7
36	12	19	26	7/8 x 7

SCHEDULE B

ADJUSTABLE SADDLE (DIM IN INCHES)

PIPE SIZE	A	B	C	D DIA x LG
3	2 1/2	7	1 1/2	5/8 x 5
4–12	3	7 1/2	2 1/2	5/8 x 5
14–16	4	9	3	5/8 x 5
18–20	6	11	3 1/2	3/4 x 6
24–48	6	11	4	3/4 x 6

NOTES:

1. CONTRACTOR SHALL DESIGN THE SUPPORT SYSTEMS BASED ON ACTUAL WEIGHTS AND CONDITIONS AS SPECIFIED OR AS SHOWN ON THE CONTRACT DRAWINGS. PIPE HANGERS, SUPPORTS AND BRACKETS SHOWN HERE IN VARIOUS COMBINATIONS REPRESENT MINIMUM REQUIREMENTS FOR ACCEPTABLE SUPPORTS AS TO TYPES, MATERIALS, THICKNESSES, ORIENTATION, AND QUALITY. CONTRACTOR SHALL SUBMIT DESIGN CALCULATIONS AND DETAILS FOR PIPE SUPPORTS SEALED BY A PROFESSIONAL ENGINEER LICENSED BY THE STATE OR COMMONWEALTH WHERE THE PROJECT IS LOCATED WITH ALL PIPE HANGER AND SUPPORT SUBMISSIONS FOR REVIEW BY THE ENGINEER. WHEN SUBMITTING PROPOSED PIPE SUPPORTS AND SUPPORT LOCATIONS, THE CONTRACTOR SHALL USE APPROVED PIPING LAYOUT SUBMITTAL DRAWINGS TO SHOW PROPOSED PIPE SUPPORT TYPE AND LOCATION WITH ACCURATE DIMENSIONS TO DEMONSTRATE THAT SUPPORTS DO NOT EXCEED THE MAXIMUM SPACING REQUIREMENTS OF SECTION 40 05 07. THIS ENSURES THAT SUPPORTS HAVE BEEN COORDINATED WITH ACTUAL PIPE INSTALLATION DRAWINGS. AND THAT SPACING DOES NOT EXCEED MAXIMUM ALLOWABLE SPACING. THE PIPE SUPPORTS SHOWN AND REFERENCED UNDER SCHEDULES A, B & C ARE DESIGNED AND DETAILED FOR GRAVITY LOADING ONLY. RESULTING LATERAL LOADS FROM CONSTRUCTION CONDITIONS, DESIGN SEISMIC EVENT OR OTHER RELATED CONDITIONS SHALL BE APPLIED TO THE PIPE AND OTHER NON–STRUCTURAL COMPONENTS IN ACCORDANCE WITH THE GOVERNING BUILDING CODE. SUPPLEMENTAL LATERAL STIFFNESS, RESISTANCE AND MEMBERS (WHEN NECESSARY) SHALL BE PROVIDED ALONG PIPE OR AT GRAVITY SUPPORTS AND CONNECTIONS WHEN REQUIRED BY CALCULATIONS.
2. TYPICALLY, REINFORCED CONCRETE SUPPORTS SHALL BE USED WHEN PIPE CENTERLINE IS LESS THAN 3–FEET ABOVE CONCRETE FLOOR OR FINISHED GRADE, AND AT A MINIMUM, SHALL CONFORM TO STANDARD DETAIL S–03–0505.
3. MSS REFERS TO THE MANUFACTURERS STANDARDIZATION SOCIETY OF THE VALVE AND FITTINGS INDUSTRY, STANDARD PRACTICE SP–58 AND SP–69.
4. PIPE WALL SUPPORT AND PIPE SUPPORT RACK SHALL BE ASSEMBLED WITH CHANNEL FRAMES AND ACCESSORIES AS MANUFACTURED BY UNISTRUT CORP, OR VERSABAR CORP, OR EQUAL.
5. FABRICATED PIPE SUPPORT MAY BE USED AS SHOWN IN PIPE SUPPORT RACK DETAIL, OR TO SUPPORT PIPE FROM THE FLOOR.
6. BACK PLATES SHALL BE DESIGNED BY THE CONTRACTOR ACCORDING TO WALL TYPES AND THE WEIGHTS INVOLVED. BACK PLATE TO BE SUPPLIED BY BRACKET MANUFACTURER.
7. ALL INSULATED PIPES SHALL USE A SHIELD (MSS TYPE 40) WITH THE APPLICABLE PIPE SUPPORT.
8. MINIMUM OF ONE HANGER PER PIPE SECTION, CLOSE TO JOINT, ON THE BARREL. ALSO AT CHANGE IN DIRECTION AND BRANCH CONNECTIONS.
9. RODS AND SPACING ARE BASED ON STANDARD WEIGHT MATERIALS ACCORDING TO MSS SP–69. AND ARE FOR REFERENCE ONLY. THE CONTRACTOR SHALL SPACE HIS HANGERS BASED ON ACTUAL CONDITIONS.
10. REFER TO THE APPROPRIATE AND RELATED SPECIFICATION SECTIONS AND DRAWINGS OF THE CONTRACT DOCUMENTS REGARDING SUPPLEMENTAL DESIGN REQUIREMENTS RELATING TO PERFORMANCE SUBMISSIONS BY CONTRACTOR. ALL NON–STRUCTURAL COMPONENTS, INCLUDING PIPING, HVAC DUCT, PLUMBING AND ELECTRICAL CONDUIT SUPPORT SYSTEMS SHALL BE ADEQUATELY DESIGNED AND INSTALLED UTILIZING SUFFICIENT CONNECTIONS AND MEMBERS TO ACCOMMODATE AND RESIST THE DESIGN LATERAL FORCES ASSOCIATED WITH A SPECIFIC COMPONENT'S DYNAMIC INERTIA DURING THE DESIGN SEISMIC EVENT. REFER TO THE CODE COMPLIANCE DRAWING FOR STRUCTURAL DESIGN INFORMATION FOR SPECIFIC SEISMIC DESIGN CRITERIA.

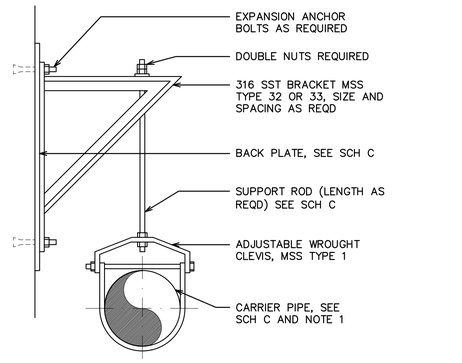

PIPE SUPPORT BRACKET

NO SCALE

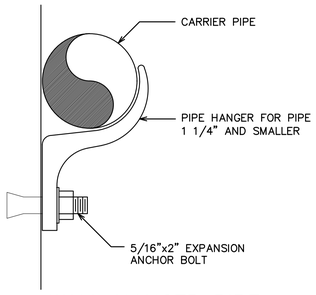

WALL HANGER PIPE SUPPORT

NO SCALE

SCHEDULE D

TRAPEZE SUPPORT (DIM IN INCHES)

PIPE SIZE	STEEL TUBE SUPPORT BEAM VERT x HOR	MINIMUM ROD ø (INCHES)		WASHER PLATE	BASE PLATE			WELD	ADHESIVE ANCHOR DIA	MAX SUPPORT SPACING IN FEET (SEE NOTE 9)	
		PROCESS PIPING	STEEL AIR PIPING		A	B	C	D		PROCESS PIPING	STEEL AIR PIPING
12–14	4x4x3/8	1/2	1/2	4x4x1/4	1	10	3/8	3/16	1/2	10	15
16–24	4x4x3/8	3/4	5/8	4x4x3/8	1	10	1/2	3/16	5/8	10	15
30–36	6x4x3/8	1	3/4	4x4x1/2	2	12	1/2	1/4	3/4	10	20
42	6x4x3/8	1 1/4	3/4	5x5x1/2	2	12	3/4	1/4	7/8	10	25
48	8x4x3/8	1 1/2	1	5x5x3/4	2	12	1	1/4	1	10	30

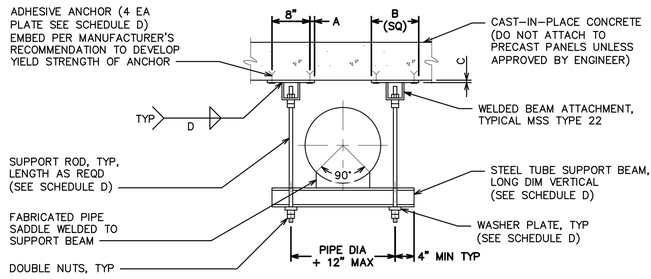

TRAPEZE SUPPORT

NO SCALE

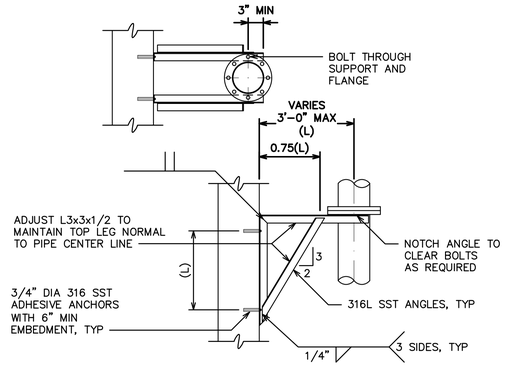

FLANGE TYPE SUPPORT

NO SCALE

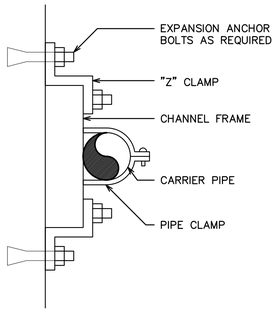

PIPE WALL SUPPORT AND SUPPORT RACK SHALL BE ASSEMBLED W/ CHANNEL FRAMES AND ACCESSORIES AS MANUFACTURED BY UNISTRUT CORP OR EQUAL.

PIPE WALL SUPPORT

NO SCALE

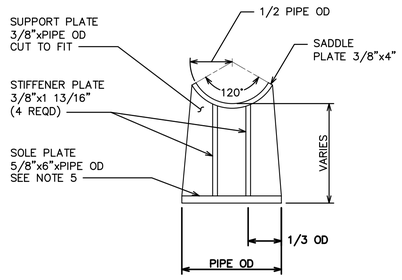

FABRICATED PIPE SUPPORT (AT PIPE)

NO SCALE

SCHEDULE C

SUPPORT RODS AND BRACKET SPACING (FOR STANDARD WEIGHT PIPE)

PIPE SIZE (INCHES)	BACK PLATE (INCHES)	MINIMUM ROD ø (INCHES)		MAX SPAN IN FEET (SEE NOTE 9)			
		PROCESS PIPING	STEEL AIR PIPING	COPPER	PLASTIC	STEEL	DIP (SEE NOTE 8)
UP TO 1	SEE NOTE 6	3/8	3/8	5	5	6	–
1 1/4–2	"	3/8	3/8	8	5	10	–
2 1/2–3 1/2	"	3/8	3/8	8	5	12	6
4–5	"	1/2	3/8	–	5	14	8
6	"	5/8	3/8	–	5	15	9
8–12	"	3/4	1/2	–	5	15	9
14–16	"	7/8	1/2	–	5	15	9
18	"	1	1/2	–	5	18	10
20–24	"	1 1/4	5/8	–	5	18	10

811 Know what's below. Call before you dig.

REV.	DESCRIPTION	DATE	DRAWN	CHECKED
	ISSUED FOR BIDS SET	12–13–2021		
	90% DESIGN SUBMITTAL	11–22–2021		
	70% DESIGN SUBMITTAL	10–29–2021		
	50% DESIGN SUBMITTAL	10–01–2021		

CITY OF ANN ARBOR
PUBLIC SERVICES
301 EAST HURON STREET
P.O. BOX 8647
ANN ARBOR, MI 48107–8647
(734) 794–6410
www.a2gov.org

PROJECT MANAGEMENT - PUBLIC SERVICES - CITY OF ANN ARBOR

HEADWORKS IMPROVEMENTS PROJECT

PROCESS MISCELLANIOUS DETAILS – III

SCALE N.T.S.

DRAWING No. 514

SHEET No. P–08

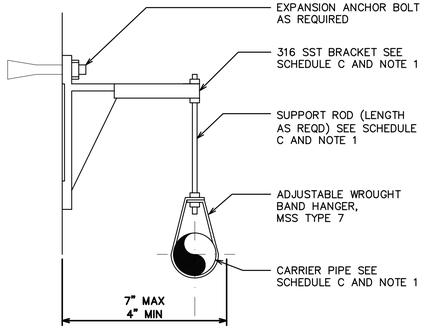

PIPE SUPPORT BRACKET

NO SCALE

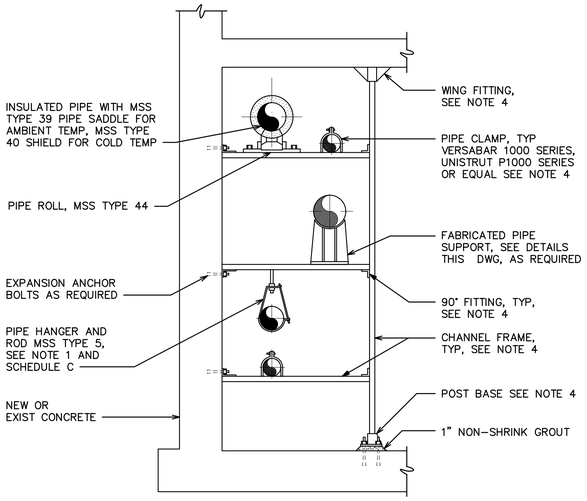

PIPE SUPPORT RACK

NO SCALE

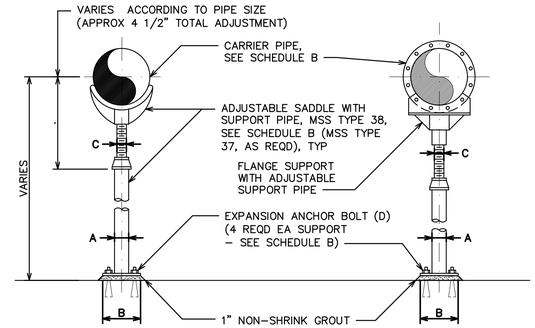

ADJUSTABLE SADDLE

FLANGE SUPPORT

ADJUSTABLE SUPPORT

NO SCALE

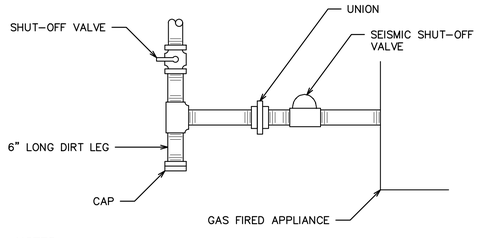

NOTES:

1. SEISMIC SHUT-OFF VALVES ARE OPTIONAL AND ARE NOT REQUIRED FOR NONESSENTIAL FACILITIES LOCATED WITHIN SEISMIC ZONES 1 OR 2.

GAS FIRED APPLIANCE CONNECTION

NO SCALE

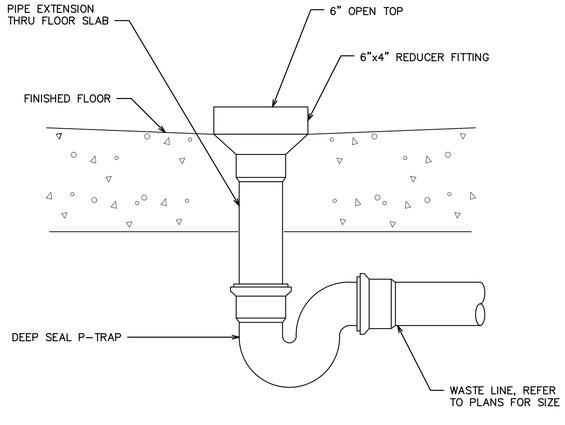

HUB DRAIN

NO SCALE

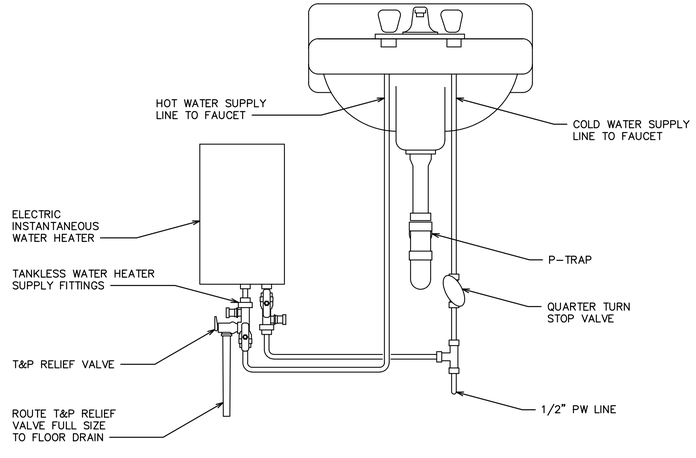

INSTANTANEOUS WATER HEATER

NO SCALE

Know what's **below.** **Call before you dig.** 811

REV.	DESCRIPTION	DATE	DRAWN	CHECKED
	ISSUED FOR BIDS SET	12-13-2021		
	90% DESIGN SUBMITTAL	11-22-2021		
	70% DESIGN SUBMITTAL	10-29-2021		
	50% DESIGN SUBMITTAL	10-01-2021		

CITY OF ANN ARBOR
PUBLIC SERVICES
301 EAST HURON STREET
P.O. BOX 8647
ANN ARBOR, MI 48107-8647
734.794-6410
www.a2gov.org

PROJECT MANAGEMENT - PUBLIC SERVICES - CITY OF ANN ARBOR

HEADWORKS IMPROVEMENTS PROJECT
PROCESS MISCELLANIOUS DETAILS - IV

SCALE N.T.S.

DRAWING No. 516

SHEET No.

P-09

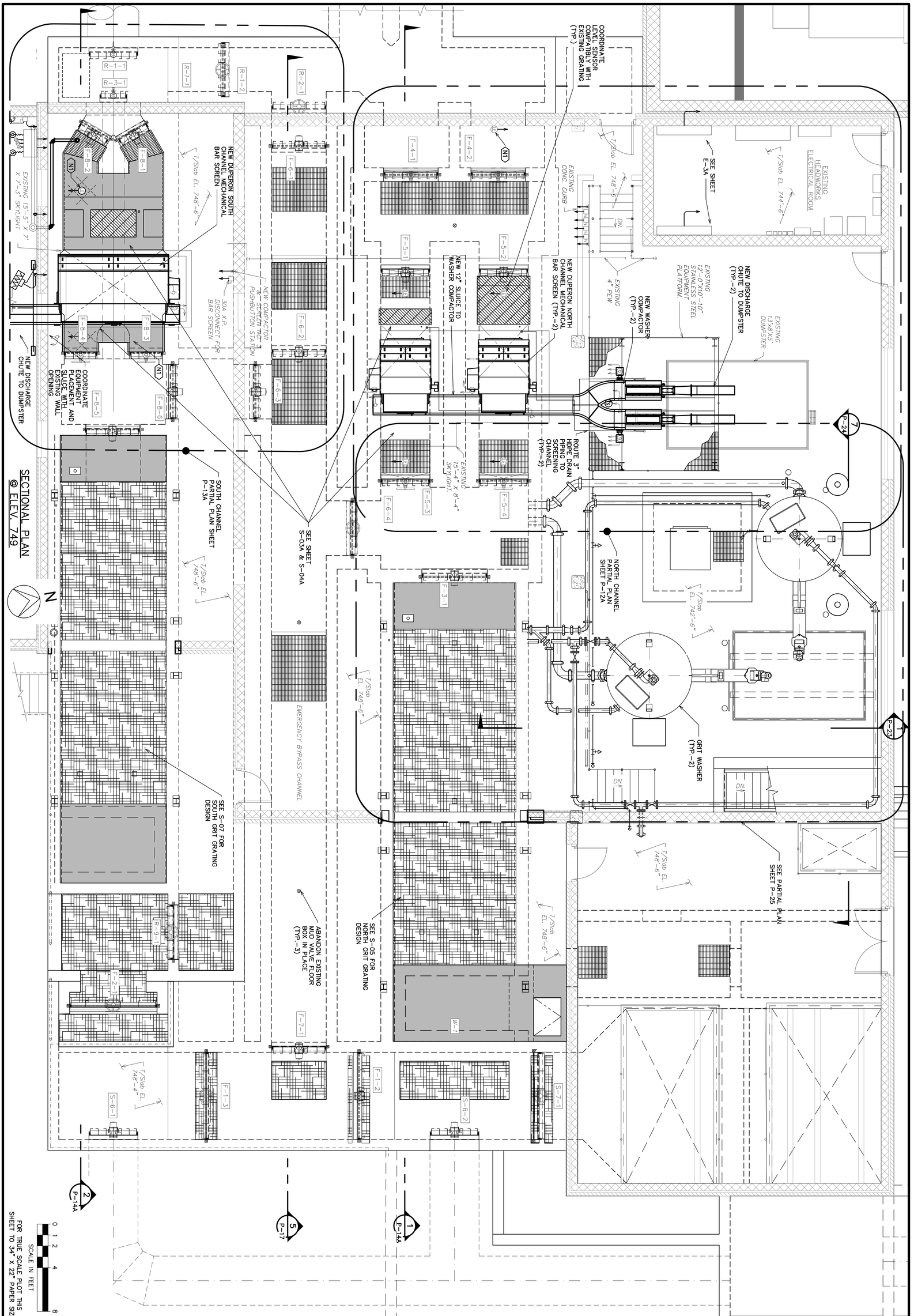

SHEET No. P-10A

PROJECT MANAGEMENT - PUBLIC SERVICES - CITY OF ANN ARBOR

HEADWORKS IMPROVEMENTS PROJECT

HEADEWORKS BUILDING
PLAN ELEV. 749 (DUPERON)

SCALE: AS NOTED

DRAWING No.: 518

CITY OF ANN ARBOR
PUBLIC SERVICES
301 EAST HURON STREET
P.O. BOX 8647
ANN ARBOR, MI 48107-8647
734-794-6410
www.a2gov.org

REV.	DESCRIPTION	DATE	DRAWN	CHECKED
	ISSUED FOR BIDS SET	12-13-2021		
	90% DESIGN SUBMITTAL	11-22-2021		
	70% DESIGN SUBMITTAL	10-29-2021		
	50% DESIGN SUBMITTAL	10-01-2021		

811 Know what's below. Call before you dig.

EXISTING HEADWORKS ELECTRICAL ROOM

4" PEW

3" PEW

EXISTING EQUIPMENT SUPPORT COLUMN (TYP)

GRIT WASHER, TYP OF 2

CUT EXISTING DRAIN PIPING TO CHANNEL GRADE AND CAP (TYP.-3)

EXIST. 16'-6"X1'-3" TRENCH DRAIN (TYP.-2)

NEW SUBMERSIBLE SUMP PUMP (TYP.-2) REFER TO SPECIFICATION 11133

EL. 742'-6"

NORTH CHANNEL PARTIAL PLAN SHEET P-12A

NEW DUPERON NORTH CHANNEL MECHANICAL BAR SCREEN (TYP.-2)

SEE NORTH CHANNEL STRUCTURAL MODIFICATIONS SHEET S-3 (TYP.)

CAP EXISTING CHANNEL DRAIN (TYP. 3)

EL. 734'-6"

EXISTING 4" DI LOWER ALCOVE SUMP PUMP PIPING (TYP.)

7 P-19

GRIT PUMP NO. 1

SEAL WATER PANEL PUMP NO. 1

2" SOLENOID

NEW SUBMERSIBLE SUMP PUMP (TYP.-2) REFER TO SPECIFICATION 11133

CONNECT NEW SUMP PUMP TO EXISTING 4" DISCHARGE PIPING AND VALVES (TYP-4.)

GRIT PUMP NO. 2

SEAL WATER PANEL PUMP NO. 2

6 P-18

GRIT COLLECTOR No. 1

EL. 728'-6"

S-7-1

96"X78" SLIDE GATE

SEE PARTIAL PLAN SHEET P-17

EL. 741'-0"

EL. 739'-6"

F-4-2

F-5-2

F-5-4

60"X78" SLIDE GATE

54"X78" SLIDE GATE

54"X84" SLIDE GATE

72"X84" SLIDE GATE

F-3-1

EFFLUENT WEIR, TYP

W-1

EL. 734'-6"

S-6-2

54" PIPE

EL. 742'-0"

EL. 741'-0"

EL. 739'-6"

F-4-1

F-5-1

F-5-3

60"X78" SLIDE GATE

54"X78" SLIDE GATE

54"X84" SLIDE GATE

60"X66" SLIDE GATE

1 P-14A

FROM RAW SEWAGE PUMP STATION

F-6-4

60"X72" SLIDE GATE

96"X78" SLIDE GATE

F-1-2

R-2-1

F-6-1

F-6-2

NEW STATIONARY BAR SCREEN

EMERGENCY BYPASS CHANNEL

EL. 741'-6"

SOUTH CHANNEL PARTIAL PLAN SHEET P-13A

60"X66" SLIDE GATE

F-7-1

ABANDON EXISTING CHANNEL DRAIN MUD VALVE IN PLACE (TYP.)

EL. 738'-6"

5 P-16

F-6-3

R-1-2

F-1-3

96"X78" SLIDE GATE

SEE PARTIAL PLAN SHEET P-17

EL. 741'-6"

NEW DUPERON SOUTH CHANNEL MECHANICAL BAR SCREEN

GRIT COLLECTOR No. 2

F-8-6

R-9-1

EL. 740'-10"

48" DIA. SLIDE GATE

F-8-1

EL. 742'-0"

F-8-3

EFFLUENT WEIR, TYP

EL. 734'-6"

R-1-1

R-3-1

F-8-5

F-2-1

S-6-1

54" PIPE

96"X72" SLIDE GATE

60"X66" SLIDE GATE

F-8-2

EXISTING 21" BYPASS PIPE BELOW

2 P-14A

24" DIA. SLIDE GATE

F-8-4

FROM DOWN RIVER SEWER SYSTEM

SEE SOUTH CHANNEL STRUCTURAL MODIFICATIONS SHEET S-4A

N

SECTIONAL PLAN @ ELEV. 743

SCALE: 1/4" = 1'-0"

0 1 2 4 8

SCALE IN FEET

FOR TRUE SCALE PLOT THIS SHEET TO 34" X 22" PAPER SIZE

811 Know what's below. Call before you dig.

REV.	DESCRIPTION	DATE	DRAWN	CHECKED
	ISSUED FOR BIDS SET	12-13-2021		
	90% DESIGN SUBMITTAL	11-22-2021		
	70% DESIGN SUBMITTAL	10-29-2021		
	50% DESIGN SUBMITTAL	10-01-2021		

CITY OF ANN ARBOR
PUBLIC SERVICES
301 EAST HURON STREET
P.O. BOX 8647
ANN ARBOR, MI 48107-8647
734.794.6410
www.a2gov.org

PROJECT MANAGEMENT - PUBLIC SERVICES - CITY OF ANN ARBOR

HEADWORKS IMPROVEMENTS PROJECT

HEADWORKS BUILDING
PLAN ELEV. 743 (DUPERON)

SCALE AS NOTED

DRAWING No. 520

SHEET No. P-11A

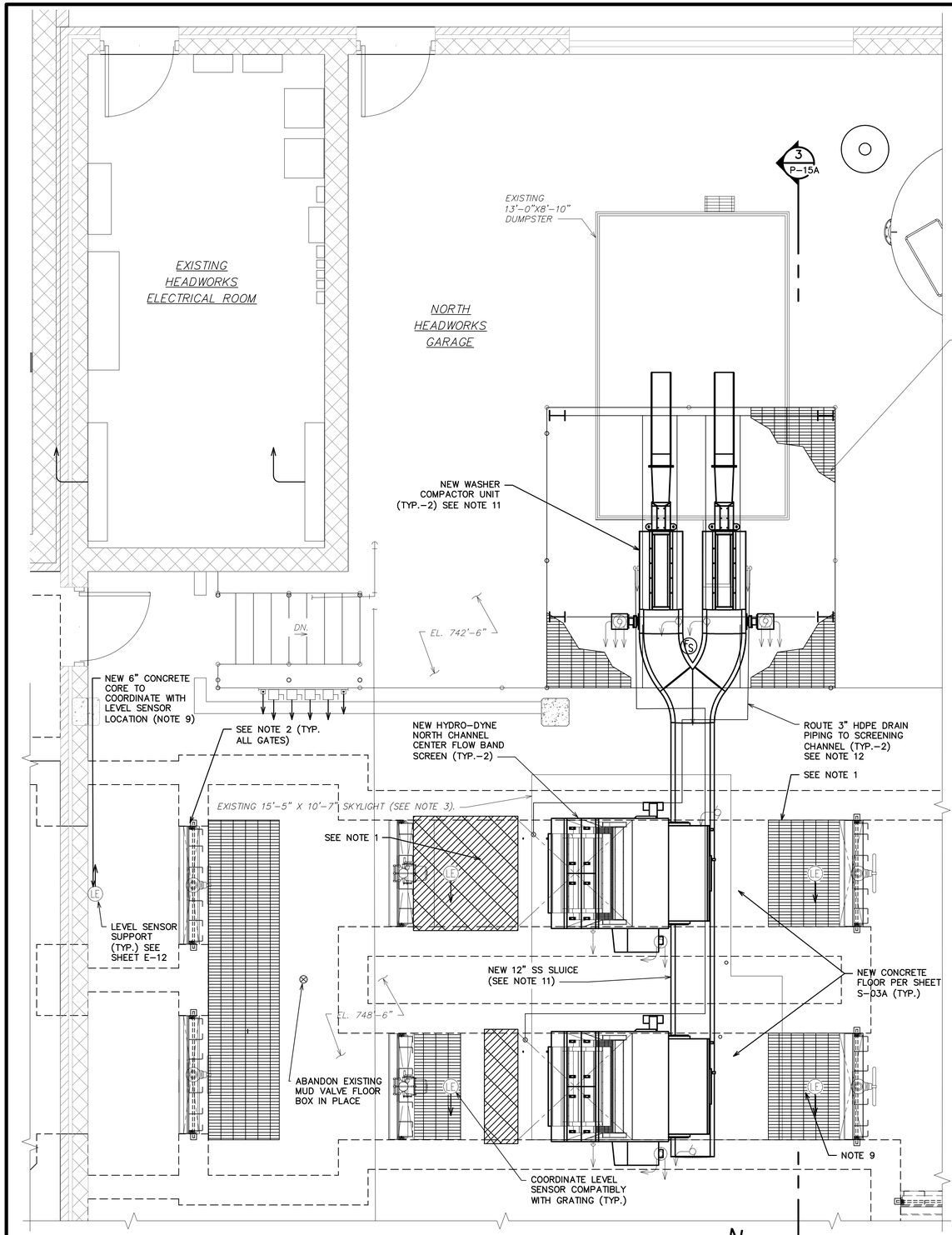

PARTIAL PLAN @ ELEV. 749 (OPERATOR FLOOR) – NORTH SCREENING AREA

SCALE: 3/8" = 1'-0"

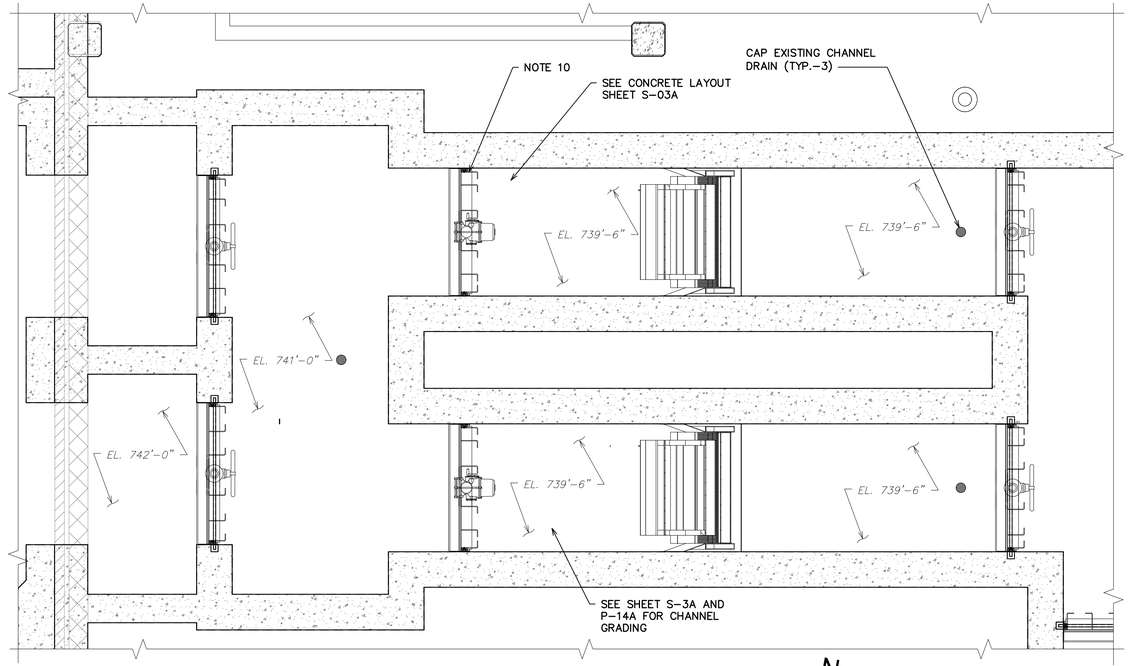

PARTIAL PLAN @ ELEV. 743 – NORTH SCREENING AREA

SCALE: 3/8" = 1'-0"

GENERAL NOTES:

1. REFER TO STRUCTURAL SHEETS DS-02 TO DS-06 AND S-01 THROUGH S-06 FOR ALL STRUCTURAL MODIFICATIONS AND REPAIRS WITHIN THE SCREENING CHANNELS.
2. PROTECT ALL EXISTING GATES, ACTUATORS, ELECTRICAL CONDUITS, ETC. AND ENSURE THEY REMAIN IN SERVICE DURING CONSTRUCTION PROCESS.
3. SKYLIGHTS TO BE REMOVED AND REINSTALLED TO ALLOW FOR INSTALLATION OF NEW SCREENING EQUIPMENT. REFER TO SPECIFICATION 01950- SEQUENCE OF CONSTRUCTION.
4. INSTALL TWO (NORTH CHANNELS) DUPERON FLEXRAKE SCREENS PER MANUFACTURER INSTRUCTIONS. SEE SPECIFICATION 11350 – SCREENING EQUIPMENT FOR MORE INFORMATION.
5. COORDINATE SCREEN INSTALLATION WITH MANUFACTURER STRUCTURAL ANCHOR REQUIREMENTS, ALSO FOR ADDITIONAL REQUIREMENTS SEE SHEET S-15.
6. CONTRACTOR TO COORDINATE GRATING DIMENSIONS WITH FINAL PLACEMENT OF SCREEN AND SCREEN COVER ASSEMBLY.
7. CUT AND CAP EXISTING MUD VALVES FROM CHANNELS AND CAP WITH BLIND FLANGE AT ELEVATION OF CHANNEL. GROUT OVER TO LEVEL.
8. CONTRACTOR TO PROTECT EXISTING STAINLESS STEEL, EQUIPMENT PLATFORM AND HANDRAIL THROUGHOUT CONSTRUCTION.
9. FINAL CONCRETE CORE HOLE AND GRATING OPENING SIZE TO BE COORDINATED WITH LEVEL SENSOR MANUFACTURER. SEE LEVEL SENSOR FLOOR MOUNT DETAIL SHEET E-12
10. ALL EXISTING ISOLATION GATES REQUIRED FOR CONSTRUCTION ISOLATION REQUIRE SEAL REPLACEMENT PRIOR TO CONSTRUCTION. SEE SPECIFICATION 11283.
11. REFER TO ELECTRICAL SHEETS FOR ALL ELECTRICAL MODIFICATIONS.
12. REFER TO SPECIFICATION 15060 – EXPOSED PROCESS PIPE AND SPECIFICATION 15100 – VALVES NEW PEW PIPING, WASHER COMPACTOR DRAIN PIPING, SOLENOID VALVE, ISOLATION VALVE, ETC. REQUIREMENTS.

811 Know what's below. Call before you dig.

REV.	DESCRIPTION	DATE	DRAWN	CHECKED
	ISSUED FOR BIDS SET	12-13-2021		
	90% DESIGN SUBMITTAL	11-22-2021		
	70% DESIGN SUBMITTAL	10-29-2021		
	50% DESIGN SUBMITTAL	10-01-2021		

CITY OF ANN ARBOR
PUBLIC SERVICES
301 EAST HURON STREET
P.O. BOX 8647
ANN ARBOR, MI 48107-8647
734.794.6410
www.a2gov.org

PROJECT MANAGEMENT - PUBLIC SERVICES - CITY OF ANN ARBOR

HEADWORKS IMPROVEMENTS PROJECT
HEADWORKS BUILDING
NORTH SCREENING AREA PARTIAL PLANS
(DUPERON)

SCALE: AS NOTED

DRAWING No. 522

SHEET No.
P-12A

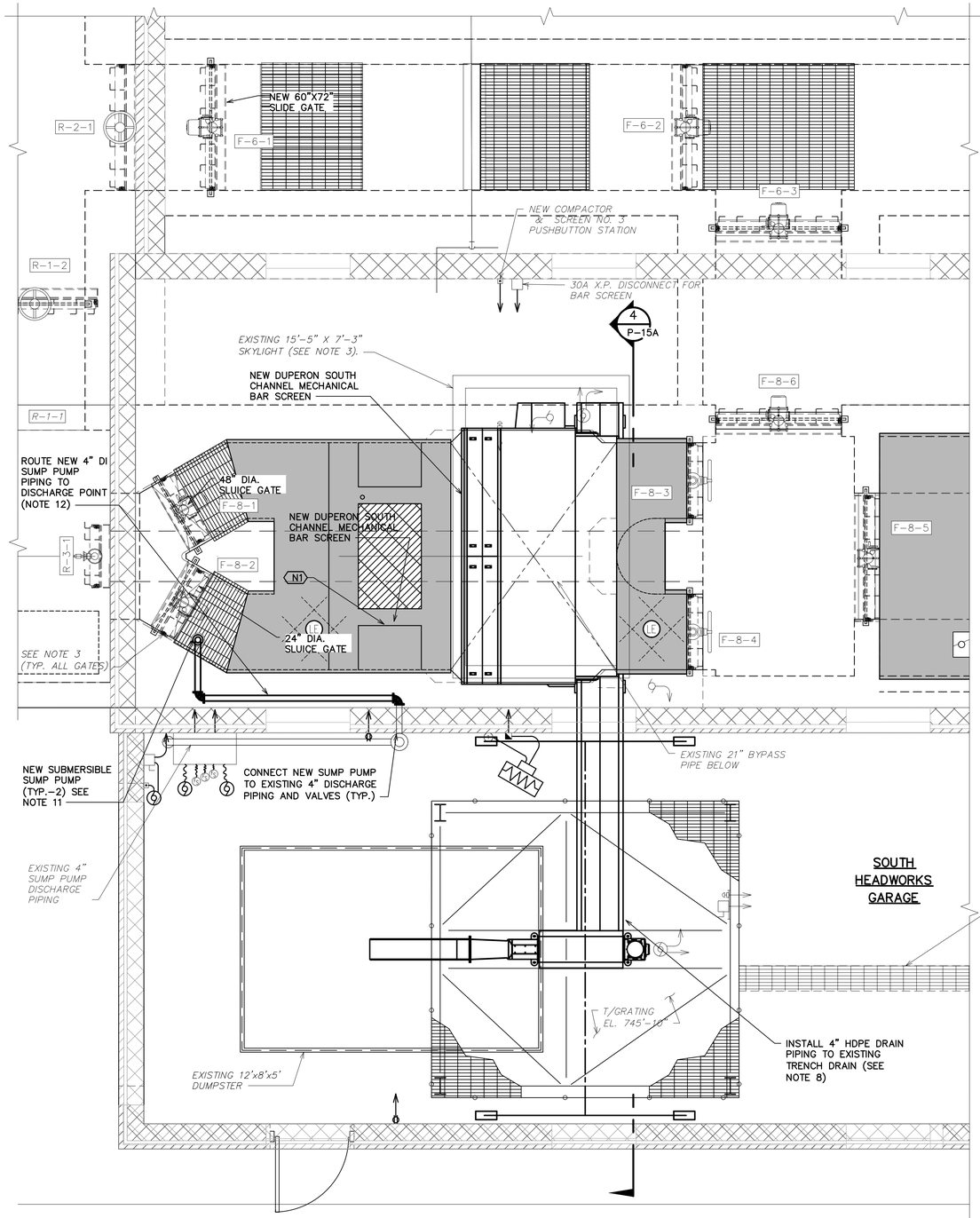

PARTIAL PLAN @ ELEV. 749 – SOUTH SCREENING AREA

SCALE: 3/8" = 1'-0"

N

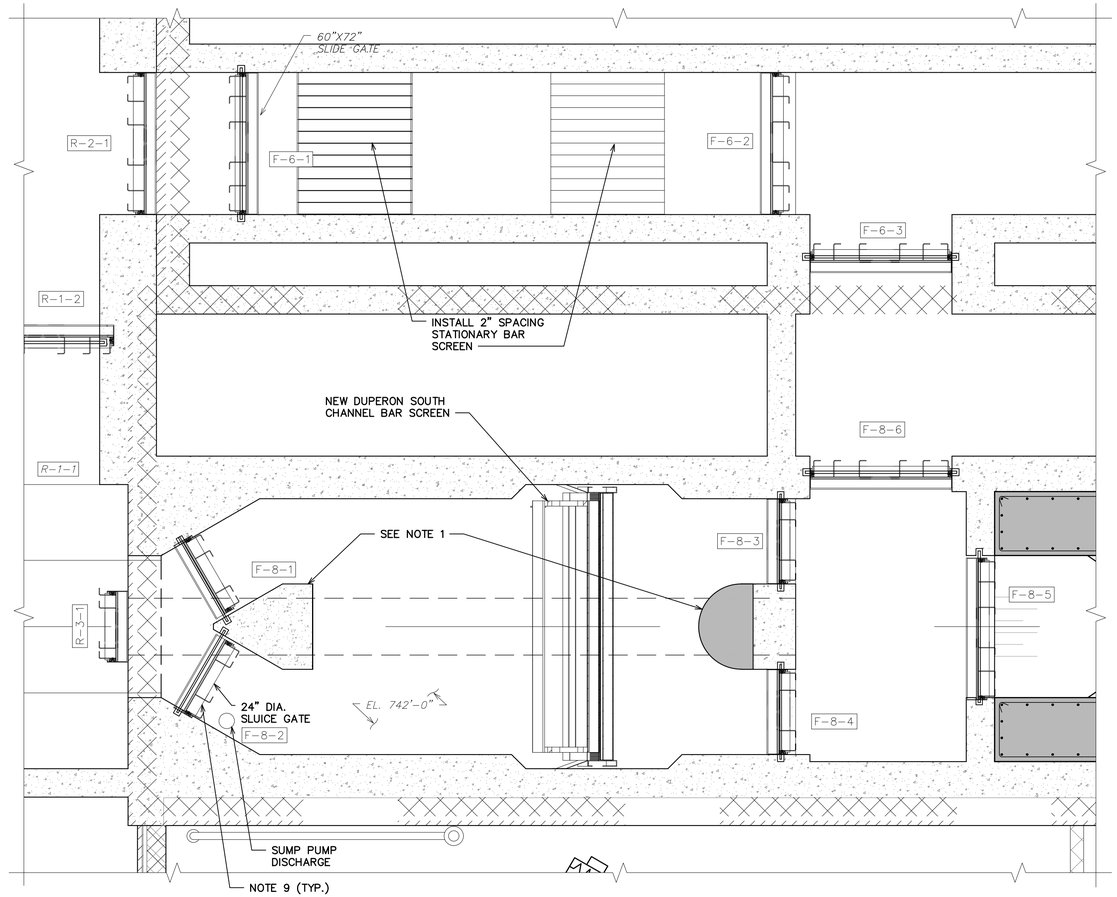

PARTIAL PLAN @ ELEV. 743 – SOUTH SCREENING AREA

SCALE: 3/8" = 1'-0"

N

GENERAL NOTES

1. REFER TO STRUCTURAL DEMO SHEETS AND STRUCTURAL SHEETS S-02 THROUGH S-06 FOR ALL STRUCTURAL MODIFICATIONS AND REPAIRS WITHIN THE SCREENING CHANNELS.
2. COORDINATE WALL OPENING TO ACCOMMODATE SOUTH CHANNEL SCREEN 3 WITH EXISTING WALL OPENING ON SHEET DP-02, DP-03 AND ARCHITECTURAL SHEETS.
3. PROTECT ALL EXISTING GATES, ACTUATORS, ELECTRICAL CONDUITS, ETC. AND ENSURE THEY REMAIN IN SERVICE THROUGHOUT CONSTRUCTION.
4. SKYLIGHTS SHALL BE REMOVED AND REINSTALLED TO ALLOW FOR INSTALLATION OF NEW SCREENING EQUIPMENT.
5. INSTALL ONE (SOUTH CHANNEL) DUPERON FLEXRAKE SCREEN PER MANUFACTURER INSTRUCTIONS. SEE SPECIFICATION 11350A – SCREENING EQUIPMENT FOR MORE INFORMATION.
6. COORDINATE SCREEN INSTALLATION WITH STRUCTURAL ANCHOR REQUIREMENTS, SEE SHEET S-15.
7. REFER TO SPECIFICATION 15060 – EXPOSED PROCESS PIPE AND SPECIFICATION 15100 – VALVES NEW PEW PIPING, WASHER COMPACTOR DRAIN PIPING, SOLENOID VALVE, ISOLATION VALVE, ETC. REQUIREMENTS.
8. FINAL CONCRETE CORE HOLE AND GRATING OPENING SIZE TO BE COORDINATED WITH LEVEL SENSOR MANUFACTURER.
9. ALL EXISTING ISOLATION GATES REQUIRED FOR CONSTRUCTION ISOLATION REQUIRE SEAL REPLACEMENT PRIOR TO CONSTRUCTION. SEE SPECIFICATION 11283
10. REFER TO SPECIFICATION 11133 – SUBMERSIBLE SUMP PUMP FOR DETAILED INFORMATION ON SUMP PUMP REQUIREMENTS.
11. REFER TO ELECTRICAL SHEETS FOR ALL ELECTRICAL MODIFICATIONS.
12. COORDINATE OPENING WITHIN EXISTING GRATING WITH NEW SUMP PUMP DISCHARGE PIPING

811 Know what's below. Call before you dig.

REV.	DESCRIPTION	DATE	DRAWN	CHECKED
	ISSUED FOR BIDS SET	12-13-2021		
	90% DESIGN SUBMITTAL	11-22-2021		
	70% DESIGN SUBMITTAL	10-29-2021		
	50% DESIGN SUBMITTAL	10-01-2021		

CITY OF ANN ARBOR
PUBLIC SERVICES
301 EAST HURON STREET
P.O. BOX 8647
ANN ARBOR, MI 48107-8647
734.794.6410
www.a2gov.org

PROJECT MANAGEMENT - PUBLIC SERVICES - CITY OF ANN ARBOR

HEADWORKS IMPROVEMENTS PROJECT
HEADWORKS BUILDING
SOUTH SCREENING AREA
PARTIAL PLANS (DUPERON)

SCALE: AS NOTED

DRAWING No. 524

SHEET No. P-13A

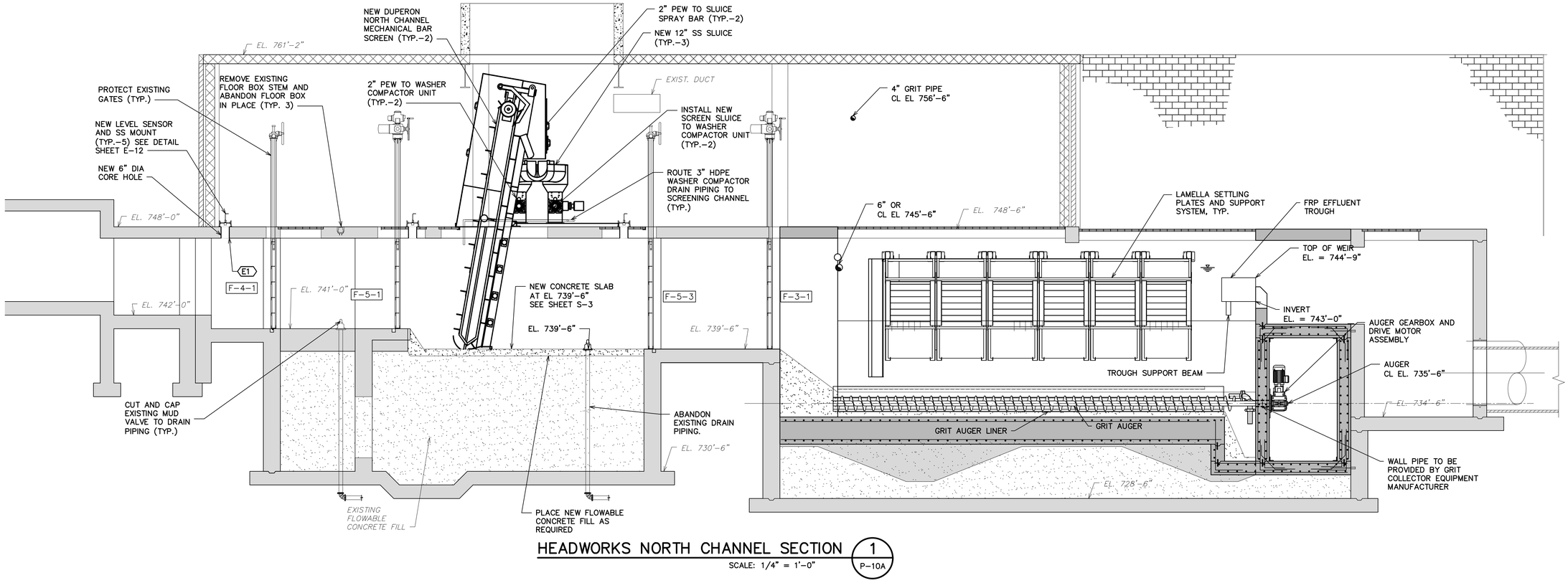

HEADWORKS NORTH CHANNEL SECTION

SCALE: 1/4" = 1'–0"

1 / P–10A

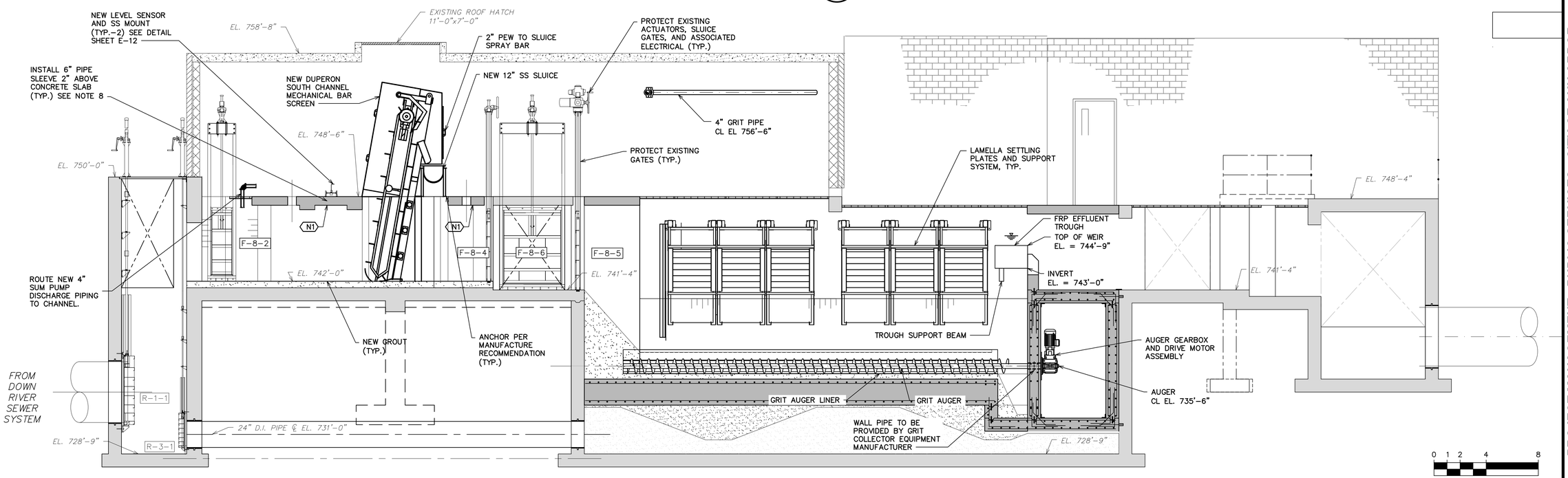

HEADWORKS SOUTH CHANNEL SECTION

SCALE: 1/4" = 1'–0"

2 / P–10A

0 1 2 4 8

SCALE IN FEET

FOR TRUE SCALE PLOT THIS SHEET TO 34" X 22" PAPER SIZE

811 Know what's below. Call before you dig.

REV.	DESCRIPTION	DATE	DRAWN	CHECKED
	ISSUED FOR BIDS SET	12–13–2021		
	90% DESIGN SUBMITTAL	11–22–2021		
	70% DESIGN SUBMITTAL	10–29–2021		
	50% DESIGN SUBMITTAL	10–01–2021		

CITY OF ANN ARBOR
PUBLIC SERVICES
301 EAST HURON STREET
P.O. BOX 8647
ANN ARBOR, MI 48107-8647
734.794.6410
www.a2gov.org

PROJECT MANAGEMENT - PUBLIC SERVICES - CITY OF ANN ARBOR

HEADWORKS IMPROVEMENTS PROJECT

HEADWORKS BUILDING
NORTH AND SOUTH TRAIN
SECTIONS (DUPERON)

SCALE: AS SHOWN

DRAWING No. 526

SHEET No. P–14A

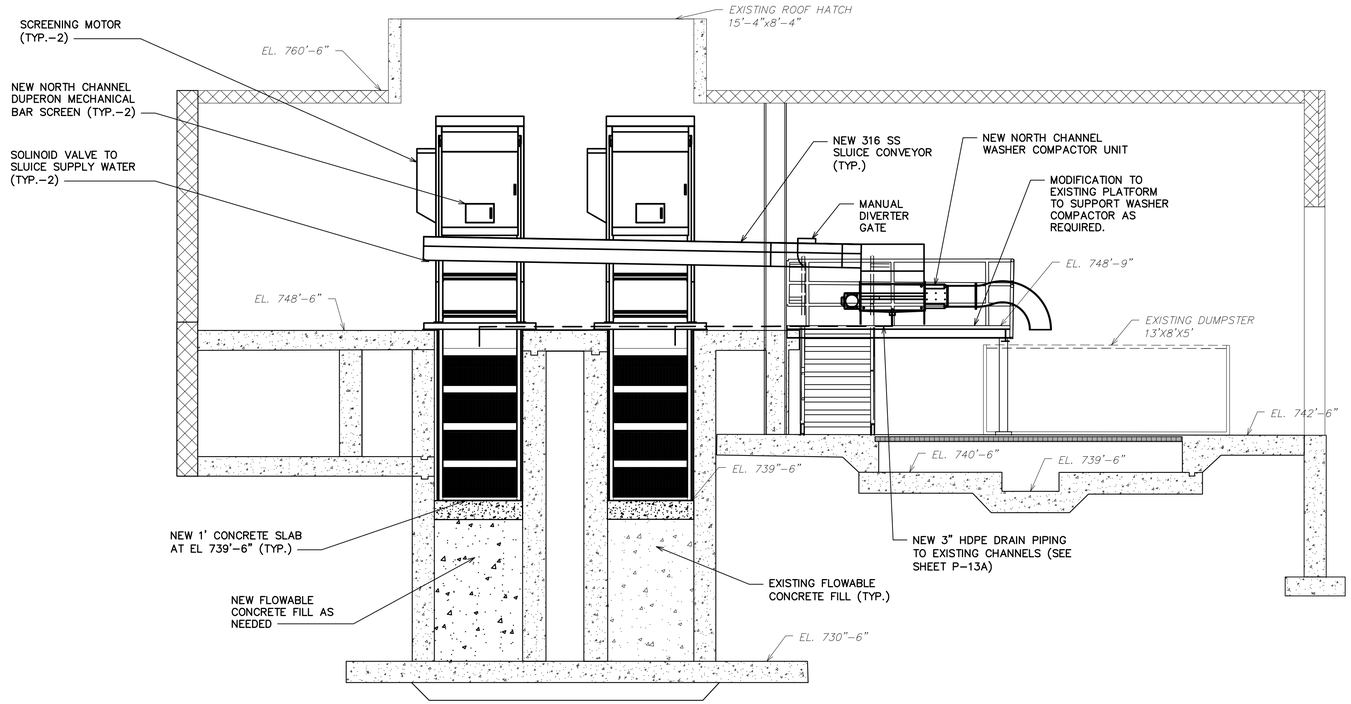

NORTH SCREENING SECTION 3 P–12A

SCALE: 3/8" = 1'–0"

GENERAL NOTES

1. REFER TO STRUCTURAL DEMO SHEETS AND STRUCTURAL SHEETS S–02 THROUGH S–06 FOR ALL STRUCTURAL MODIFICATIONS AND REPAIRS WITHIN THE SCREENING CHANNELS.
2. COORDINATE WALL OPENING TO ACCOMMODATE SOUTH CHANNEL SCREEN 3 WITH EXISTING WALL OPENING ON SHEET DP–02, DP–03 AND ARCHITECTURAL SHEETS.
3. PROTECT ALL EXISTING GATES, ACTUATORS, ELECTRICAL CONDUITS, ETC. AND ENSURE THEY REMAIN IN SERVICE THROUGHOUT CONSTRUCTION.
4. SKYLIGHTS SHALL BE REMOVED AND REINSTALLED TO ALLOW FOR INSTALLATION OF NEW SCREENING EQUIPMENT.
5. INSTALL THREE DUPERON FLEXRAKE SCREEN PER MANUFACTURER INSTRUCTIONS. SEE SPECIFICATION 11350A – SCREENING EQUIPMENT FOR MORE INFORMATION.
6. COORDINATE SCREEN INSTALLATION WITH STRUCTURAL ANCHOR REQUIREMENTS, SEE SHEET S–15.
7. REFER TO SPECIFICATION 15060 – EXPOSED PROCESS PIPE AND SPECIFICATION 15100 – VALVES NEW PEW PIPING, WASHER COMPACTOR DRAIN PIPING, SOLENOID VALVE, ISOLATION VALVE, ETC. REQUIREMENTS.
8. FINAL CONCRETE CORE HOLE AND GRATING OPENING SIZE TO BE COORDINATED WITH LEVEL SENSOR MANUFACTURER.
9. ALL EXISTING ISOLATION GATES REQUIRED FOR CONSTRUCTION ISOLATION REQUIRE SEAL REPLACEMENT PRIOR TO CONSTRUCTION. SEE SPECIFICATION 11283.
10. REFER TO SPECIFICATION 11133 – SUBMERSIBLE SUMP PUMP FOR DETAILED INFORMATION ON SUMP PUMP REQUIREMENTS.
11. REFER TO ELECTRICAL SHEETS FOR ALL ELECTRICAL MODIFICATIONS.

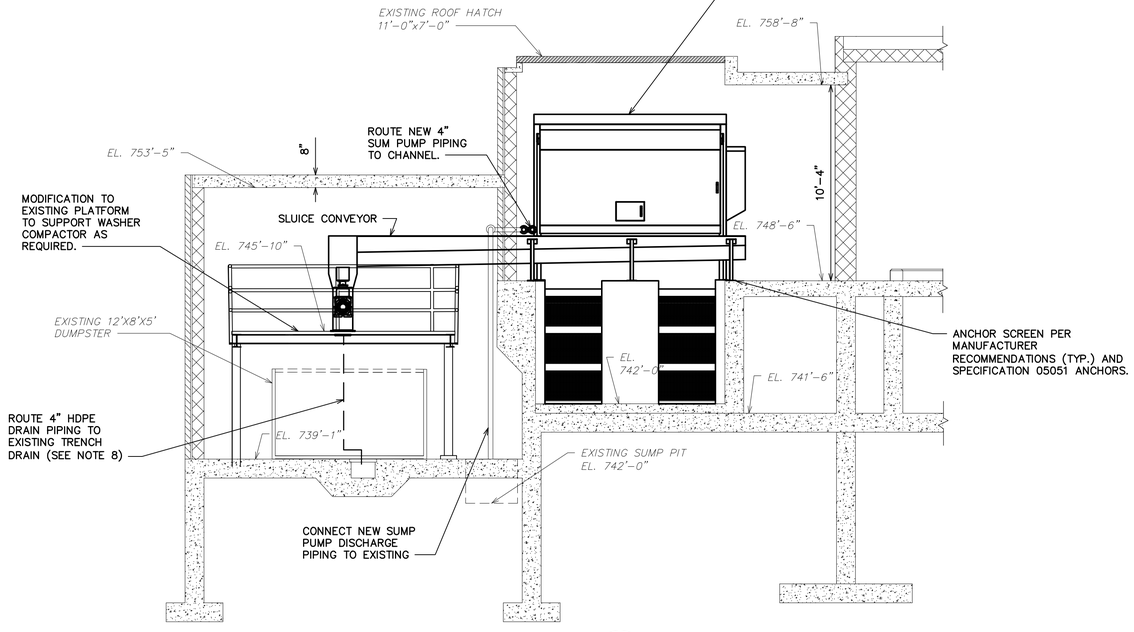

SOUTH SCREENING SECTION 4 P–13A

SCALE: 1/4" = 1'–0"

0 1 2 4 8

SCALE IN FEET

FOR TRUE SCALE PLOT THIS SHEET TO 34" X 22" PAPER SIZE

811 Know what's below. Call before you dig.

REV.	DESCRIPTION	DATE	DRAWN	CHECKED
	50% DESIGN SUBMITTAL	10–01–2021		
	70% DESIGN SUBMITTAL	10–29–2021		
	90% DESIGN SUBMITTAL	11–22–2021		
	ISSUED FOR BIDS SET	12–13–2021		

CITY OF ANN ARBOR
PUBLIC SERVICES
301 EAST HURON STREET
P.O. BOX 8647
ANN ARBOR, MI 48107-8647
734.794.6410
www.a2gov.org

PROJECT MANAGEMENT - PUBLIC SERVICES - CITY OF ANN ARBOR

HEADWORKS IMPROVEMENTS PROJECT

HEADWORKS BUILDING
NORTH AND SOUTH
SCREENING SECTIONS (DUPERON)

SCALE: AS SHOWN

DRAWING No. 528

SHEET No. P–15A

EXISTING HEADWORKS ELECTRICAL ROOM

T/Slab EL. 744'-6"

EXISTING 13'x8'X5' DUMPSTER

NEW DISCHARGE CHUTE TO DUMPSTER (TYP.-2)

EXISTING 12'-0"X10'-10" STAINLESS STEEL EQUIPMENT PLATFORM.

NEW WASHER COMPACTOR (TYP.-2)

4" PEW

T/Slab EL. 748'-6"

DN.

EXISTING CONC. CURB

NEW HYDRO-DYNE NORTH CHANNEL CENTER FLOW BAND SCREEN (TYP.-2)

COORDINATE LEVEL SENSOR COMPATIBLY WITH EXISTING GRATING (TYP.)

ROUTE 3" HDPE DRAIN PIPING TO SCREENING CHANNEL (TYP.-2)

NORTH PARTIAL PLAN SHEET P-12B

T/Slab EL. 742'-6"

GRIT WASHER (TYP OF 2)

SEE PARTIAL PLAN SHEET P-25

T/Slab EL. 748'-6"

T/Slab EL. 748'-6"

NEW 12" SLUICE TO WASHER COMPACTOR

EXISTING 15'-4" X 8'-4" SKYLIGHT.

EMERGENCY BYPASS CHANNEL

ABANDON EXISTING MUD VALVE FLOOR BOX IN PLACE (TYP.-3)

NEW COMPACTOR & SCREEN NO. 3 PUSHBUTTON STATION

30A X.P. DISCONNECT FOR BAR SCREEN

EXISTING 15'-5" X 7' X 7'-3" SKYLIGHT

NEW HYDRO-DYNE SOUTH CHANNEL CENTER FLOW BAND SCREEN

SOUTH PARTIAL PLAN SHEET P-13B

T/Slab EL. 748'-4"

COORDINATE EQUIPMENT PLACEMENT AND SLUICE WITH EXISTING WALL OPENING

NEW DISCHARGE CHUTE TO DUMPSTER

SECTIONAL PLAN @ ELEV. 749

SCALE IN FEET

FOR TRUE SCALE PLOT THIS SHEET TO 34" X 22" PAPER SIZE

Know what's below. Call before you dig.

REV.	DESCRIPTION	DATE	DRAWN	CHECKED
	ISSUED FOR BIDS SET	12-13-2021		
	90% DESIGN SUBMITTAL	11-22-2021		
	70% DESIGN SUBMITTAL	10-29-2021		
	50% DESIGN SUBMITTAL	10-01-2021		

CITY OF ANN ARBOR
PUBLIC SERVICES
301 EAST HURON STREET
P.O. BOX 8647
ANN ARBOR, MI 48107-8647
734.794.6410
www.a2gov.org

PROJECT MANAGEMENT - PUBLIC SERVICES - CITY OF ANN ARBOR

HEADWORKS IMPROVEMENTS PROJECT
HEADWORKS BUILDING
PLAN ELEV. 749 (HYDRO-DYNE)

SCALE AS NOTED

DRAWING No. 530

SHEET No. P-10B

EXISTING HEADWORKS ELECTRICAL ROOM

4" PEW

3" PEW

EXISTING EQUIPMENT SUPPORT COLUMN (TYP)

EXIST. 16'-6"X1'-3" TRENCH DRAIN (TYP.-2)

NEW SUBMERSIBLE SUMP PUMP (TYP.-2) REFER TO SPECIFICATION 11133

EL. 742'-6"

CUT EXISTING DRAIN PIPING TO CHANNEL GRADE AND CAP (TYP.-3)

NORTH PARTIAL PLAN SHEET P-12B

NEW HYDRO-DYNE NORTH CHANNEL MECHANICAL BAR SCREEN (TYP.-2)

SEE NORTH CHANNEL STRUCTURAL MODIFICATIONS SHEET S-3B (TYP.)

CAP EXISTING CHANNEL DRAIN (TYP. 3)

EL. 741'-0"

EL. 739'-6"

F-4-2

F-5-2

60"X78" SLIDE GATE

54"X78" SLIDE GATE

SCREEN NO. 1

F-5-4

54"X84" SLIDE GATE

EL. 742'-0"

EL. 741'-0"

EL. 739'-6"

F-4-1

F-5-1

60"X78" SLIDE GATE

SCREEN NO. 2

F-5-3

54"X84" SLIDE GATE

54"X78" SLIDE GATE

F-6-4

FROM RAW SEWAGE PUMP STATION

60"X72" SLIDE GATE

NEW STATIONARY BAR SCREEN

R-2-1

F-6-1

F-6-2

SOUTH PARTIAL PLAN SHEET P-13B

EMERGENCY BYPASS CHANNEL

EL. 741'-6"

F-6-3

R-1-2

NEW HYDRO-DYNE SOUTH CHANNEL BAR SCREEN

48" DIA. SLIDE GATE

R-1-1

R-3-1

F-8-1

F-8-2

EL. 742'-0"

SCREEN NO. 3

EXISTING 21" BYPASS PIPE BELOW

24" DIA. SLIDE GATE

F-8-6

F-8-3

F-8-5

F-8-4

FROM DOWN RIVER SEWER SYSTEM

SEE SOUTH CHANNEL STRUCTURAL MODIFICATIONS SHEET S-4A

EL. 734'-6"

EXISTING 4" DI LOWER ALCOVE SUMP PUMP PIPING (TYP.)

7 P-21

GRIT PUMP NO. 1

SEAL WATER PANEL PUMP NO. 1

2" SOLENOID

NEW SUBMERSIBLE SUMP PUMP (TYP.-2) REFER TO SPECIFICATION 11133

CONNECT NEW SUMP PUMP TO EXISTING 4" DISCHARGE PIPING AND VALVES (TYP-4.)

GRIT PUMP NO. 2

SEAL WATER PANEL PUMP NO. 2

6 P-18

GRIT COLLECTOR No. 1

EL. 728'-6"

S-7-1

NEW 96"X78" SLIDE GATE

SEE PARTIAL PLAN SHEET P-17

72"X84" SLIDE GATE

F-3-1

EFFLUENT WEIR, TYP

W-1

EL. 734'-6"

S-6-2

54" PIPE

60"X66" SLIDE GATE

1 P-14B

F-1-2

96"X78" SLIDE GATE

54" PIPE

60"X66" SLIDE GATE

F-7-1

EL. 738'-6"

5 P-16

ABANDON EXISTING CHANNEL DRAIN MUD VALVE IN PLACE (TYP.)

SEE PARTIAL PLAN SHEET P-17

EL. 741'-6"

GRIT COLLECTOR No. 2

F-1-3

96"X78" SLIDE GATE

R-9-1

EL. 740'-10"

EL. 734'-6"

EFFLUENT WEIR, TYP

F-2-1

S-6-1

54" PIPE

96"X72" SLIDE GATE

60"X66" SLIDE GATE

2 P-14B

N

SECTIONAL PLAN @ ELEV. 743

SCALE: 1/4" = 1'-0"

0 1 2 4 8

SCALE IN FEET

FOR TRUE SCALE PLOT THIS SHEET TO 34" X 22" PAPER SIZE

811 Know what's below. Call before you dig.

REV.	DESCRIPTION	DATE	DRAWN	CHECKED
	ISSUED FOR BIDS SET	12-13-2021		
	90% DESIGN SUBMITTAL	11-22-2021		
	70% DESIGN SUBMITTAL	10-29-2021		
	50% DESIGN SUBMITTAL	10-01-2021		

CITY OF ANN ARBOR
PUBLIC SERVICES
301 EAST HURON STREET
P.O. BOX 8647
ANN ARBOR, MI 48107-8647
(734) 794-6430
www.a2gov.org

PROJECT MANAGEMENT - PUBLIC SERVICES - CITY OF ANN ARBOR

HEADWORKS IMPROVEMENTS PROJECT

HEADWORKS BUILDING

PLAN ELEV. 743 (HYDRO-DYNE)

SCALE: AS NOTED

DRAWING No. 532

SHEET No. P-11B

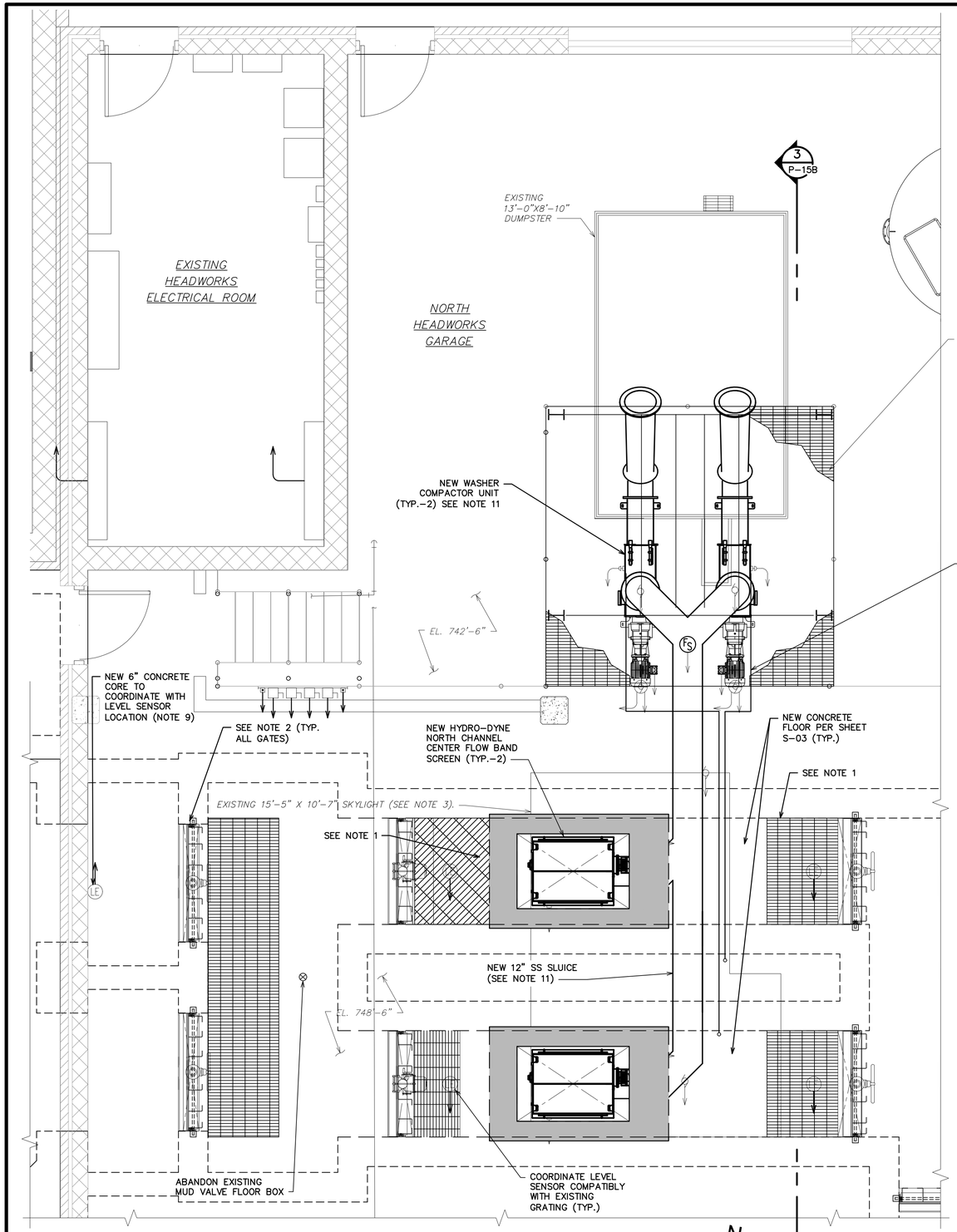

PARTIAL PLAN @ ELEV. 749 (OPERATOR FLOOR) – NORTH SCREENING AREA

SCALE: 3/8" = 1'-0"

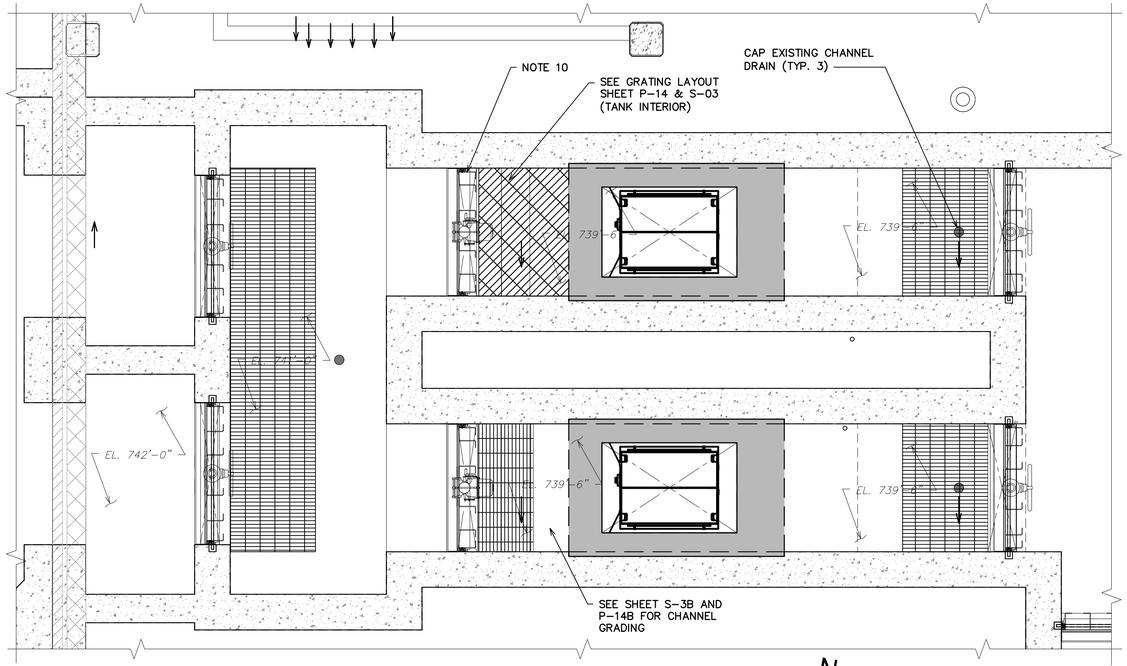

PARTIAL PLAN @ ELEV. 743 – NORTH SCREENING AREA

SCALE: 3/8" = 1'-0"

GENERAL NOTES:

1. REFER TO STRUCTURAL SHEETS DS-02 TO DS-06 AND S-01 THROUGH S-06 FOR ALL STRUCTURAL MODIFICATIONS AND REPAIRS WITHIN THE SCREENING CHANNELS.

2. PROTECT ALL EXISTING GATES, ACTUATORS, ELECTRICAL CONDUITS, ETC. AND ENSURE THEY REMAIN IN SERVICE DURING CONSTRUCTION PROCESS.

3. SKYLIGHTS TO BE REMOVED AND REINSTALLED TO ALLOW FOR INSTALLATION OF NEW SCREENING EQUIPMENT.REFER TO SPECIFICATION 01950- SEQUENCE OF CONSTRUCTION.

4. INSTALL TWO 4.5' WIDE (NORTH CHANNELS) HYDRO-DYNE FLEXRAKE SCREENS PER MANUFACTURER INSTRUCTIONS. SEE SPECIFICATION 11350 – SCREENING EQUIPMENT FOR MORE INFORMATION.

5. COORDINATE SCREEN INSTALLATION WITH MANUFACTURER STRUCTURAL ANCHOR REQUIREMENTS, ALSO FOR ADDITIONAL REQUIREMENTS SEE SHEET S-15.

6. CONTRACTOR TO COORDINATE GRATING DIMENSIONS WITH FINAL PLACEMENT OF SCREEN AND SCREEN COVER ASSEMBLY.

7. CONNECT NEW 4" MUD VALVES TO EXISTING 4" CHANNEL DRAINAGE PIPING.

8. CONTRACTOR TO PROTECT EXISTING STAINLESS STEEL, EQUIPMENT PLATFORM AND HANDRAIL THROUGHOUT CONSTRUCTION.

9. FINAL CONCRETE CORE HOLE AND GRATING OPENING SIZE TO BE COORDINATED WITH LEVEL SENSOR MANUFACTURER.

10. ALL EXISTING ISOLATION GATES REQUIRED FOR CONSTRUCTION ISOLATION REQUIRE SEAL REPLACEMENT PRIOR TO CONSTRUCTION.

11. REFER TO ELECTRICAL SHEETS FOR ALL ELECTRICAL MODIFICATIONS.

12. REFER TO SPECIFICATION 15060 – EXPOSED PROCESS PIPE AND SPECIFICATION 15100 – VALVES NEW PEW PIPING, WASHER COMPACTOR DRAIN PIPING, SOLENOID VALVE, ISOLATION VALVE, ETC. REQUIREMENTS.

811 Know what's below. Call before you dig.

REV.	DESCRIPTION	DATE	DRAWN	CHECKED
	50% DESIGN SUBMITTAL	10-01-2021		
	70% DESIGN SUBMITTAL	10-29-2021		
	90% DESIGN SUBMITTAL	11-22-2021		
	ISSUED FOR BIDS SET	12-13-2021		

CITY OF ANN ARBOR
PUBLIC SERVICES
301 EAST HURON STREET
P.O. BOX 8647
ANN ARBOR, MI 48107-8647
734.794.6410
www.a2gov.org

PROJECT MANAGEMENT - PUBLIC SERVICES - CITY OF ANN ARBOR

HEADWORKS IMPROVEMENTS PROJECT

HEADWORKS BUILDING
NORTH SCREENING AREA PARTIAL PLANS
(HYDRO-DYNE)

SCALE: AS NOTED

DRAWING No.: 534

SHEET No.: P-12B

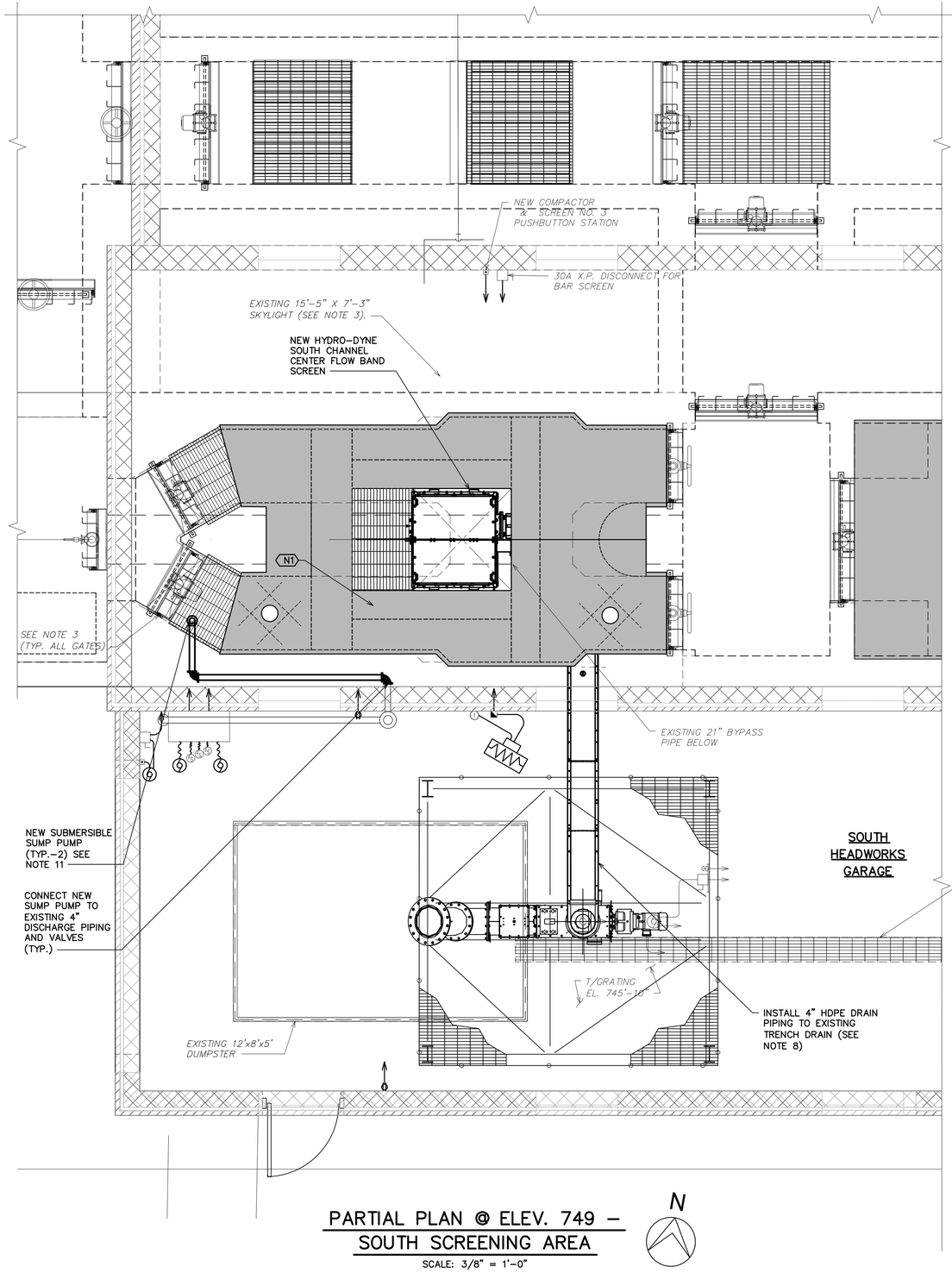

PARTIAL PLAN @ ELEV. 749 – SOUTH SCREENING AREA

SCALE: 3/8" = 1'-0"

N

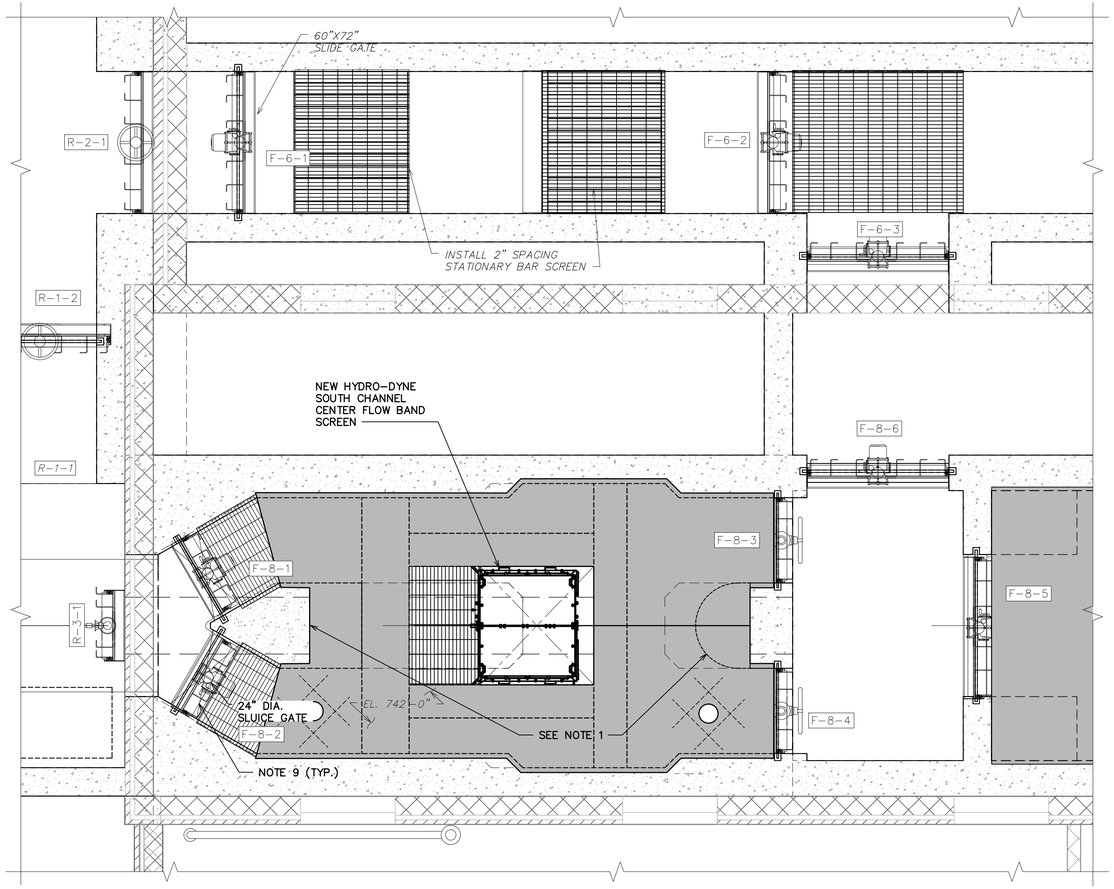

PARTIAL PLAN @ ELEV. 743 – SOUTH SCREENING AREA

SCALE: 3/8" = 1'-0"

N

GENERAL NOTES

1. REFER TO STRUCTURAL DEMO SHEETS AND STRUCTURAL SHEETS S-02 THROUGH S-06 FOR ALL STRUCTURAL MODIFICATIONS AND REPAIRS WITHIN THE SCREENING CHANNELS.
2. COORDINATE WALL OPENING TO ACCOMMODATE SOUTH CHANNEL SCREEN 3 WITH EXISTING WALL OPENING ON SHEET DP-02, DP-03 AND ARCHITECTURAL SHEETS.
3. PROTECT ALL EXISTING GATES, ACTUATORS, ELECTRICAL CONDUITS, ETC. AND ENSURE THEY REMAIN IN SERVICE THROUGHOUT CONSTRUCTION.
4. SKYLIGHTS SHALL BE REMOVED AND REINSTALLED TO ALLOW FOR INSTALLATION OF NEW SCREENING EQUIPMENT.
5. INSTALL ONE 4.5' WIDE (SOUTH CHANNEL) HYDRO-DYNE FLEXRAKE SCREEN PER MANUFACTURER INSTRUCTIONS. SEE SPECIFICATION 11350A – SCREENING EQUIPMENT FOR MORE INFORMATION.
6. COORDINATE SCREEN INSTALLATION WITH STRUCTURAL ANCHOR REQUIREMENTS, SEE SHEET S-XX.
7. REFER TO SPECIFICATION 15060 – EXPOSED PROCESS PIPE AND SPECIFICATION 15100 – VALVES NEW PEW PIPING, WASHER COMPACTOR DRAIN PIPING, SOLENOID VALVE, ISOLATION VALVE, ETC. REQUIREMENTS.
8. FINAL CONCRETE CORE HOLE AND GRATING OPENING SIZE TO BE COORDINATED WITH LEVEL SENSOR MANUFACTURER.
9. ALL EXISTING ISOLATION GATES REQUIRED FOR CONSTRUCTION ISOLATION REQUIRE SEAL REPLACEMENT PRIOR TO CONSTRUCTION.
10. REFER TO SPECIFICATION 11133 – SUBMERSIBLE SUMP PUMP FOR DETAILED INFORMATION ON SUMP PUMP REQUIREMENTS.
11. REFER TO ELECTRICAL SHEETS FOR ALL ELECTRICAL MODIFICATIONS.

811 Know what's below. Call before you dig.

REV.	DESCRIPTION	DATE	DRAWN	CHECKED
	ISSUED FOR BIDS SET	12-13-2021		
	90% DESIGN SUBMITTAL	11-22-2021		
	70% DESIGN SUBMITTAL	10-29-2021		
	50% DESIGN SUBMITTAL	10-01-2021		

CITY OF ANN ARBOR
PUBLIC SERVICES
301 EAST HURON STREET
P.O. BOX 8647
ANN ARBOR, MI 48107-8647
(734) 794-6410
www.a2gov.org

PROJECT MANAGEMENT - PUBLIC SERVICES - CITY OF ANN ARBOR

HEADWORKS IMPROVEMENTS PROJECT

HEADWORKS BUILDING
SOUTH SCREENING AREA
PARTIAL PLANS (HYDRO-DYNE)

SCALE: AS NOTED

DRAWING No. 536

SHEET No. P-13B

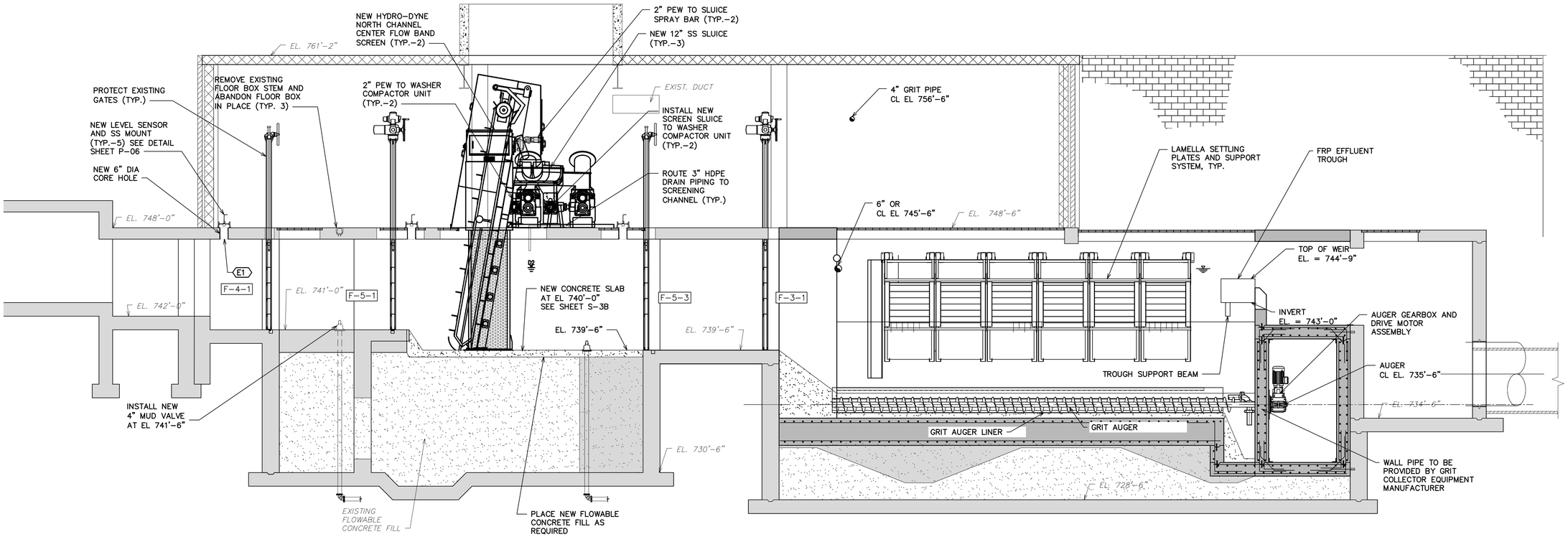

HEADWORKS NORTH CHANNEL SECTION 1

SCALE: 1/4" = 1'-0"

P-10B

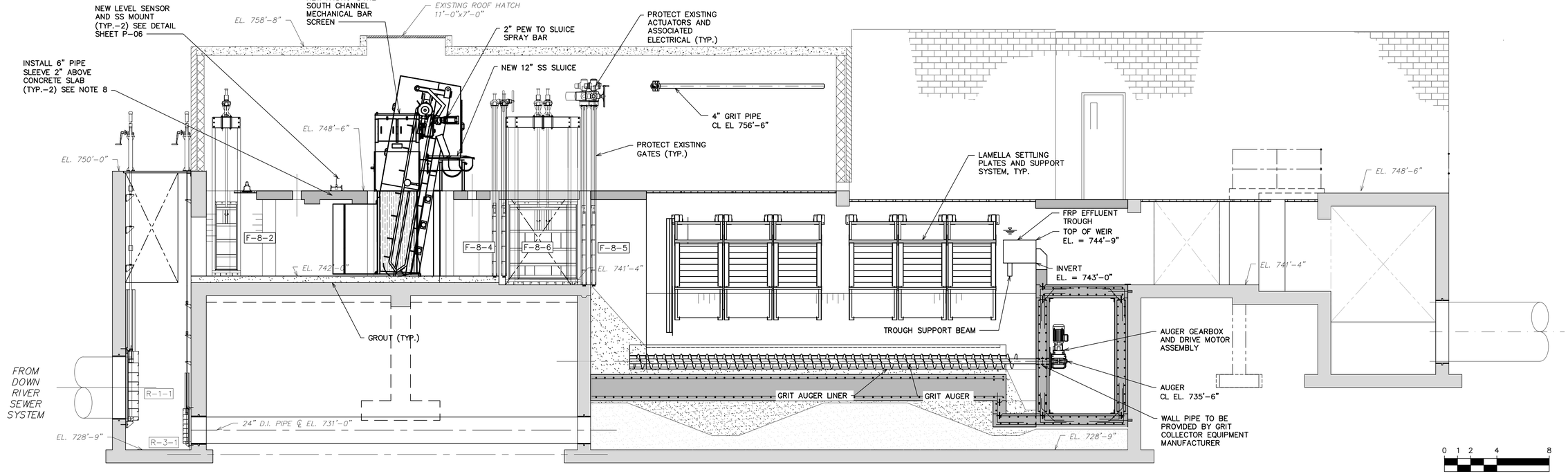

HEADWORKS SOUTH CHANNEL SECTION 2

SCALE: 1/4" = 1'-0"

P-10B

0 1 2 4 8

SCALE IN FEET

FOR TRUE SCALE PLOT THIS SHEET TO 34" X 22" PAPER SIZE

811 Know what's below. Call before you dig.

REV.	DESCRIPTION	DATE	DRAWN	CHECKED
	ISSUED FOR BIDS SET	12-13-2021		
	90% DESIGN SUBMITTAL	11-22-2021		
	70% DESIGN SUBMITTAL	10-29-2021		
	50% DESIGN SUBMITTAL	10-01-2021		

CITY OF ANN ARBOR
PUBLIC SERVICES
301 E. HURON STREET
P.O. BOX 8647
ANN ARBOR, MI 48107-8647
(734) 794-6430
www.a2gov.org

PROJECT MANAGEMENT - PUBLIC SERVICES - CITY OF ANN ARBOR

HEADWORKS IMPROVEMENTS PROJECT

HEADWORKS BUILDING
NORTH AND SOUTH TRAIN
SECTIONS (HYDRO-DYNE)

SCALE: AS SHOWN

DRAWING No. 538

SHEET No. P-14B

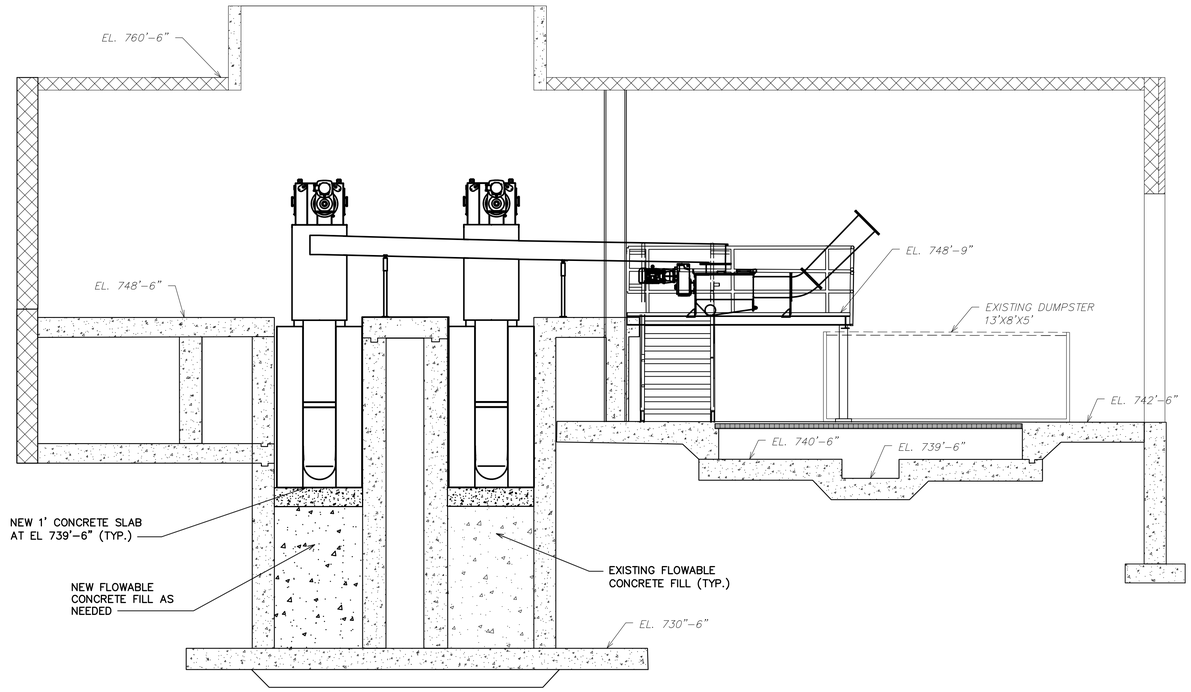

NORTH SCREENING SECTION 3 P-12B

SCALE: 3/8" = 1'-0"

GENERAL NOTES

1. REFER TO STRUCTURAL DEMO SHEETS AND STRUCTURAL SHEETS S-02 THROUGH S-06 FOR ALL STRUCTURAL MODIFICATIONS AND REPAIRS WITHIN THE SCREENING CHANNELS.
2. COORDINATE WALL OPENING TO ACCOMMODATE SOUTH CHANNEL SCREEN 3 WITH EXISTING WALL OPENING ON SHEET DP-02, DP-03 AND ARCHITECTURAL SHEETS.
3. PROTECT ALL EXISTING GATES, ACTUATORS, ELECTRICAL CONDUITS, ETC. AND ENSURE THEY REMAIN IN SERVICE THROUGHOUT CONSTRUCTION.
4. SKYLIGHTS SHALL BE REMOVED AND REINSTALLED TO ALLOW FOR INSTALLATION OF NEW SCREENING EQUIPMENT.
5. INSTALL ONE 4.5' WIDE (SOUTH CHANNEL) DUPERON FLEXRAKE SCREEN PER MANUFACTURER INSTRUCTIONS. SEE SPECIFICATION 11350A – SCREENING EQUIPMENT FOR MORE INFORMATION.
6. COORDINATE SCREEN INSTALLATION WITH STRUCTURAL ANCHOR REQUIREMENTS, SEE SHEET S-XX.
7. REFER TO SPECIFICATION 15060 – EXPOSED PROCESS PIPE AND SPECIFICATION 15100 – VALVES NEW PEW PIPING, WASHER COMPACTOR DRAIN PIPING, SOLENOID VALVE, ISOLATION VALVE, ETC. REQUIREMENTS.
8. FINAL CONCRETE CORE HOLE AND GRATING OPENING SIZE TO BE COORDINATED WITH LEVEL SENSOR MANUFACTURER.
9. ALL EXISTING ISOLATION GATES REQUIRED FOR CONSTRUCTION ISOLATION REQUIRE SEAL REPLACEMENT PRIOR TO CONSTRUCTION.
10. REFER TO SPECIFICATION 11133 – SUBMERSIBLE SUMP PUMP FOR DETAILED INFORMATION ON SUMP PUMP REQUIREMENTS.
11. REFER TO ELECTRICAL SHEETS FOR ALL ELECTRICAL MODIFICATIONS.

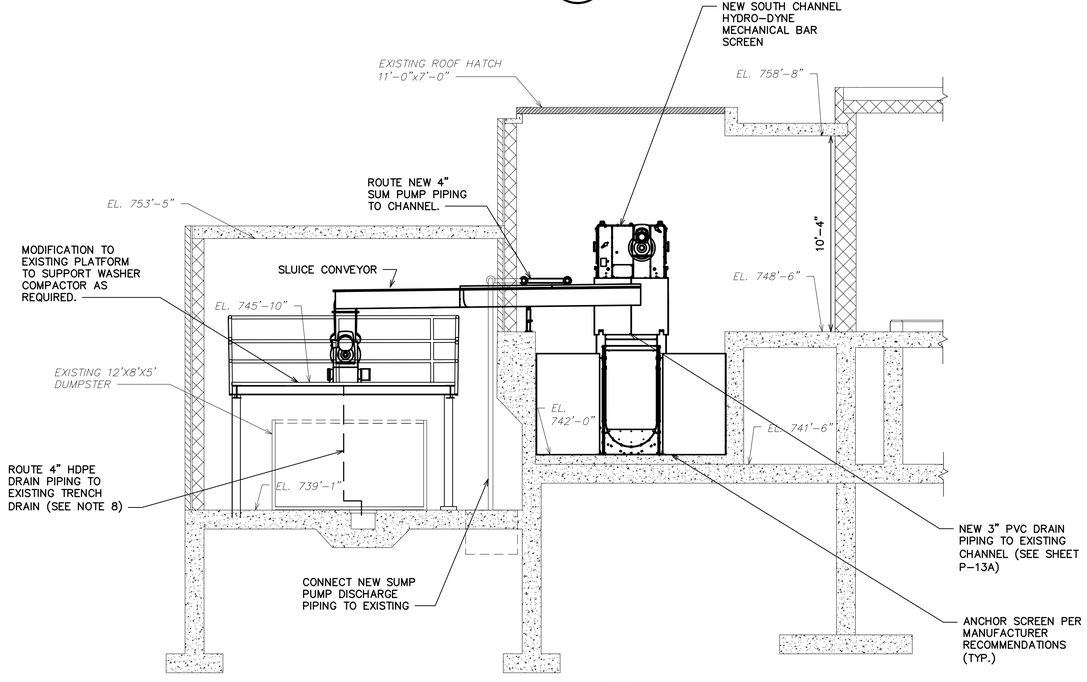

SOUTH SCREENING SECTION 4 P-13B

SCALE: 1/4" = 1'-0"

0 1 2 4 8

SCALE IN FEET

FOR TRUE SCALE PLOT THIS SHEET TO 34" X 22" PAPER SIZE

811 Know what's below. Call before you dig.

REV.	DESCRIPTION	DATE	DRAWN	CHECKED
	50% DESIGN SUBMITTAL	10-01-2021		
	70% DESIGN SUBMITTAL	10-29-2021		
	90% DESIGN SUBMITTAL	11-22-2021		
	ISSUED FOR BIDS SET	12-13-2021		

CITY OF ANN ARBOR
PUBLIC SERVICES
301 EAST HURON STREET
P.O. BOX 8647
ANN ARBOR, MI 48107-8647
734.794.6410
www.a2gov.org

PROJECT MANAGEMENT - PUBLIC SERVICES - CITY OF ANN ARBOR

HEADWORKS IMPROVEMENTS PROJECT

HEADWORKS BUILDING
NORTH AND SOUTH
SCREENING SECTIONS (HYDRO-DYNE)

SCALE: AS SHOWN

DRAWING No. 540

SHEET No. P-15B

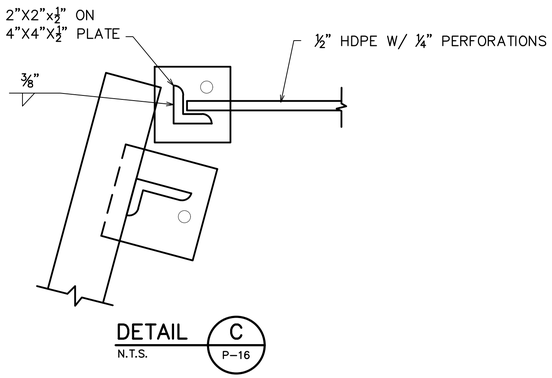

DETAIL C (P–16)
N.T.S.

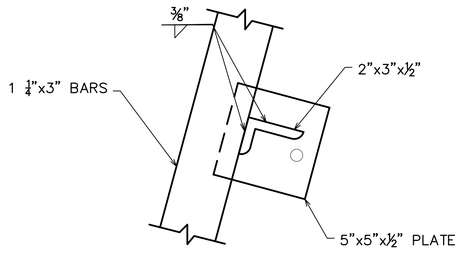

DETAIL B (P–16)
N.T.S.

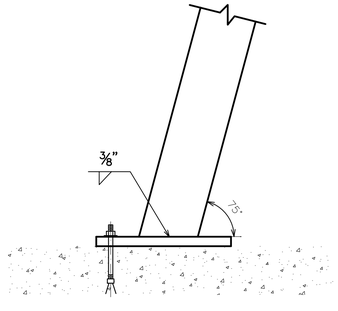

DETAIL A (P–16)
N.T.S.

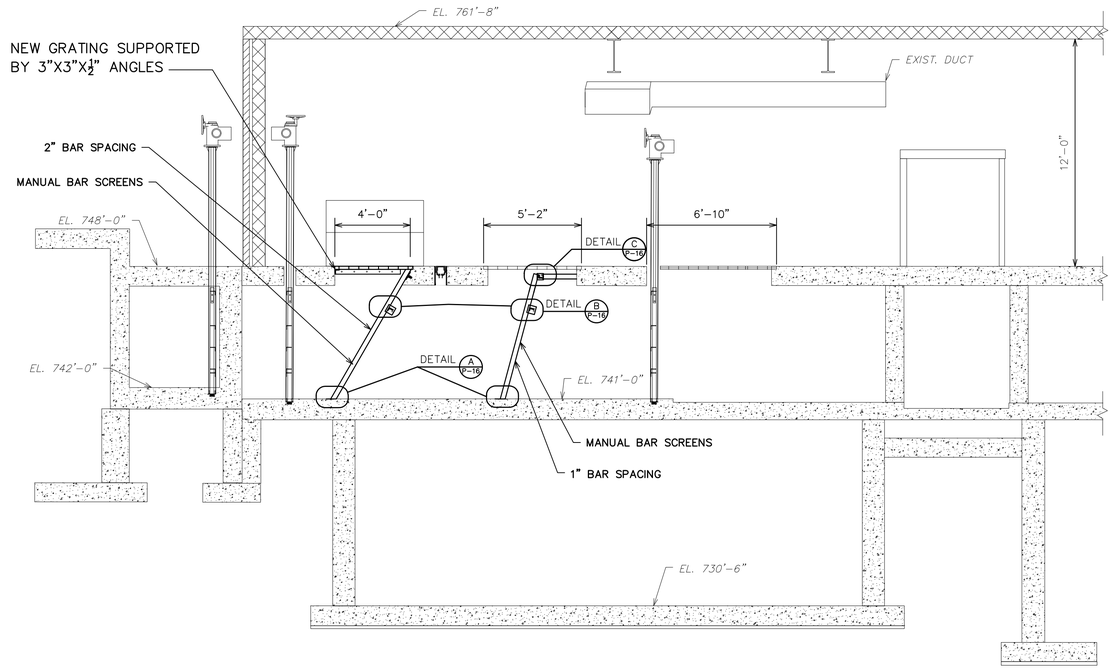

EMERGENCY BYPASS CHANNEL SECTION 7 (P–10)

NOTES

1. ALL FERROUS MATERIALS SHALL BE 316 SS.
2. HDPE PERFORATED PLATE SHALL HAVE ¾" DRAINAGE HOLES STAGGERED 1" APART.

0 1 2 4 8
SCALE IN FEET

FOR TRUE SCALE PLOT THIS SHEET TO 34" X 22" PAPER SIZE

811 Know what's below. Call before you dig.

REV.	DESCRIPTION	DATE	DRAWN	CHECKED
	ISSUED FOR BIDS SET	12–13–2021		
	90% DESIGN SUBMITTAL	11–22–2021		
	70% DESIGN SUBMITTAL	10–29–2021		
	50% DESIGN SUBMITTAL	10–01–2021		

CITY OF ANN ARBOR
PUBLIC SERVICES
301 EAST HURON STREET
P.O. BOX 8647
ANN ARBOR, MI 48107-8647
(734) 794-6410
www.a2gov.org

PROJECT MANAGEMENT - PUBLIC SERVICES - CITY OF ANN ARBOR

HEADWORKS IMPROVEMENTS PROJECT
HEADWORKS BUILDING
EMERGENCY BYPASS CHANNEL
SECTION

SCALE: AS SHOWN
DRAWING No.: 540
SHEET No.: P–16

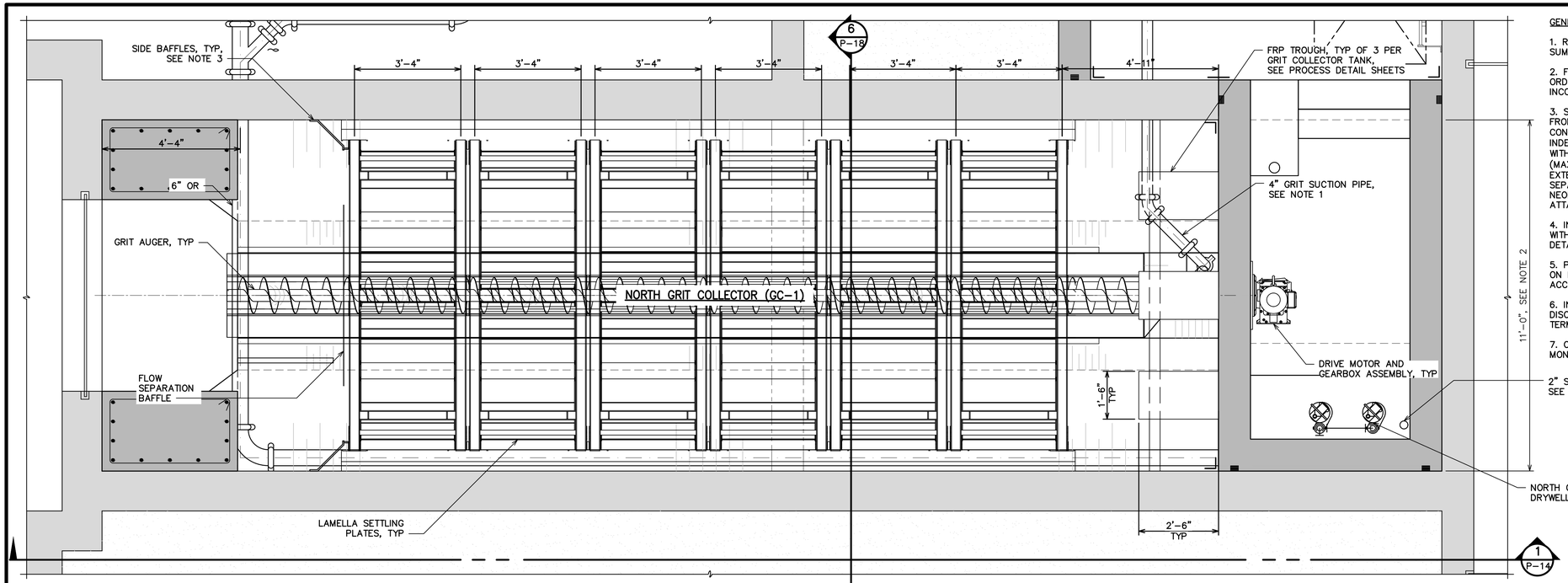

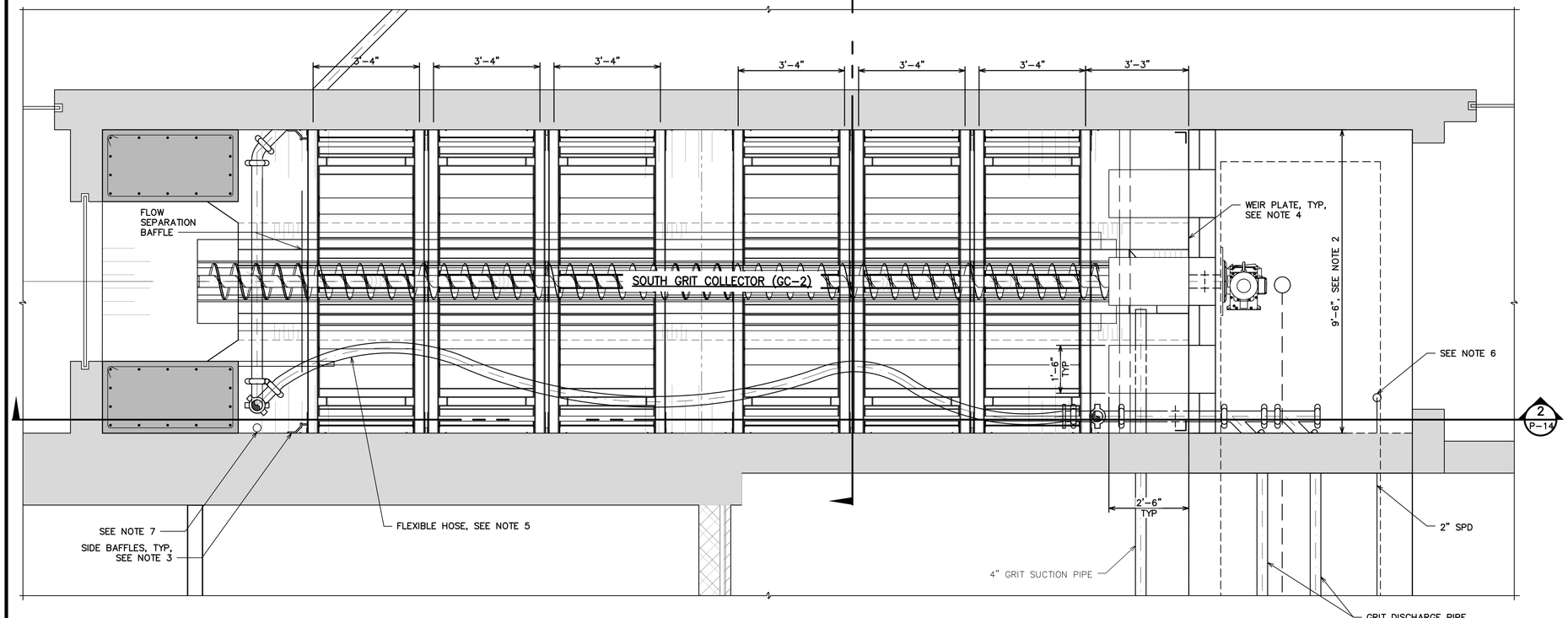

PLAN

SCALE: 1/2" = 1'-0"

1/2" = 1'- 0"

0 1 2 4

GENERAL NOTES:

1. ROLL 45-DEGREE FITTINGS TO DIRECT SUCTION PIPING INTO CENTER OF SUMP.

2. FIELD MEASURE AND CONFIRM EXISTING TANK DIMENSIONS PRIOR TO ORDERING THE GRIT REMOVAL EQUIPMENT. NOTIFY ENGINEER OF ANY INCONSISTENCIES.

3. SIDE BAFFLES SHALL BE FABRICATED BY THE CONTRACTOR WITH DIRECTION FROM GRIT REMOVAL MANUFACTURER AND ENGINEER. BAFFLES SHALL BE CONSTRUCTED OF 12 GA (MIN.) 304SST MATERIAL AND SUPPORTED INDEPENDENTLY FROM GRIT REMOVAL EQUIPMENT. ANCHOR BAFFLES TO WALL WITH SOLID ANGLE AND 3/8" (MIN.) DIAMETER BOLTS WITH 12" SPACING (MAX.). TOP OF SIDE BAFFLE SHALL MATCH TOP OF LAMELLA PLATES AND EXTEND TO TANK INVERT. MANUFACTURER REQUIRES A FEW INCHES OF SEPARATION BETWEEN THE EDGE OF BAFFLE AND LAMELLAS. FURNISH NEOPRENE STRIP ALONG THE EDGE OF THE BAFFLE TO FILL THIS SPACE. ATTACH NEOPRENE TO BAFFLE WITH 316 SST BOLTS AND WASHERS.

4. INSTALL WEIR PLATES ALONG TANK EFFLUENT WALL. COORDINATE LOCATION WITH TROUGHS. SEE PROCESS DETAIL SHEETS FOR WEIR PLATE AND TROUGH DETAILS.

5. PROVIDE 4-INCH FLEXIBLE HOSE WITH STAINLESS STEEL CAM-LOCK FITTINGS ON EACH END. LOCATE CAM-LOCKS WITHIN 1-FT OF TANK TOP OF WALL, FOR ACCESS. HOSE SHALL BE MANUFACTURED BY ALFA GOMMA, OR EQUAL.

6. INSTALL WALL PIPE IN TOP SLAB OF ROOM TO ROUTE SUMP PUMP DISCHARGE PIPE THROUGH. PROVIDE INCREASER FITTINGS AS REQUIRED. TERMINATION DISCHARGE AT ELEV 746.50 WITH 90 DEGREE BEND FACING EAST.

7. CONTRACTOR SHALL MODIFY EXISTING ROOF DRAIN TO AVOID CONFLICT WITH MONORAIL.

811 Know what's below. Call before you dig.

REV.	DESCRIPTION	DATE	DRAWN	CHECKED
	ISSUED FOR BIDS SET	12-13-2021		
	90% DESIGN SUBMITTAL	11-22-2021		
	70% DESIGN SUBMITTAL	10-29-2021		
	50% DESIGN SUBMITTAL	10-01-2021		

CITY OF ANN ARBOR
PUBLIC SERVICES
301 EAST HURON STREET
P.O. BOX 8647
ANN ARBOR, MI 48107-8647
734.794.6410
www.a2gov.org

PROJECT MANAGEMENT - PUBLIC SERVICES - CITY OF ANN ARBOR

HEADWORKS IMPROVEMENTS PROJECT

PARTIAL PLAN OF GRIT CHAMBWES AT EL 742.0

SCALE 1/2" = 1'-0"

DRAWING No. 550

SHEET No. P-17

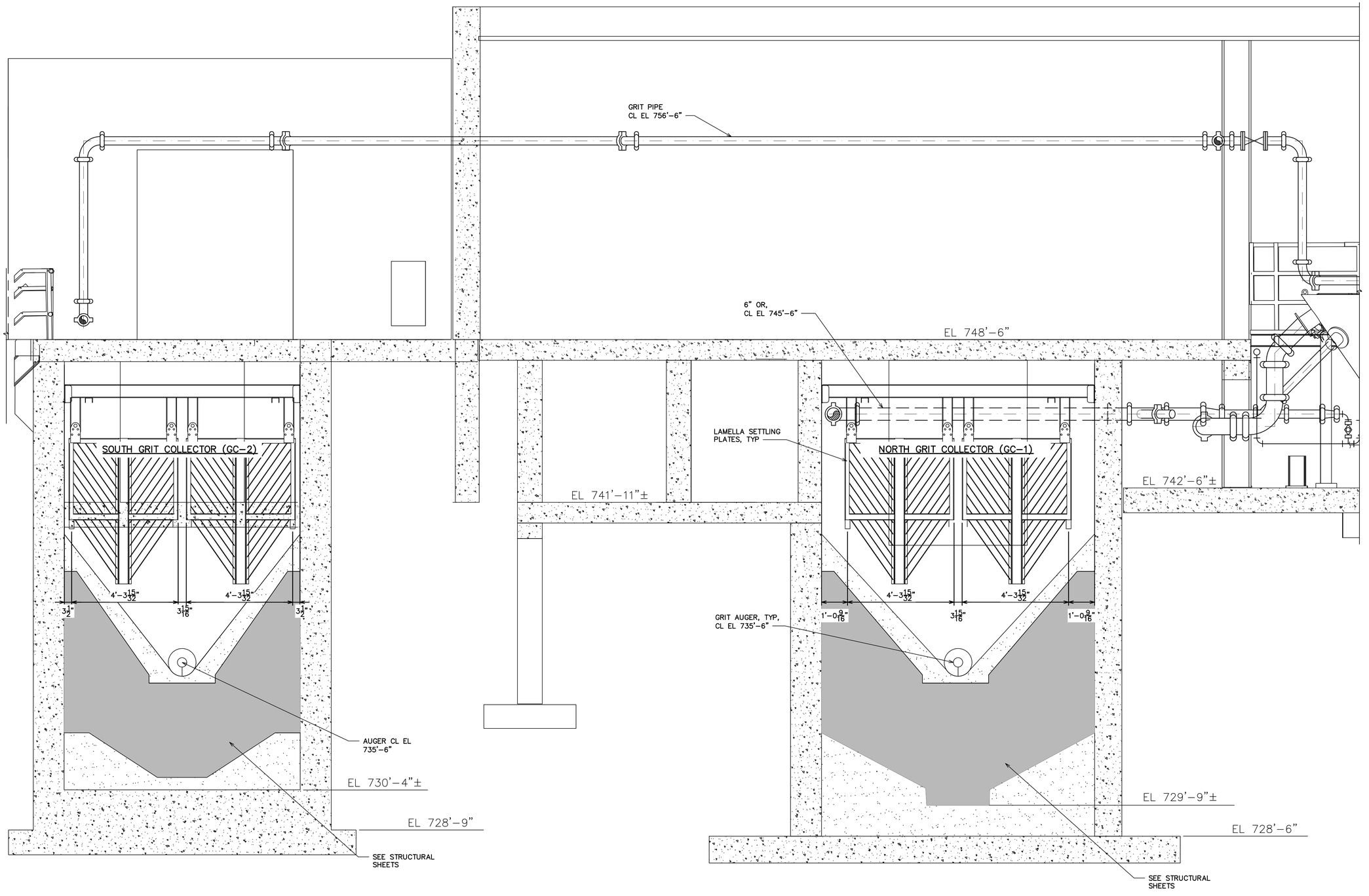

SECTION 6 (P-17)
SCALE: 1/2" = 1'-0"

1/2" = 1'- 0" 0 1 2 4

811 Know what's below. Call before you dig.

REV.	DESCRIPTION	DATE	DRAWN	CHECKED
	ISSUED FOR BIDS SET	12-13-2021		
	90% DESIGN SUBMITTAL	11-22-2021		
	70% DESIGN SUBMITTAL	10-29-2021		
	50% DESIGN SUBMITTAL	10-01-2021		

CITY OF ANN ARBOR
PUBLIC SERVICES
301 EAST HURON STREET
P.O. BOX 8647
ANN ARBOR, MI 48107-8647
(734) 794-6410
www.a2gov.org

PROJECT MANAGEMENT - PUBLIC SERVICES - CITY OF ANN ARBOR

HEADWORKS IMPROVEMENTS PROJECT

GRIT CHAMBER SECTION 1

SCALE 1/2" = 1'-0"

DRAWING No. 558

SHEET No. P-18

GENERAL NOTES:

1. ALL 90–DEGREE BENDS INSTALLED ON GRIT PIPING SHALL BE LONG RADIUS BENDS.

2. ALL BLIND FLANGES ON GRIT PIPING TEE AND WYE FITTINGS SHALL INCLUDE FLUSHING CONNECTION. SEE SHEET P–07 FOR DETAILS.

3. INSTALL TAPPED ISOLATING RING WITH PRESSURE GAUGE ON ALL PUMP DISCHARGE AND SUCTION PIPING. SEE SHEET I–10 FOR DETAILS.

4. CORE WALL AND INSTALL WALL PIPE PER DETAIL E–3 ON SHEET P–06.

5. CORE WALL TO ROUTE PEW PIPE THROUGH.

6. CONTRACTOR SHALL INSTALL FIRE HOSE CONNECTION AND COORDINATE WITH OWNER

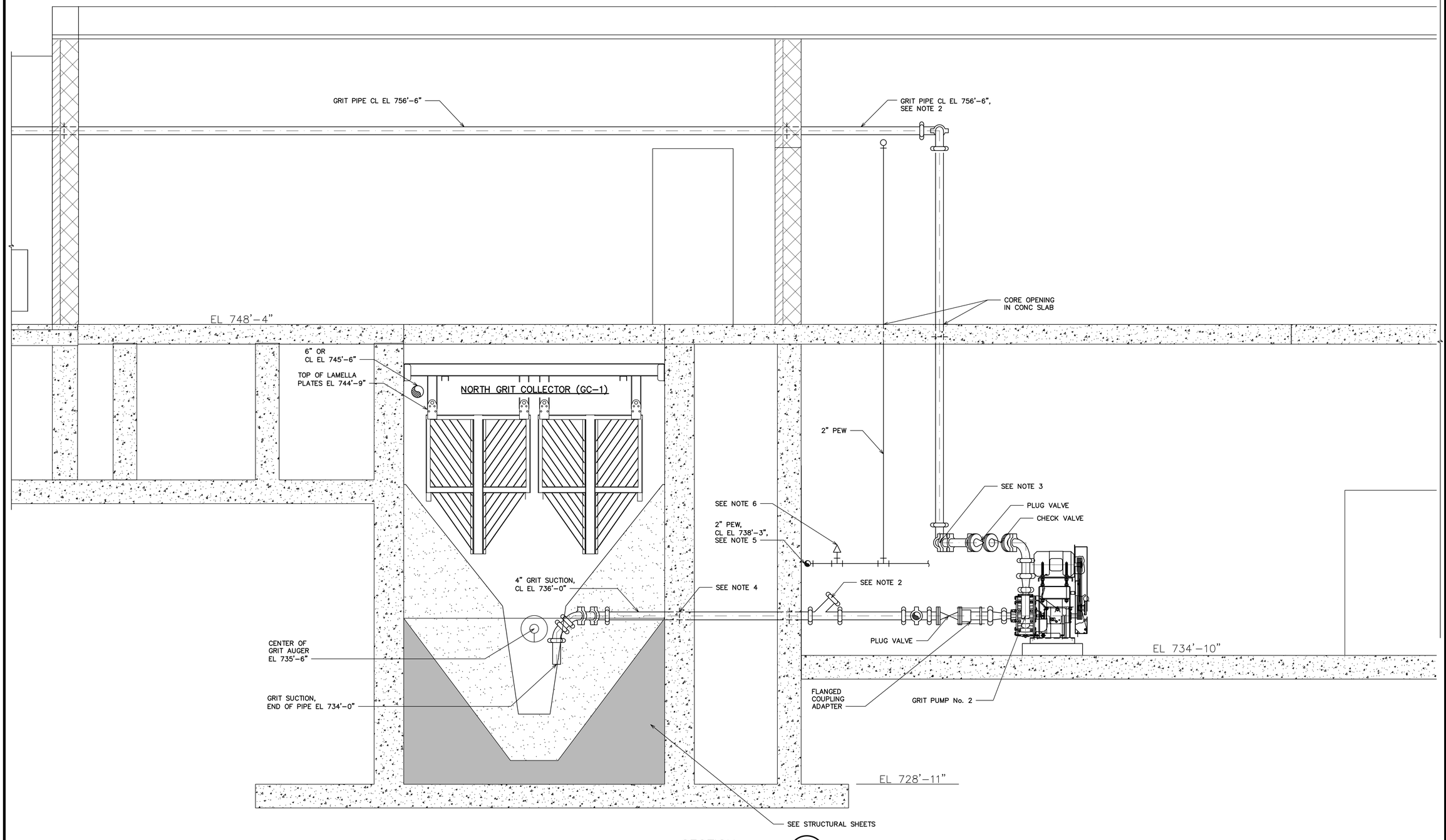

SECTION 7 / P–11
SCALE: 1/2" = 1'–0"

1/2" = 1'– 0" 0 1 2 4

Know what's below. Call before you dig. 811

REV.	DESCRIPTION	DATE	DRAWN	CHECKED
	ISSUED FOR BIDS SET	12–13–2021		
	90% DESIGN SUBMITTAL	11–22–2021		
	70% DESIGN SUBMITTAL	10–29–2021		
	50% DESIGN SUBMITTAL	10–01–2021		

CITY OF ANN ARBOR
PUBLIC SERVICES
301 EAST HURON STREET
P.O. BOX 8647
ANN ARBOR, MI 48107-8647
734.794.6410
www.a2gov.org

PROJECT MANAGEMENT - PUBLIC SERVICES - CITY OF ANN ARBOR

HEADWORKS IMPROVEMENTS PROJECT

GRIT CHAMBER SECTION 2

SCALE 1/2" = 1'–0"

DRAWING No. 560

SHEET No. P–19

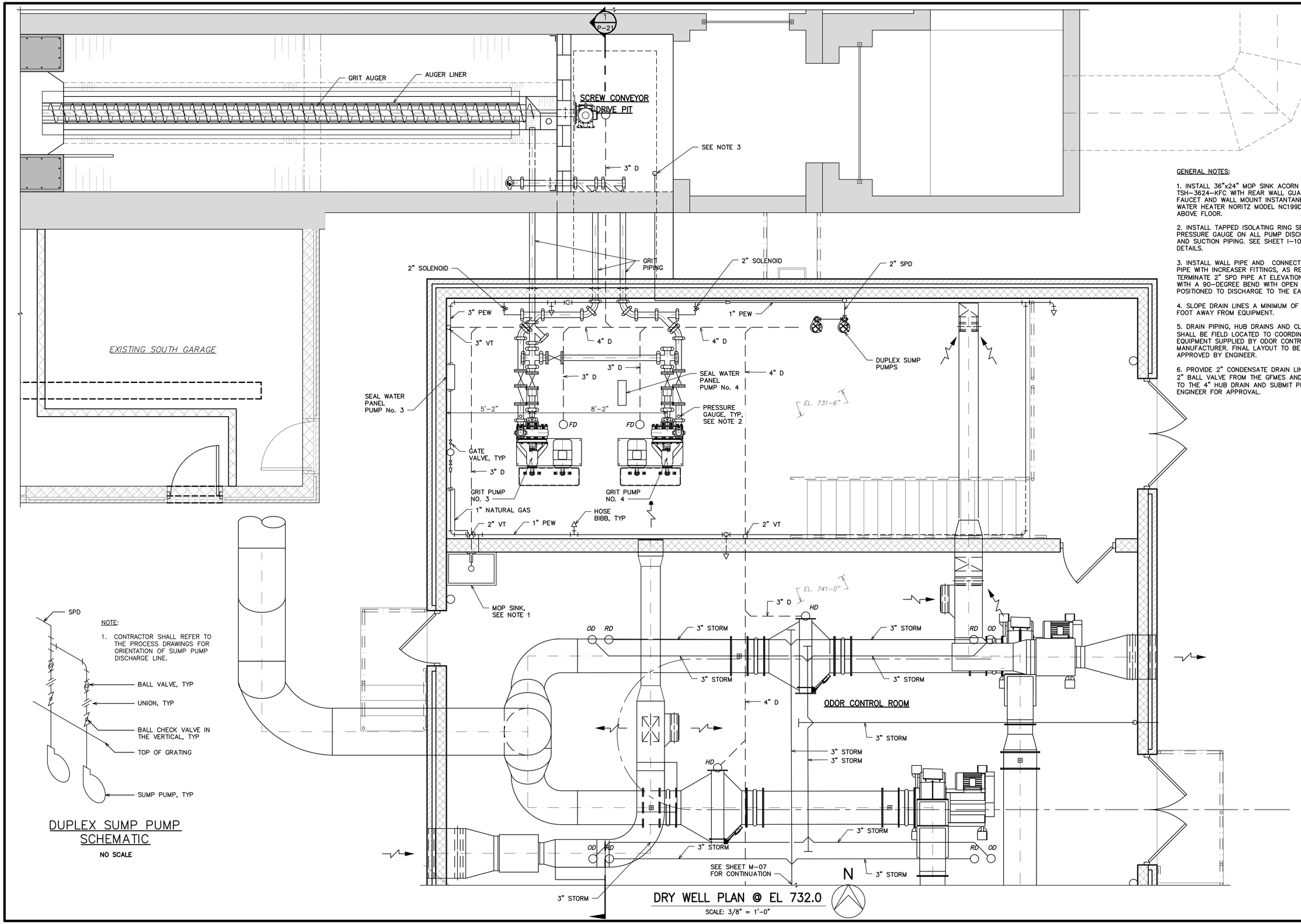

DRY WELL PLAN @ EL 732.0

SCALE: 3/8" = 1'-0"

GENERAL NOTES:

1. INSTALL 36"x24" MOP SINK ACORN MODEL TSH-3624-KFC WITH REAR WALL GUARD FAUCET AND WALL MOUNT INSTANTANEOUS WATER HEATER NORITZ MODEL NC199DVC 7 FT ABOVE FLOOR.

2. INSTALL TAPPED ISOLATING RING SEAL WITH PRESSURE GAUGE ON ALL PUMP DISCHARGE AND SUCTION PIPING. SEE SHEET I-10 FOR DETAILS.

3. INSTALL WALL PIPE AND CONNECT 2" SPD PIPE WITH INCREASER FITTINGS, AS REQUIRED. TERMINATE 2" SPD PIPE AT ELEVATION 746.50 WITH A 90-DEGREE BEND WITH OPEN END POSITIONED TO DISCHARGE TO THE EAST.

4. SLOPE DRAIN LINES A MINIMUM OF 1/4"PER FOOT AWAY FROM EQUIPMENT.

5. DRAIN PIPING, HUB DRAINS AND CLEANOUTS SHALL BE FIELD LOCATED TO COORDINATE W/ EQUIPMENT SUPPLIED BY ODOR CONTROL MANUFACTURER. FINAL LAYOUT TO BE APPROVED BY ENGINEER.

6. PROVIDE 2" CONDENSATE DRAIN LINE WITH 2" BALL VALVE FROM THE GFMES AND FANS TO THE 4" HUB DRAIN AND SUBMIT PIPING TO ENGINEER FOR APPROVAL.

NOTE:

1. CONTRACTOR SHALL REFER TO THE PROCESS DRAWINGS FOR ORIENTATION OF SUMP PUMP DISCHARGE LINE.

DUPLEX SUMP PUMP SCHEMATIC

NO SCALE

811 Know what's below. Call before you dig.

REV.	DESCRIPTION	DATE	DRAWN	CHECKED
	50% DESIGN SUBMITTAL	10-01-2021		
	70% DESIGN SUBMITTAL	10-29-2021		
	90% DESIGN SUBMITTAL	11-22-2021		
	ISSUED FOR BIDS SET	12-13-2021		

CITY OF ANN ARBOR
PUBLIC SERVICES
301 EAST HURON STREET
P.O. BOX 8647
ANN ARBOR, MI 48107-8647
(734) 794-6410
www.a2gov.org

PROJECT MANAGEMENT - PUBLIC SERVICES - CITY OF ANN ARBOR

HEADWORKS IMPROVEMENTS PROJECT

PLAN OF ODOR CONTROL AND GRIT PUMP BUILDING

SCALE N.T.S.

DRAWING No. 562

SHEET No. P-20

PLUMBING FIXTURES

TAG	FIXTURE	MANUFACTURER		CW	HW	TW	WASTE	VENT	ACCESSORIES	NOTES
		MAKE	MODEL	(IN)	(IN)	(IN)	(IN)	(IN)		
FD	FLOOR DRAIN	ZURN	Z415B						8" STRAINER	
RD	ROOF DRAIN	ZURN	Z100	-	-	-	-	-	ALUMINUM DOME	
OD	OVERFLOW DRAIN	ZURN	Z100-89	-	-	-	-	-	2" INTERNAL WATER DAM	
US	UTILITY SINK	ACORN	TSH-3624	1/2	1/2	-	3	2	KFC FAUCET, KH36- 36" HOSE W/ HANGER, 2 SIDE WALL GUARD,	

GENERAL NOTES:

1. CORE OPENING IN WALL. INSTALL WALL PIPE PER DETAIL E1 ON DETAIL SHEET P-06.
2. CORE OPENING IN WALL. INSTALL WALL PIPE PER DETAIL E9 ON DETAIL SHEET P-06.

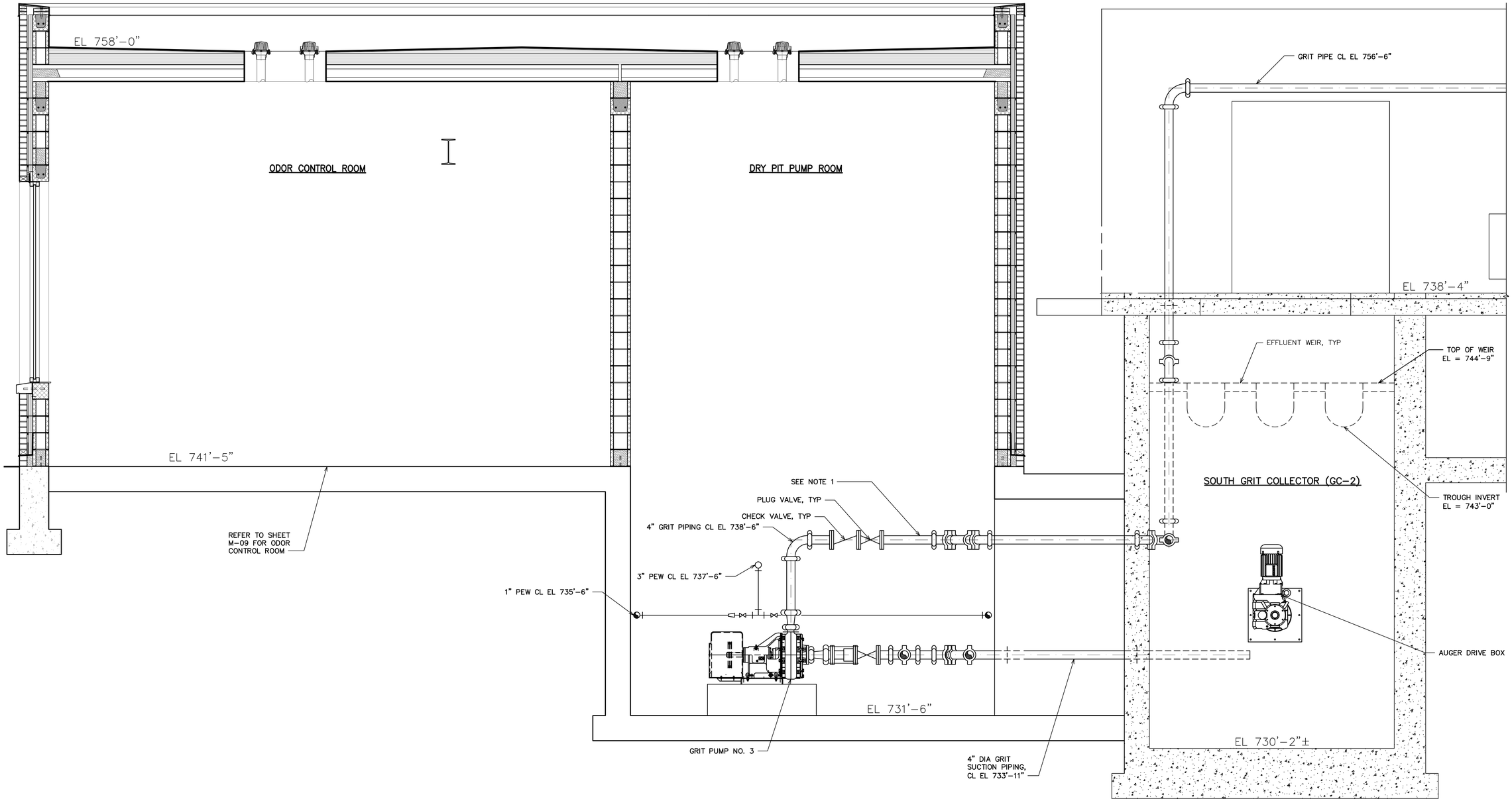

SECTION 1 / P-20
SCALE: 1/4" = 1'-0"

1/2" = 1'- 0" (0, 1, 2, 4)

Know what's below. Call before you dig. 811

REV.	DESCRIPTION	DATE	DRAWN	CHECKED
	ISSUED FOR BIDS SET	12-13-2021		
	90% DESIGN SUBMITTAL	11-22-2021		
	70% DESIGN SUBMITTAL	10-29-2021		
	50% DESIGN SUBMITTAL	10-01-2021		

CITY OF ANN ARBOR
PUBLIC SERVICES
301 EAST HURON STREET
P.O. BOX 8647
ANN ARBOR, MI 48107-8647
(734) 794-6410
www.a2gov.org

PROJECT MANAGEMENT - PUBLIC SERVICES - CITY OF ANN ARBOR

HEADWORKS IMPROVEMENTS PROJECT

SOUTH GRIT CHAMBER SECTION

SCALE 1/2" = 1'-0"

DRAWING No. 564

SHEET No. P-21

GENERAL NOTES:

1. CONTRACTOR SHALL INSTALL FIRE HOSE CONNECTION AND COORDINATE WITH OWNER.

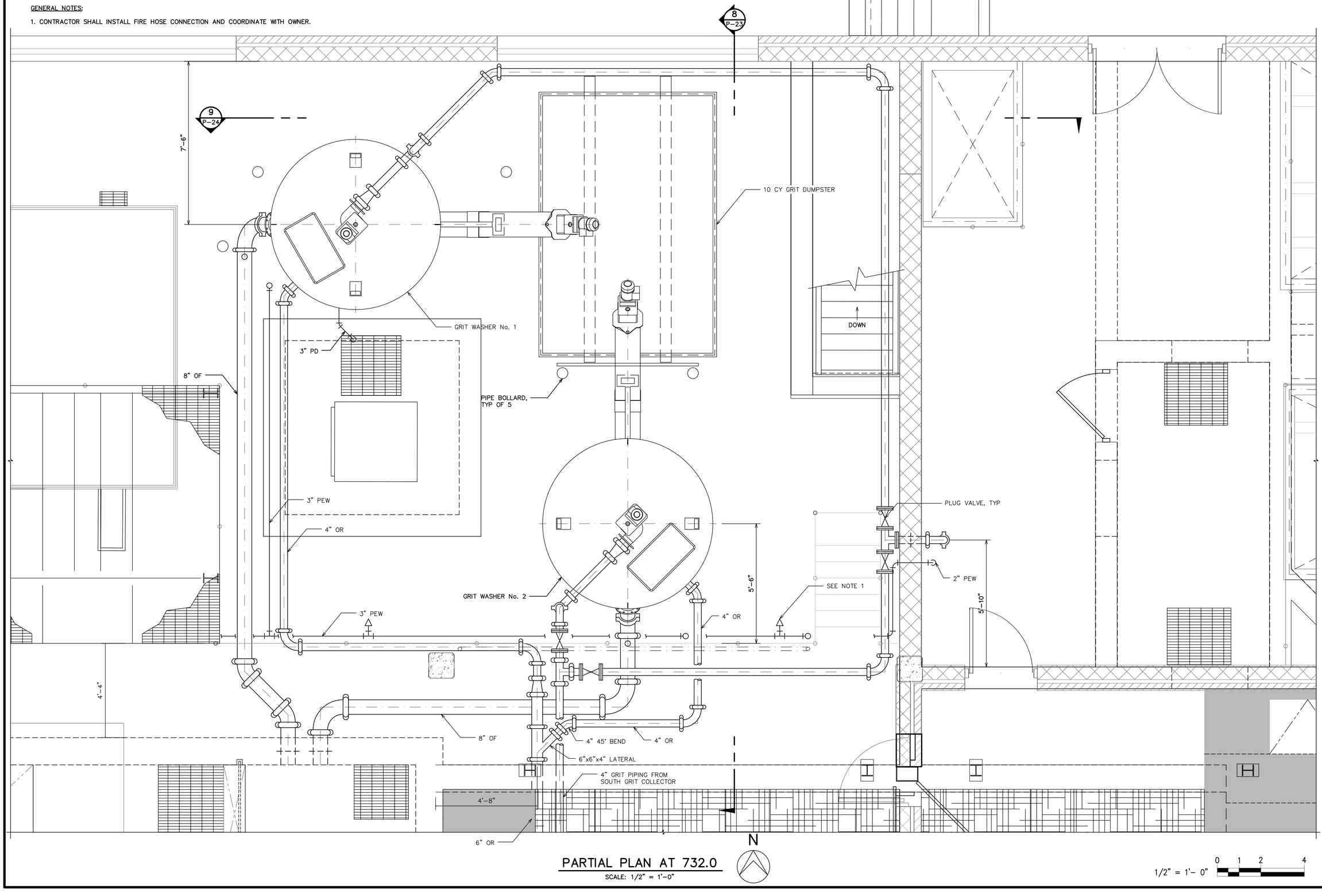

PARTIAL PLAN AT 732.0

SCALE: 1/2" = 1'-0"

1/2" = 1'- 0" 0 1 2 4

811 Know what's below. Call before you dig.

REV.	DESCRIPTION	DATE	DRAWN	CHECKED
	ISSUED FOR BIDS SET	12-13-2021		
	90% DESIGN SUBMITTAL	11-22-2021		
	70% DESIGN SUBMITTAL	10-29-2021		
	50% DESIGN SUBMITTAL	10-01-2021		

CITY OF ANN ARBOR
PUBLIC SERVICES
301 EAST HURON STREET
P.O. BOX 8647
ANN ARBOR, MI 48107-8647
734.794.6410
www.a2gov.org

PROJECT MANAGEMENT - PUBLIC SERVICES - CITY OF ANN ARBOR

HEADWORKS IMPROVEMENTS PROJECT

PARTIAL PLAN OF GRIT WASHERS

SCALE 1/2" = 1'-0"

DRAWING No. 570

SHEET No. P-22

GENERAL NOTES:

1. CORE OPENING IN WALL. INSTALL WALL PIPE PER DETAIL E1 ON DETAIL SHEET P–06, TYP. OF 2.

2. SLOPE DRAIN TO DISCHARGE POINT.

3. USE EXISTING WALL PENETRATION. REPLACE LINK SEALS. TYP. OF 2.

4. ROUTE 3" PROCESS DRAIN (PD) TO EXISTING TRENCH DRAIN AND TERMINATE ABOVE GRATING WITH 90–DEGREE FITTING.

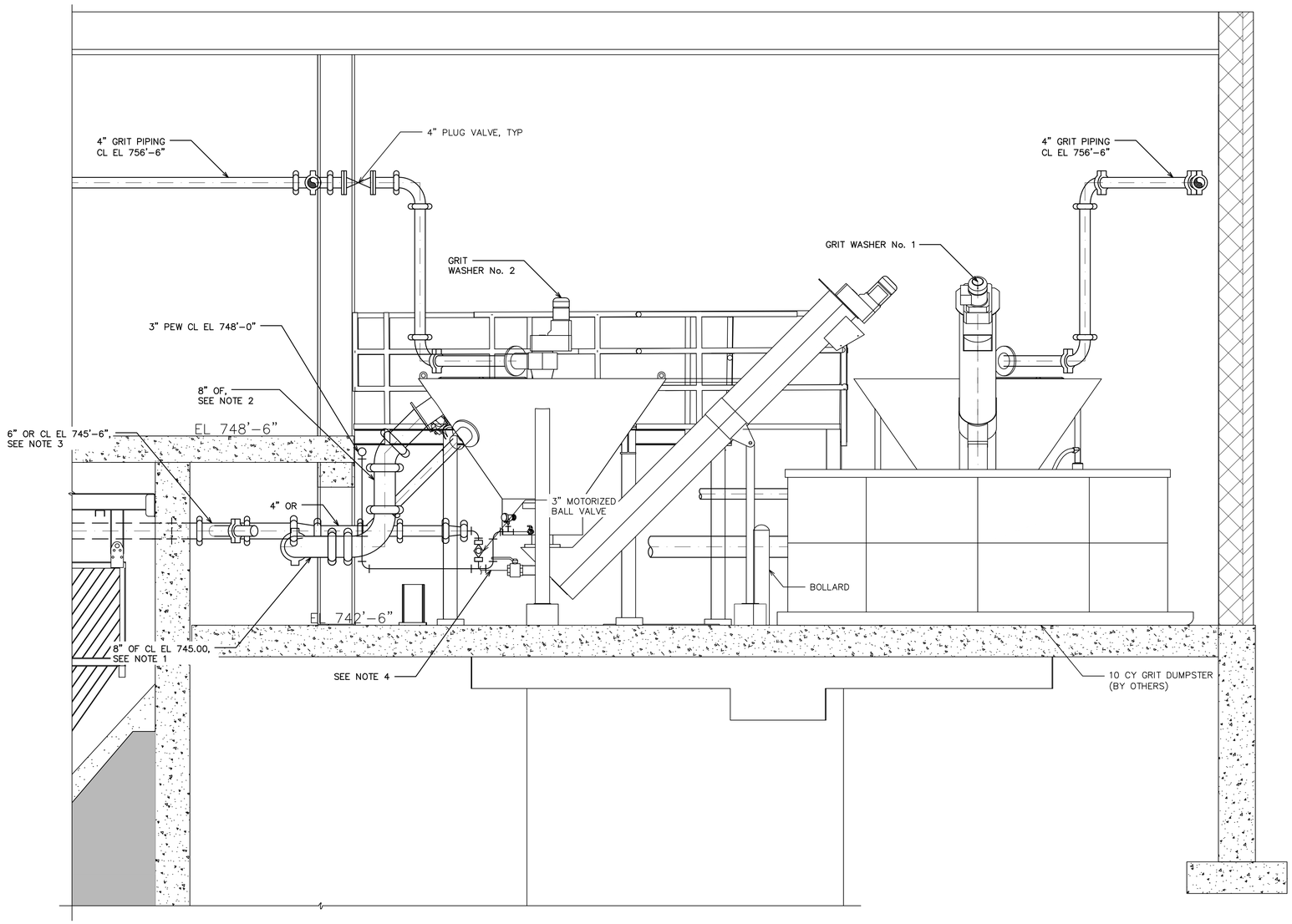

DUMPSTER ROOM SECTION — 8 / P–22

SCALE: 1/2"=1'–0"

1/2" = 1'– 0" 0 1 2 4

811 Know what's below. Call before you dig.

REV.	DESCRIPTION	DATE	DRAWN	CHECKED
	ISSUED FOR BIDS SET	12–13–2021		
	90% DESIGN SUBMITTAL	11–22–2021		
	70% DESIGN SUBMITTAL	10–29–2021		
	50% DESIGN SUBMITTAL	10–01–2021		

CITY OF ANN ARBOR
PUBLIC SERVICES
301 EAST HURON STREET
P.O. BOX 8647
ANN ARBOR, MI 48107-8647
(734) 794-6410
www.a2gov.org

PROJECT MANAGEMENT - PUBLIC SERVICES - CITY OF ANN ARBOR

HEADWORKS IMPROVEMENTS PROJECT

HEADWORKS BUILDING
DUMPSTER ROOM SECTION

SCALE 1/2" = 1'–0"

DRAWING No. 572

SHEET No. P–23

GENERAL NOTES:

1. CORE OPENING IN FLOOR.

2. ROUTE 3" PROCESS DRAIN TO SUMP AND TERMINATE ABOVE GRATING WITH 90–DEGREE FITTING.

3. SLOPE 8" OF PIPE TOWARD WALL PENETRATION AT CL EL 745.00.

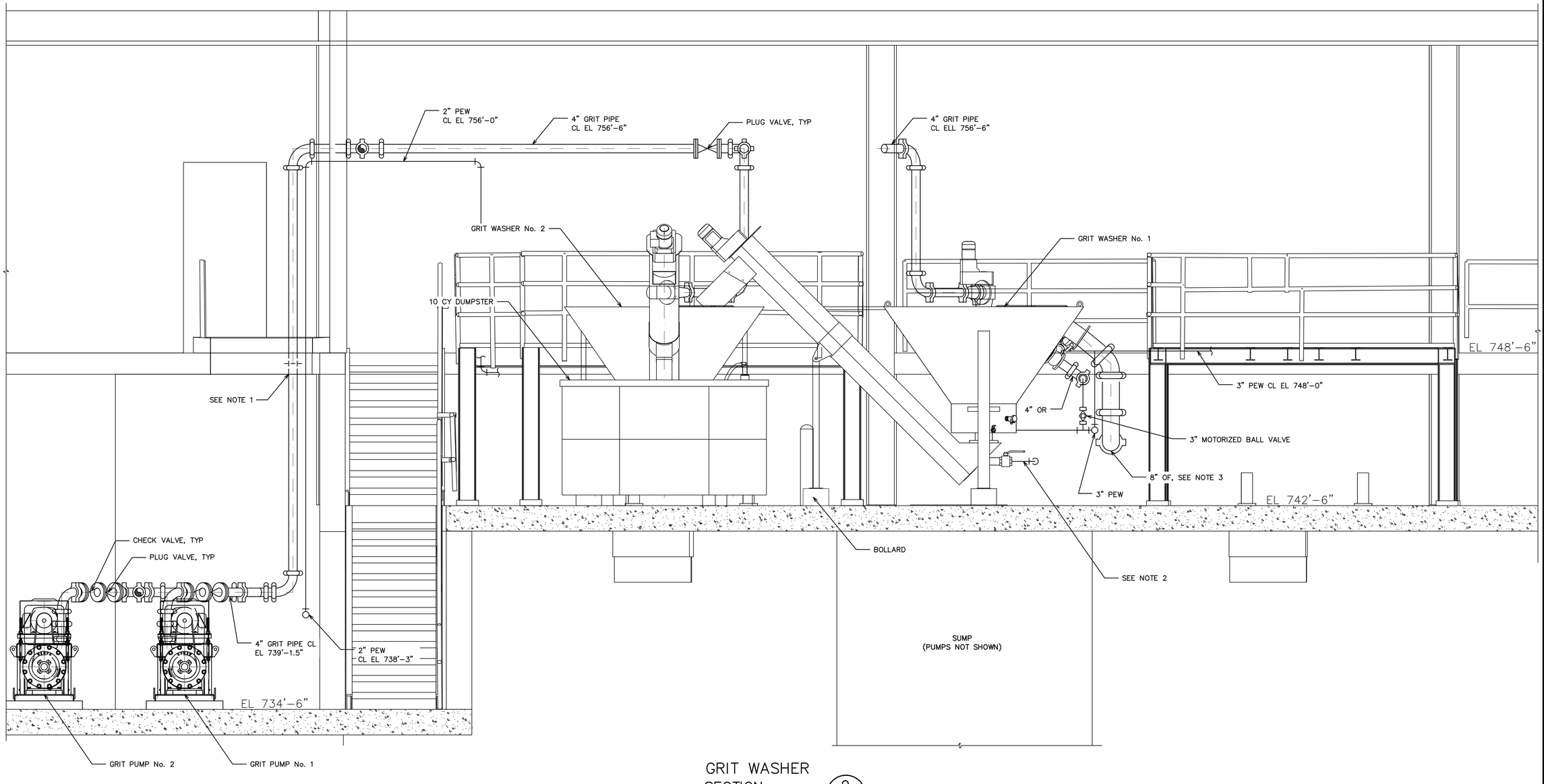

GRIT WASHER SECTION

SCALE: 1/2"=1'–0"

9
P–22

1/2" = 1'– 0"

0 1 2 4

Know what's below. Call before you dig. 811

REV.	DESCRIPTION	DATE	DRAWN	CHECKED
	ISSUED FOR BIDS SET	12–13–2021		
	90% DESIGN SUBMITTAL	11–22–2021		
	70% DESIGN SUBMITTAL	10–29–2021		
	50% DESIGN SUBMITTAL	10–01–2021		

CITY OF ANN ARBOR
PUBLIC SERVICES
301 E HURON STREET
P.O. BOX 8647
ANN ARBOR, MI 48107-8647
734.794.6410
www.a2gov.org

PROJECT MANAGEMENT - PUBLIC SERVICES - CITY OF ANN ARBOR

HEADWORKS IMPROVEMENTS PROJECT

GRIT WASHER SECTION

SCALE: AS SHOWN

DRAWING No. 574

SHEET No. P–24

SYMBOLS

THERMOSTAT/SENSOR

GATE VALVE

CHECK VALVE

AUTOMATIC CONTROL VALVE 2-WAY

AUTOMATIC CONTROL VALVE 3-WAY

SOLENOID OPERATED VALVE

GLOBE VALVE

BALL VALVE

BUTTERFLY VALVE

COMBINATION BALANCING COCK & FLOW SENSOR

TRIPLE DUTY VALVE (STRAIGHT, ANGLE PATTERN)

PIPING ELBOW, 90 TURNED DOWN

PIPING ELBOW, 90 TURNED UP

PIPING TEE, OUTLET TURNED DOWN

PIPING TEE, OUTLET TURNED UP

PRESSURE GAGE WITH SHUTOFF COCK (BALL VALVE)

THERMOMETER

SUPPLY AIR DUCT SECTION-UP

SUPPLY AIR DUCT SECTION-DOWN

RETURN AIR DUCT SECTION-UP

RETURN AIR DUCT SECTION-DOWN

EXHAUST AIR DUCT SECTION-UP

EXHAUST AIR DUCT SECTION-DOWN

MOTORIZED DAMPER

FIRE DAMPER WITH ACCESS DOOR

HOUR RATED WALL (2 HR. SHOWN)

FIRE/SMOKE DAMPER WITH ACCESS DOOR

HOUR RATED WALL (2 HR. SHOWN)

MANUAL VOLUME DAMPER

BACKDRAFT DAMPER

CHANGE OF ELEVATION: RISE (R) OR DROP (D)

LINETYPES

RL	REFRIGERANT LIQUID		
RS	REFRIGERANT SUCTION	FOS	FUEL OIL SUPPLY
HWS	HOT WATER SUPPLY LINE	FOR	FUEL OIL RETURN
HWR	HOT WATER RETURN LINE	FOG	FUEL OIL GAUGE
V	VENT	FOV	FUEL OIL VENT
CW	COLD WATER	NG	NATURAL GAS
HPS	HIGH PRESSURE STEAM	CWS	CHILLED WATER SUPPLY
LPS	LOW PRESSURE STEAM	CWR	CHILLED WATER RETURN
CR	CONDENSATE RETURN	CF	CHEMICAL FEED
MU	MAKE UP WATER	C	CONDENSER WATER SUPPLY
D	DRAIN	CR	CONDENSER WATER RETURN

ABBREVIATIONS

AC	AIR CONDITIONING, AIR CONDITIONING UNIT
ACCU	AIR COOLED CONDENSING UNIT
ACC	AIR COOLED CONDENSER
AD	ACCESS DOOR
AFF	ABOVE FINISHED FLOOR
AFUE	ANNUAL FUEL UTILIZATION EFFICIENCY
AHU	AIR HANDLING UNIT
APD	AIR PRESSURE DROP
ATC	AUTOMATIC TEMPERATURE CONTROL
ATU	AIR TERMINAL UNIT
B	BOILER
BD	GRAVITY BACKDRAFT DAMPER
BFP	BACKFLOW PREVENTER
BHP	BRAKE HORSEPOWER
BOD	BOTTOM OF DUCT
BOR	BOTTOM OF REGISTER
BOT	BOTTOM
CB	CIRCUIT BREAKER
CFM	CUBIC FEET OF STANDARD AIR PER MINUTE
CH	CABINET UNIT HEATER
CLG	CEILING
CONN	CONNECTION
CWS	CHILLED WATER SUPPLY
CWR	CHILLED WATER RETURN
DB	DRY BULB
DDC	DIRECT DIGITAL CONTROL
DX	DIRECT EXPANSION REFRIGERANT
DIA, ø	DIAMETER
DM	DAMPER MOTOR
DN	DOWN
EA	EXHAUST AIR
EC	ELECTRICAL CONTRACTOR
EAT	ENTERING AIR TEMPERATURE
EDH	ELECTRIC DUCT HEATER
EUH	ELECTRIC UNIT HEATER
EF	EXHAUST FAN
EL/ELEV	ELEVATION
ES	ENTHALPY SENSOR
ESP	EXTERNAL STATIC PRESSURE
ET	EXPANSION TANK
EWT	ENTERING WATER TEMPERATURE
FA	FOUL AIR
FC	FORWARD CURVED OR FAN COIL
FD	FIRE DAMPER WITH ACCESS DOOR
FLA	FULL LOAD AMPS
FOR	FUEL OIL RETURN
FOS	FUEL OIL SUPPLY
FOV	FUEL OIL VENT
FPM	FEET PER MINUTE
FTR	FINNED TUBE RADIATION
GC	GENERAL CONTRACTOR
GPM	GALLONS PER MINUTE
HG	HOT GAS
HP	HORSEPOWER OR HEAT PUMP
HV	HEATING AND VENTILATING UNIT
HWS	HOT WATER SUPPLY
HWR	HOT WATER RETURN
IDEC	INDIRECT EVAPORATIVE COOLING
IN. WG	INCHES OF WATER GAGE
KW	KILOWATT (1,000 WATTS)
L1	LOUVER (TYPE 1)
LAT	LEAVING AIR TEMPERATURE
LD1	LINEAR DIFFUSER (TYPE 1)
LF	LINEAR FEET
LR	LINEAR RETURN
LWT	LEAVING WATER TEMPERATURE
MAU	MAKEUP AIR UNIT
MBH	1,000 BTU PER HOUR
MC	MECHANICAL CONTRACTOR
MCA	MINIMUM CIRCUIT AMPACITY
MD	MOTORIZED DAMPER
MTD	MOUNTED
MVD	MANUAL VOLUME DAMPER
NC	NORMALLY CLOSED, NOISE CRITERIA
NK	NECK
NO	NORMALLY OPEN
NTS	NOT TO SCALE
OA	OUTSIDE AIR
OAI	OUTSIDE AIR INTAKE
ORP	OXYGEN REDUCTION POTENTIAL
P	PUMP
PC	PLUMBING CONTRACTOR
PD	PRESSURE DROP
PF	PROPELLER FAN
PH, ø	PHASE
PPU	POSITIVE PRESSURIZATION UNIT
PROP	PROPELLER
PRV	PRESSURE REGULATING VALVE
PTAC	PACKAGED TERMINAL AIR CONDITIONING UNIT
PS	PRESSURE SENSOR
PW	POTABLE WATER
RA	RETURN AIR
RH	RELATIVE HUMIDITY
RL	REFRIGERANT LIQUID
RLA	RATED LINE AMPS
RS	REFRIGERANT SUCTION
RPM	REVOLUTIONS PER MINUTE
SA	SUPPLY AIR
SD	SMOKE DETECTOR
SF	SUPPLY AIR FAN
SHR	SENSIBLE HEAT RATIO
SP	STATIC PRESSURE
SPEC	SPECIFICATION
SS	STAINLESS STEEL
SV	SOLENOID VALVE
TEMP	TEMPERATURE
TF	TRANSFER FAN
TH	TOTAL HEAT
TOD	TOP OF DUCT
TOU	TOP OF UNIT
TOR	TOP OF REGISTER
TSP	TOTAL STATIC PRESSURE
TS	TEMPERATURE SENSOR
TYP	TYPICAL
UH	UNIT HEATER
V	VOLTS
VAV	VARIABLE AIR VOLUME
VD	VOLUME DAMPER
VEL	VELOCITY
VH	HEATING CONTROL VALVE
VC	COOLING CONTROL VALVE
VFD	VARIABLE FREQUENCY DRIVE
VVT	VARIABLE VOLUME AND VARIABLE TEMPERATURE
WPD	WATER PRESSURE DROP
W/	WITH
WB	WET BULB
WC	WATER COLUMN

(*)(*)(*)-AHU-1
- QUANTITY DESIGNATION
- EQUIPMENT DESIGNATION
- BUILDING DESIGNATION WHEN APPLICABLE

SR1 — SUPPLY AIR REGISTER
- SUPPLY AIR REGISTER (TYPE 1)
- SUPPLY AIR REGISTER (TYPE 2), ETC.

RR1 — RETURN AIR REGISTER (TYPE 1)

ER1 — EXHAUST AIR REGISTER (TYPE 1)

20X10 SR1 — 20X10 NECK SIZE, SUPPLY REGISTER (TYPE 1)
1000 CFM — 1000 CUBIC FEET PER MINUTE AIRFLOW RATE

LOUVERED FACE SIZE

24X24 CDA — CEILING DIFFUSER (TYPE A)
8-300
- CUBIC FEET PER MINUTE AIRFLOW RATE SETTING (MAX)
- NECK DIAMETER

SHADED SECTION OF CEILING DIFFUSER INDICATES INACTIVE PANELS

2 — DOOR LOUVER NUMBER INDICATES SIZE SQ FT

GENERAL NOTES

1. THE SYMBOLS AND ABBREVIATIONS LIST ON THIS SHEET IS A COMPREHENSIVE STANDARD GUIDE INTENDED FOR GENERAL USE ON ALL PROJECTS. THEREFORE NOT ALL THE SYMBOLS AND ABBREVIATIONS CONTAINED IN THIS LIST ARE NECESSARILY USED ON THIS PARTICULAR PROJECT AND SHOULD BE USED FOR CLARIFICATION ONLY.
2. ALL DUCT DIMENSIONS ARE CLEAR DIMENSIONS TO INSIDE OF DUCT. DIMENSIONS TO DUCTS FROM FLOOR OR WALL SHALL BE TO THE OUTSIDE OF DUCT/INSULATION. WHERE INTERNAL INSULATION IS REQUIRED THE DUCT SIZE SHALL BE INCREASED TO GIVE CLEAR INSIDE DIMENSIONS AS NOTED ON THE DRAWINGS.
3. EQUIPMENT SIZES AND LOCATIONS ARE APPROXIMATE. ACTUAL DIMENSIONS TO BE DETERMINED BY EQUIPMENT FURNISHED. COORDINATE HVAC WORK WITH THE WORK OF ALL OTHER TRADES.
4. FINAL OPENING DIMENSIONS, CONCRETE PAD SIZES, AND LOCATIONS MUST BE COORDINATED DURING CONSTRUCTION WITH APPROVED EQUIPMENT.
5. FINAL SIZES OF FLOOR OPENINGS, DUCT PLENUMS, TRANSITIONS AND PIPING CONNECTIONS TO ALL EQUIPMENT SHALL BE DETERMINED BY EQUIPMENT FURNISHED.
6. THE DRAWINGS ARE SCHEMATIC IN NATURE AND SHOW INTENDED GENERAL LOCATION OF HVAC EQUIPMENT AND SYSTEMS. NOT ALL OFFSETS AND REQUIRED FITTINGS FOR ACTUAL FIELD INSTALLATION ARE INTENDED TO BE SHOWN FOR INSTALLATION OF SYSTEMS IN THE SPACE AVAILABLE IN CONSIDERATION OF WORK OF OTHER TRADES AND FIELD CONDITIONS. CONTRACTOR SHALL PROVIDE ADDITIONAL OFFSETS IN DUCTWORK AND PIPING AS REQUIRED TO AVOID SUCH INTERFERENCES OR FIELD CONDITIONS AT NO ADDITIONAL COST TO THE ORIGINAL CONTRACT AMOUNT.
7. FIRST FIGURE OF DUCT SIZE INDICATES DIMENSION OF FACE SHOWN OR INDICATED OR WIDTH OF DUCT IN PLAN VIEW.
8. COORDINATE THE REQUIREMENTS FOR HVAC OPENINGS AND SLEEVES IN BUILDING ELEMENTS WITH THE GC.
9. CONTRACTOR SHALL REFER TO SPECIFICATION SECTION 09900 FOR PAINTING REQUIREMENTS UNLESS OTHERWISE NOTED.
10. REFER TO ELECTRICAL DRAWINGS OR SPECIFICATIONS FOR INTERLOCKING WIRING REQUIREMENTS.
11. CONTRACTOR SHALL COORDINATE DUCTWORK INSTALLATION WITH OTHER TRADES SO THAT THE DUCTWORK IS INSTALLED BEFORE THE PIPING, LIGHTING AND ELECTRICAL CONDUIT.
12. PROVIDE ADEQUATE SUPPORT, PER THE MANUFACTURER'S RECOMMENDATIONS, FOR ALL HVAC EQUIPMENT.
13. CONTRACTOR SHALL BE RESPONSIBLE FOR CHECKING ELECTRICAL RATINGS FROM CERTIFIED DRAWINGS OF EQUIPMENT AND SHALL MAKE ANY BRANCH CIRCUIT DISTRIBUTION MODIFICATION REQUIREMENTS WITHOUT ANY ADDITIONAL COST TO OWNER. THE CONTRACTOR SHALL SUBMIT A SCHEDULE OF SUCH CHANGES FOR APPROVAL BY ENGINEER.
14. WHEREVER THE REQUIREMENTS AND REGULATIONS OF STATE, FEDERAL AND LOCAL AUTHORITIES HAVING JURISDICTION DIFFER FROM THE DRAWINGS OR SPECIFICATIONS, THEY SHALL TAKE PRECEDENCE AND SHALL BE MADE PART OF THE CONTRACT (EXCEPT WHERE THE DRAWINGS OR SPECIFICATIONS ARE MORE STRINGENT).
15. THE CONTRACTOR SHALL PROVIDE AND INSTALL FIRE AND SMOKE RATED DAMPERS IN HVAC DUCTS WHICH PENETRATE FIRE RATED BUILDING ASSEMBLIES AS SHOWN ON ARCHITECTURAL DRAWINGS.
16. DUCTWORK AND PLENUM TO LOUVERS SHALL BE CONNECTED TO FRAMED OPENINGS AND, SEALED AIRTIGHT AND WEATHER RESISTANT.
17. THERMOSTATS, SENSORS, AND/OR CONTROL PANEL LOCATIONS SHOWN ARE APPROXIMATE AND SHALL BE COORDINATED TO SUIT FIELD CONDITIONS.
18. INSTALL WALL MTD SENSORS, CONTROLS AND THERMOSTATS 5'-0" AFF UNLESS OTHERWISE NOTED. ALIGN WITH OTHER NEARBY ITEMS SUCH AS LIGHT SWITCHES. DO NOT INSTALL CLOSER THAN 6-INCHES FROM EDGE OF DOOR FRAME OR CORNER OF WALL AS SHOWN ON ARCH PLANS. WHERE CONFLICTS MAY OCCUR WITH ITEMS SUCH AS LIGHT SWITCHES, MOUNT THE SENSOR OR CONTROL DEVICE 4'-6" AFF CENTERED ABOVE THE LIGHT SWITCH.
19. PROVIDE ADEQUATE MEANS OF ACCESS CLEARANCE FOR ALL HVAC/MECHANICAL EQUIPMENT AND SYSTEMS THAT REQUIRE ACCESS FOR PROPER OPERATION, MAINTENANCE AND REPAIR PER RECOMMENDED MANUFACTURER CLEARANCES. PROVIDE ACCESS DOORS WHERE NECESSARY IN FINISHED WALLS OR DRYWALL CEILINGS FOR ACCESS TO VALVES, DAMPERS, OR CONTROL DEVICES.
20. COORDINATE THE REQUIREMENTS OF HVAC HANGERS AND SUPPORTS W/ OTHER PRIME CONTRACTORS PROVIDING STRUCTURAL AND/OR ARCHITECTURAL BUILDING ELEMENTS WHICH HVAC SUPPORTS SHALL INTERFACE.
21. HVAC CONTRACTOR SHALL PROVIDE ALL FIRESTOPPING AND PIPE SLEEVES FOR ALL PIPE AND DUCT PENETRATIONS THRU FIRE RATED BUILDING ASSEMBLIES.
22. CONTRACTOR SHALL OBTAIN AND PAY ALL FEES RELATED TO PERMITTING, AND INSPECTIONS.
23. FOR ADDITIONAL REQUIREMENTS REFER TO SPECIFICATIONS.
24. APPLICABLE CODES AND STANDARDS:
    2015 MICHIGAN BUILDING CODE
    2015 MICHIGAN MECHANICAL CODE
    2015 INTERNATIONAL ENERGY CONSERVATION CODE
    2020 NFPA 820

Know what's below. Call before you dig. 811

REV.	DESCRIPTION	DATE	DRAWN	CHECKED
	ISSUED FOR BIDS SET	12-13-2021		
	90% DESIGN SUBMITTAL	11-22-2021		
	70% DESIGN SUBMITTAL	10-29-2021		
	50% DESIGN SUBMITTAL	10-01-2021		

CITY OF ANN ARBOR
PUBLIC SERVICES
301 EAST HURON STREET
P.O. BOX 8647
ANN ARBOR, MI 48107-8647
734.794.6430
www.a2gov.org

PROJECT MANAGEMENT - PUBLIC SERVICES - CITY OF ANN ARBOR

HEADWORKS IMPROVEMENTS PROJECT

HVAC LEGEND, NOTES AND ABBREVIATIONS

SCALE N.T.S.

DRAWING No. 601

SHEET No. M-01

LOUVER SCHEDULE

MARK NO.	LOCATION	AREA SERVED/ UNIT SERVED	MANUFACTURER & MODEL No.	TYPE	WIDTH (IN)	HEIGHT (IN)	FREE AREA (SF)	CFM	TYPE	VELOCITY (FPM)	S.P. (IN)	NOTES
L-1	ODOR CONTROL BUILDING	ODOR CONTROL BUILDING	RUSKIN ELF6375	FIXED	36	40	5.7	2,305	INTAKE	404.4	0.03	1, 2
L-2	ODOR CONTROL BUILDING	ODOR CONTROL BUILDING	RUSKIN ELF6375	FIXED	32	32	4.0	2,750	INTAKE	687.5	0.05	1, 2

NOTES:
1. PROVIDE KYNAR COATING, REFER TO SPEC 15598.
2. PROVIDE GRAVITY BACKDRAFT DAMPER.

DESIGN TEMPERATURE CONDITIONS

OUTSIDE	PROCESS AREAS
WINTER: -1° F DB	WINTER: 55° F
SUMMER: 90.0° F DB / 73.3 F WB	SUMMER: 100° F DB

OUTSIDE DESIGN TEMPERATURES BASED UPON ASHRAE 2017 FUNDAMENTALS CHAPTER 14 CLIMATIC DESIGN DATA FOR THE 99.6 PERCENTILE HEATING DRYBULB INCIDENCE AND 0.4 PERCENTILE COOLING DRYBULB AND WETBULB INCIDENCES: ANN ARBOR MUNICIPAL AIRPORT, ANN ARBOR, MI. (WMO: 725374)

NATURAL GAS UNIT HEATER SCHEDULE

MARK	LOCATION	AREA SERVED	MANUFACTURER		TYPE	AIRFLOW (CFM)	INPUT CAPACITY (MBH)	OUTPUT CAPACITY (MBH)	TEMP. RISE (°F)	THERMAL EFF. (%)	DIMENSIONS			ELECTRICAL				WEIGHT (LBS)	NOTES
			MAKE	MODEL							WIDTH	HEIGHT	LENGTH	VOLTS	PHASE	HZ	AMPS		
GUH-1	ODOR CONTROL BUILDING	ODOR CONTROL ROOM	REZNOR	UDAS 125	SEPARTED COMBUSTION	1,535	125	99.6	60.0	60.0	6.5	16	20	480	3	60	30.1	58	1, 2, 3, 4, 5, 6
GUH-2	ODOR CONTROL BUILDING	ODOR CONTROL ROOM	REZNOR	UDAS 125	SEPARTED COMBUSTION	1,535	125	99.6	60.0	60.0	6.5	16	20	480	3	60	30.1	58	1, 2, 3, 4, 5, 6

NOTES:
1. SPECIFICATION 23 55 33.
2. WALL MOUNTED THERMOSTAT
3. DOOR DISCONNECT SWITCH
4. AUTOMATIC RESET TEMP LIMIT CONTROL
5. MAGNETIC CONTACTORS
6. 24 VOLT CONTROL TRANSFORMER

MAKE-UP AIR UNIT SCHEDULE

MARK	AREA SERVED	MANUFACTURER		DESIGN AIRFLOW (CFM)	ESP (IN. W.C.)	INPUT HEATING CAPACITY (MBH)	OUTPUT HEATING CAPACITY (BTUH)	EAT (°F)	LAT (°F)	FUEL SOURCE	BURNER TYPE	DELIVERY PRESSURE (" W.C.)	MOTOR QTY	B.H.P. AT DESIGN POINT	MOTOR HP	ELECTRICAL					WEIGHT POUNDS	NOTES
		MAKE	MODEL													VOLTS	PHASE	HZ	MCA	MOCP		
MAU-1	SCREEN BUILDING	INNOVENT	CAHU-10800-DF-460	10,800	1.0	1,300	1,040	-10.0	79.2	NAT. GAS	INDIRECT	6-14	2	2.9	5	480	3	60	9.6	15	5,000	1 THRU 13

NOTES:
1. REFER TO CONTROL DIAGRAMS AND SPECIFICATION 23 09 01 FOR SEQUENCE OF OPERATION.
2. REFER TO SPECIFICATION 23 75 00 FOR CONSTRUCTION AND ACCESSORY DETAILS
3. STARTER PROVIDED BY DIV. 26.
4. DISCONNECT SWITCH PROVIDED BY DIV. 26.
5. MOTOR OPERATED INLET DAMPER
6. MERV 8 FILTERS
7. DOUBLE WALL CONSTRUCTION
8. DISCHARGE AIR TEMPERATURE SENSOR
9. DIRTY FILTER SENSOR
10. 12" INSULATED ROOF CURB
11. NEOPRENE ISOLATORS
12. POLYMER COATING.
13. TYPE B SPARK RESISTANT MOTOR

FAN SCHEDULE

MARK	LOCATION	AREA SERVED	MANUFACTURER		TYPE	DESIGN AIRFLOW (CFM)	ESP (IN. W.C.)	WHEEL TYPE	SPEED (RPM)	MOTOR						ELECTRICAL				NOTES
			MAKE	MODEL						MAX. BHP	HP	RPM	DRIVE	VFD		VOLTS	PHASE	HZ	MCA	
EF-1	ODOR CONTROL ROOM	ODOR CONTROL ROOM	LOREN COOK	DB-13	CENTRIFUGAL	2,570	0.5	BACKWARD	708	0.66	1	1,750	BELT	NO		480	3	60	6	1
SF-1	ODOR CONTROL ROOM	ODOR CONTROL ROOM	LOREN COOK	DB-13	CENTRIFUGAL	2,305	0.75	BACKWARD	803	0.71	1	1,750	BELT	NO		480	3	60	6	1
EF-2	ELECTRICAL ROOM	ELECTRICAL ROOM	LOREN COOK	GN-542	CENTRIFUGAL	300	0.38	BACKWARD	1,600	.16	0.25	1,750	DIRECT	NO		120	1	60	1	1
SF-2	ELECTRICAL ROOM	ELECTRICAL ROOM	LOREN COOK	GN-742	CENTRIFUGAL	275	0.38	BACKWARD	1,500	0.12	0.25	1,750	DIRECT	NO		120	1	60	1	1

NOTES:
1. SPECIFICATION 23 34 00.

AIR DEVICE SCHEDULE

MARK No.	LOCATION	AREA SERVED	MANUFACTURER & MODEL No.	MATERIAL	FACE SIZE (INCHES)	MAX. S.P. IN WG	MOUNTING	NOTES
ER1	VARIOUS	VARIOUS	TITUS 350RL-SS	STAINLESS STEEL	SEE PLANS	0.1	SEE PLANS	2
ER2	VARIOUS	VARIOUS	-	STAINLESS STEEL	SEE PLANS	0.1	BOD	2
SR1	VARIOUS	VARIOUS	TITUS 300RL-SS	STAINLESS STEEL	SEE PLANS	0.1	SEE PLANS	1
SR2	VARIOUS	VARIOUS	TITUS TMR	ALUMINUM	SEE PLANS	0.1	SEE PLANS	1

NOTES:
1. WITH DOUBLE DEFLECTION, 3/4" BLADE SPACING AND OPPOSED BLADE DAMPER.
2. DOUBLE DEFLECTION, 45 DEGREE DEFLECTION, 3/4" BLADE SPACING AND OPPOSED BLADE DAMPER.

811 Know what's below. Call before you dig.

REV.	DESCRIPTION	DATE	DRAWN	CHECKED
	ISSUED FOR BIDS SET	12-13-2021		
	90% DESIGN SUBMITTAL	11-22-2021		
	70% DESIGN SUBMITTAL	10-29-2021		
	50% DESIGN SUBMITTAL	10-01-2021		

CITY OF ANN ARBOR
PUBLIC SERVICES
301 E. HURON STREET
P.O. BOX 8647
ANN ARBOR, MI 48107-8647
734.794.6410
www.a2gov.org

PROJECT MANAGEMENT - PUBLIC SERVICES - CITY OF ANN ARBOR

HEADWORKS IMPROVEMENTS PROJECT

HVAC SCHEDULES

SCALE N.T.S.

DRAWING No. 603

SHEET No. M-02

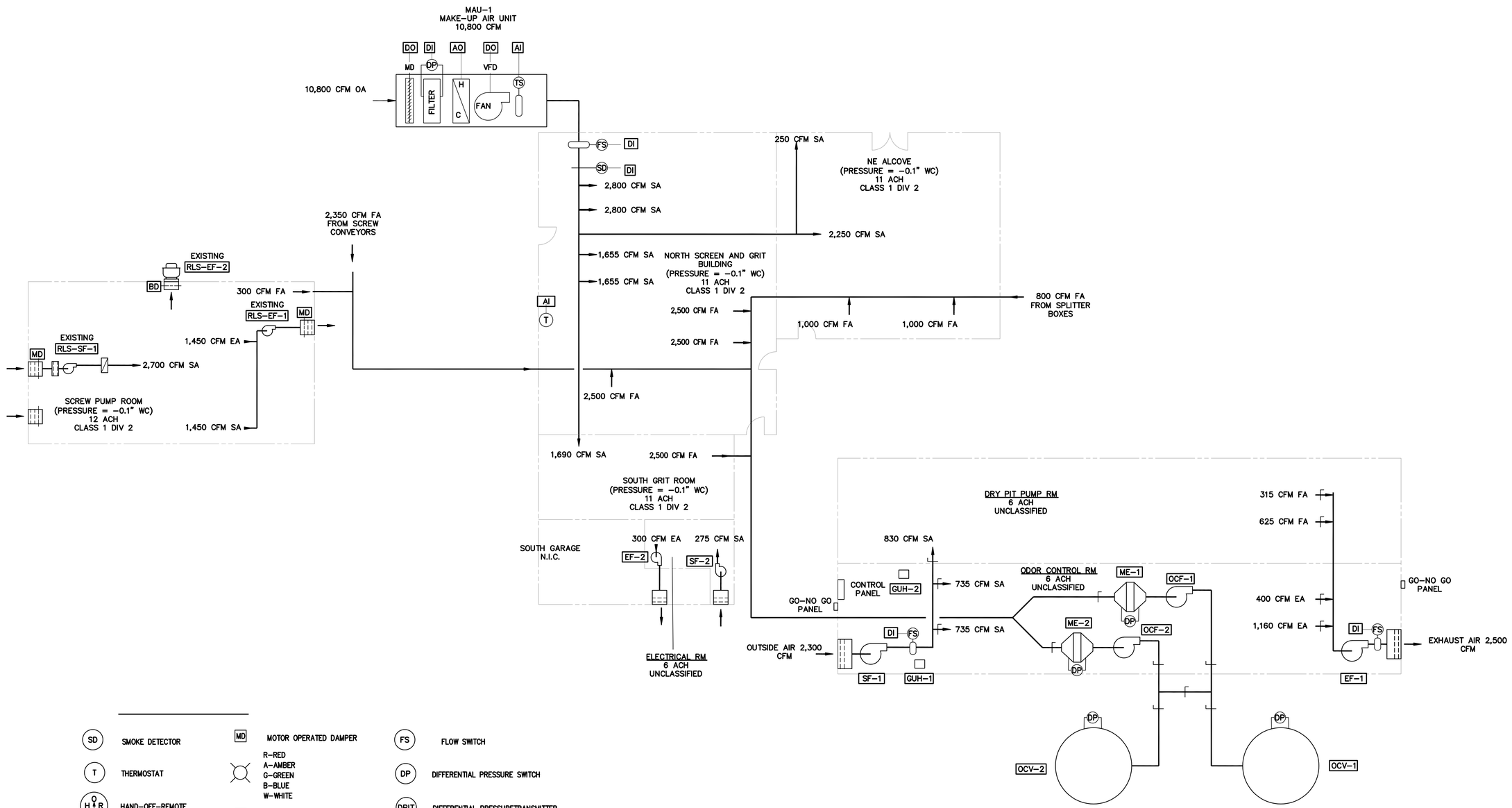

SD — SMOKE DETECTOR

T — THERMOSTAT

H O R — HAND-OFF-REMOTE

H / C — ELECTRIC HEAT COIL

MD — MOTOR OPERATED DAMPER

R-RED
A-AMBER
G-GREEN
B-BLUE
W-WHITE

BD — BACKDRAFT DAMPER

ALARM HORN

ALARM LIGHT

FS — FLOW SWITCH

DP — DIFFERENTIAL PRESSURE SWITCH

DPIT — DIFFERENTIAL PRESSURETRANSMITTER

PSL — PRESSURE SWITCH – LOW

PSH — PRESSURE SWITCH – HIGH

NOTES:

1. ALL ROOM PRESSURES ARE RELATIVE TO AMBIENT PRESSURE.
2. FOR SEQUENCE OF OPERATION SEE SPECIFICATION 15584.

811 Know what's below. Call before you dig.

REV.	DESCRIPTION	DATE	DRAWN	CHECKED
	ISSUED FOR BIDS SET	12-13-2021		
	90% DESIGN SUBMITTAL	11-22-2021		
	70% DESIGN SUBMITTAL	10-29-2021		
	50% DESIGN SUBMITTAL	10-01-2021		

CITY OF ANN ARBOR
PUBLIC SERVICES
301 EAST HURON STREET
P.O. BOX 8647
ANN ARBOR, MI 48107-8647
734.794-6410
www.a2gov.org

PROJECT MANAGEMENT - PUBLIC SERVICES - CITY OF ANN ARBOR

HEADWORKS IMPROVEMENTS PROJECT

HVAC AIRFLOW DIAGRAM

SCALE N.T.S.

DRAWING No. 605

SHEET No. M-03

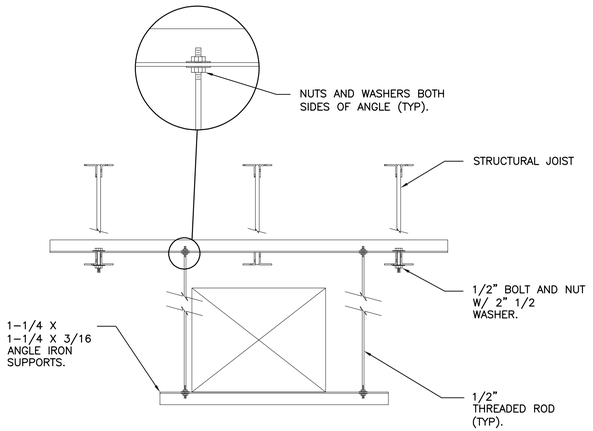

DUCT HANGER
NO SCALE

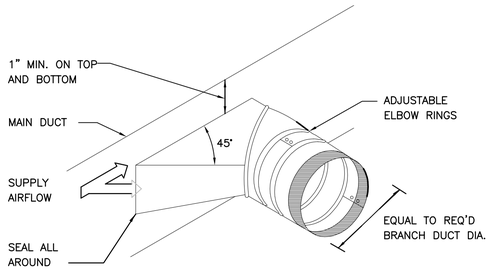

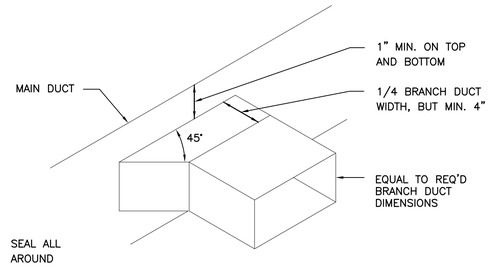

TYPICAL BRANCH TAKE-OFF
NO SCALE

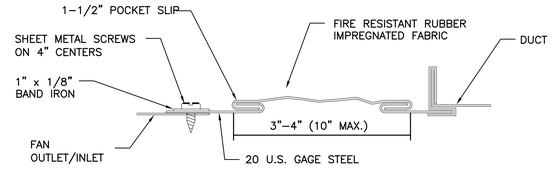

FLEXIBLE CONNECTOR
NO SCALE

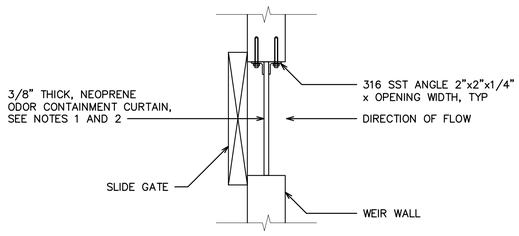

TYPE 1

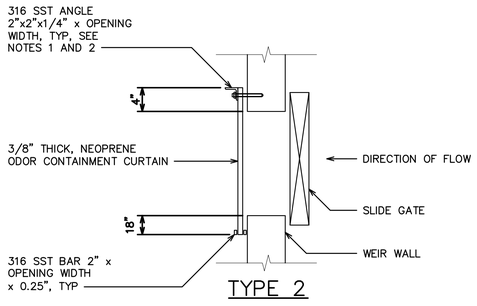

TYPE 2

NOTES:

1. ALL BOLTS AND FASTENERS SHALL BE 316 SST MATERIAL.
2. ANCHOR BOLTS SHALL BE 0.5 DIA. (MIN) WITH 2" EMBEDMENT (MIN) AND A MAX SPACING OF 12" ON CENTER.

IFS ODOR CONTAINMENT CURTAIN DETAILS
NO SCALE

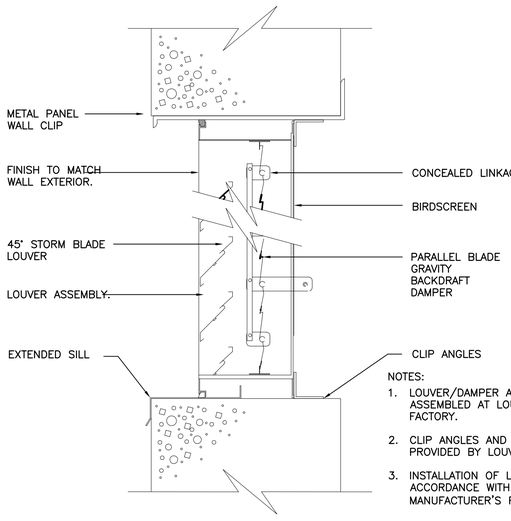

NOTES:

1. LOUVER/DAMPER ASSEMBLIES TO BE ASSEMBLED AT LOUVER MANUFACTURER FACTORY.
2. CLIP ANGLES AND EXTENDED SILL TO BE PROVIDED BY LOUVER MANUFACTURER.
3. INSTALLATION OF LOUVER TO BE IN ACCORDANCE WITH LOUVER MANUFACTURER'S RECOMMENDATIONS.

LOUVER
NO SCALE

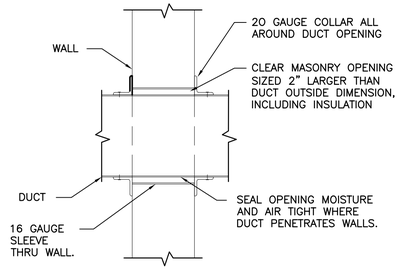

DUCT WALL PENETRATION
NO SCALE

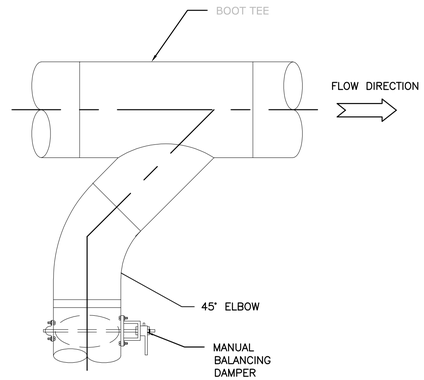

FOUL AIR DUCT BRANCH
NO SCALE

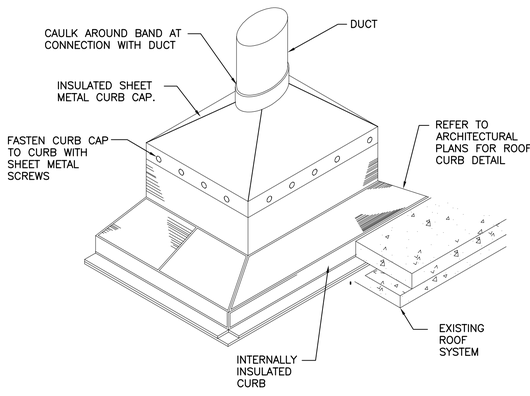

CURB CAP
NO SCALE

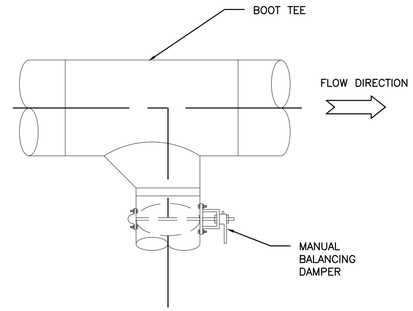

ROUND DUCT BRANCH
NO SCALE

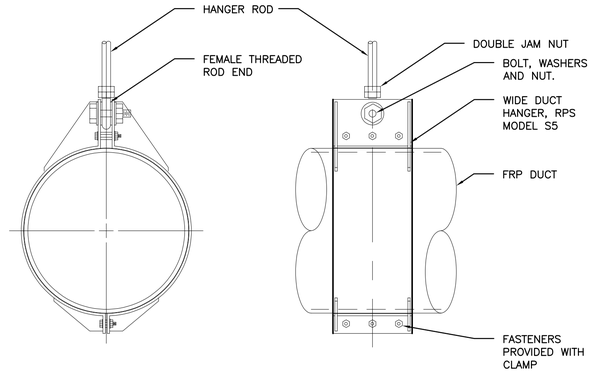

FRP DUCT HANGER
NO SCALE

Know what's below. Call before you dig.

REV.	DESCRIPTION	DATE	DRAWN	CHECKED
	50% DESIGN SUBMITTAL	10-01-2021		
	70% DESIGN SUBMITTAL	10-29-2021		
	90% DESIGN SUBMITTAL	11-22-2021		
	ISSUED FOR BIDS SET	12-13-2021		

CITY OF ANN ARBOR
PUBLIC SERVICES
301 E. HURON STREET
P.O. BOX 8647
ANN ARBOR, MI 48107-8647
734-794-6410
www.a2gov.org

PROJECT MANAGEMENT - PUBLIC SERVICES - CITY OF ANN ARBOR

HEADWORKS IMPROVEMENTS PROJECT
HVAC MISCELLANEOUS DETAILS -1

SCALE N.T.S.
DRAWING No. 607
SHEET No. M-04

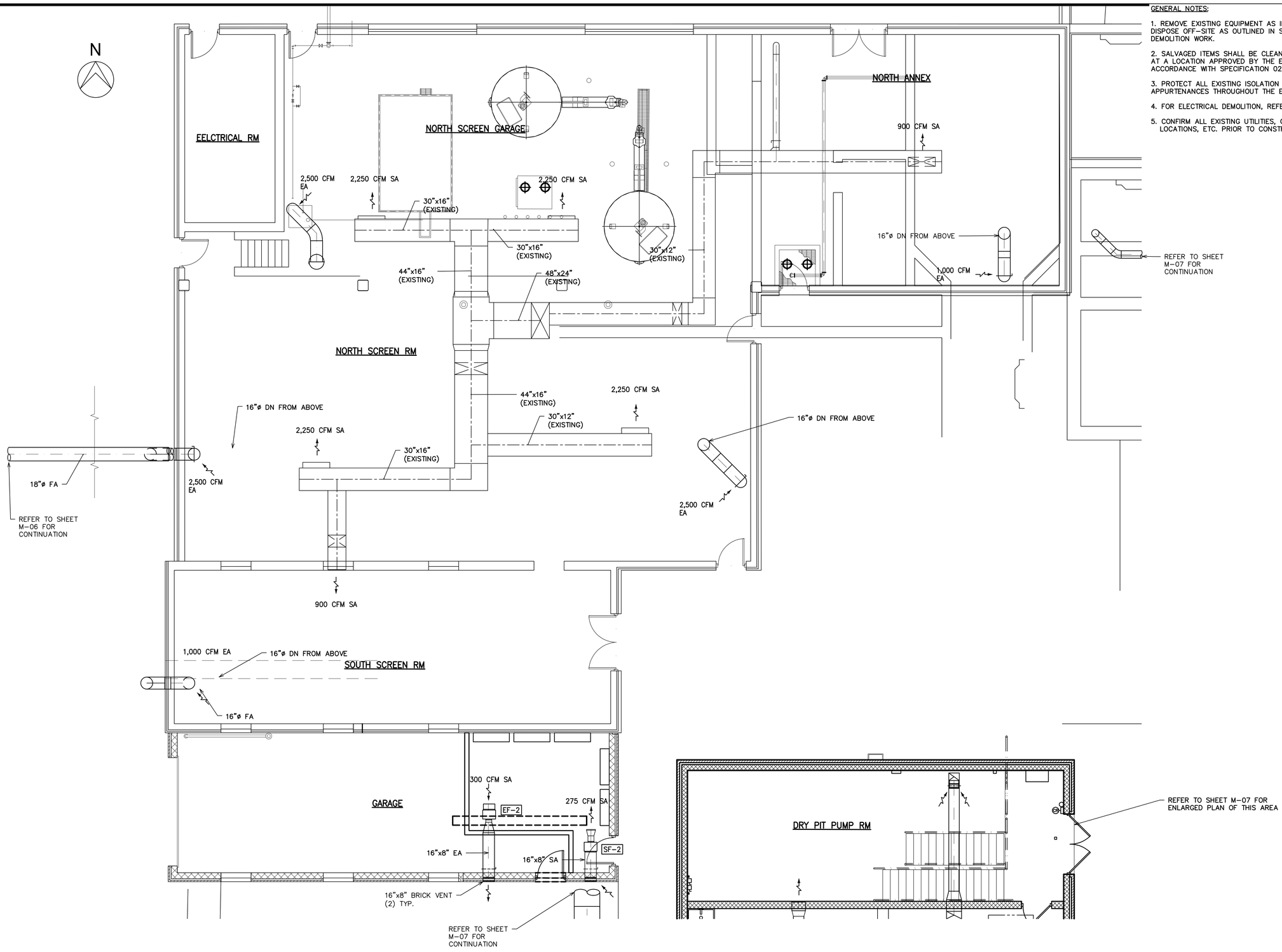

ODOR CONTROL OVERALL PLAN @ EL 732.0

SCALE: 3/16" = 1'-0"

GENERAL NOTES:

1. REMOVE EXISTING EQUIPMENT AS INDICATED AND LEGALLY DISPOSE OFF-SITE AS OUTLINED IN SPECIFICATION 02050 – DEMOLITION WORK.

2. SALVAGED ITEMS SHALL BE CLEANED, STORED, AND PROTECTED AT A LOCATION APPROVED BY THE ENGINEER. SALVAGE ITEMS IN ACCORDANCE WITH SPECIFICATION 02050 – DEMOLITION WORK.

3. PROTECT ALL EXISTING ISOLATION GATES AND ASSOCIATED APPURTENANCES THROUGHOUT THE ENTIRETY OF CONSTRUCTION.

4. FOR ELECTRICAL DEMOLITION, REFER TO SHEET DE-XX.

5. CONFIRM ALL EXISTING UTILITIES, CONDUIT PIPING, EQUIPMENT LOCATIONS, ETC. PRIOR TO CONSTRUCTION.

811 Know what's below. Call before you dig.

REV.	DESCRIPTION	DATE	DRAWN	CHECKED
	ISSUED FOR BIDS SET	12-13-2021		
	90% DESIGN SUBMITTAL	11-22-2021		
	70% DESIGN SUBMITTAL	10-29-2021		
	50% DESIGN SUBMITTAL	10-01-2021		

CITY OF ANN ARBOR
PUBLIC SERVICES
301 EAST HURON STREET
P.O. BOX 8647
ANN ARBOR, MI 48107-8647
734-794-6410
www.a2gov.org

PROJECT MANAGEMENT - PUBLIC SERVICES - CITY OF ANN ARBOR

HEADWORKS IMPROVEMENTS PROJECT

PLAN OF ODOR CONTROL OVERALL

SCALE 3/16" = 1'-0"

DRAWING No. 609

SHEET No. M-05

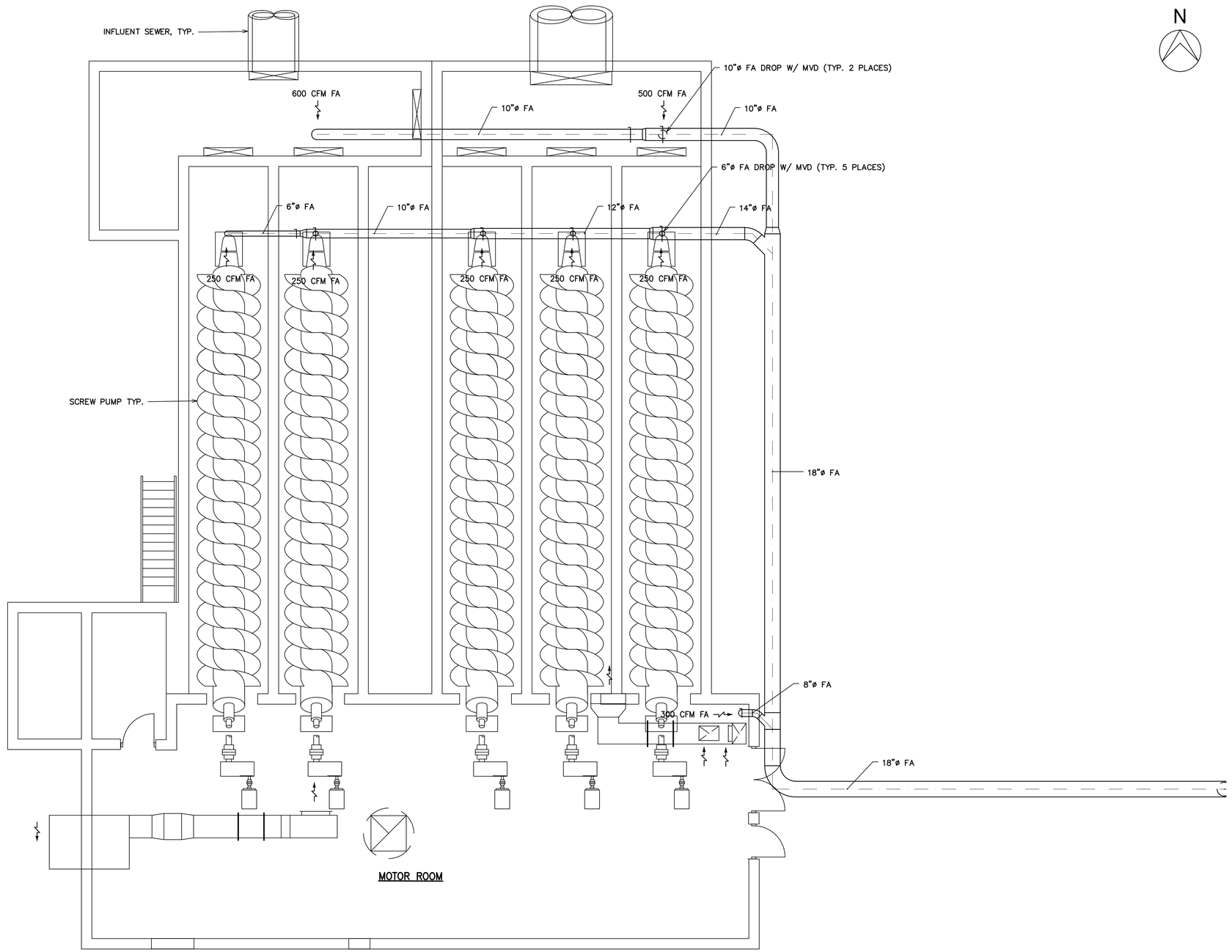

N

ODOR CONTROL LIFT STATION PLAN @ EL 732.0

SCALE: 3/16" = 1'-0"

811 Know what's below. Call before you dig.

REV.	DESCRIPTION	DATE	DRAWN	CHECKED
	ISSUED FOR BIDS SET	12-13-2021		
	90% DESIGN SUBMITTAL	11-22-2021		
	70% DESIGN SUBMITTAL	10-29-2021		
	50% DESIGN SUBMITTAL	10-01-2021		

CITY OF ANN ARBOR
PUBLIC SERVICES
301 EAST HURON STREET
P.O. BOX 8647
ANN ARBOR, MI 48107-8647
734-794-6410
www.a2gov.org

PROJECT MANAGEMENT - PUBLIC SERVICES - CITY OF ANN ARBOR

HEADWORKS IMPROVEMENTS PROJECT

LIFT STATION PLAN AT EL 732.0

SCALE 1/8" = 1'-0"

DRAWING No. 611

SHEET No. M-06

NOTES:

1. SLOPE DUCTWORK CONTINUOUSLY AT $\frac{1}{16}$" PER FOOT TOWARDS GFMES.
2. COORDINATE DUCT ELEVATIONS WITH EQUIPMENT CONNECTIONS.
3. MANUFACTURER – SUPPLIED EQUIPMENT MAY VARY DEPENDING ON EQUIPMENT PROVIDED. EQUIPMENT SHALL BE LOCATED IN GENERAL AREA AS SHOWN. INSTRUMENTS SHALL BE POWERED FROM THE VENDOR SUPPLIED CONTROL PANEL.
4. PROVIDE A MINIMUM OF 4'–0" CLEAR IN FRONT OF CONTROL PANELS.
5. REFER TO STRUCTURAL DRAWINGS FOR DUCT SUPPORT DETAILS.

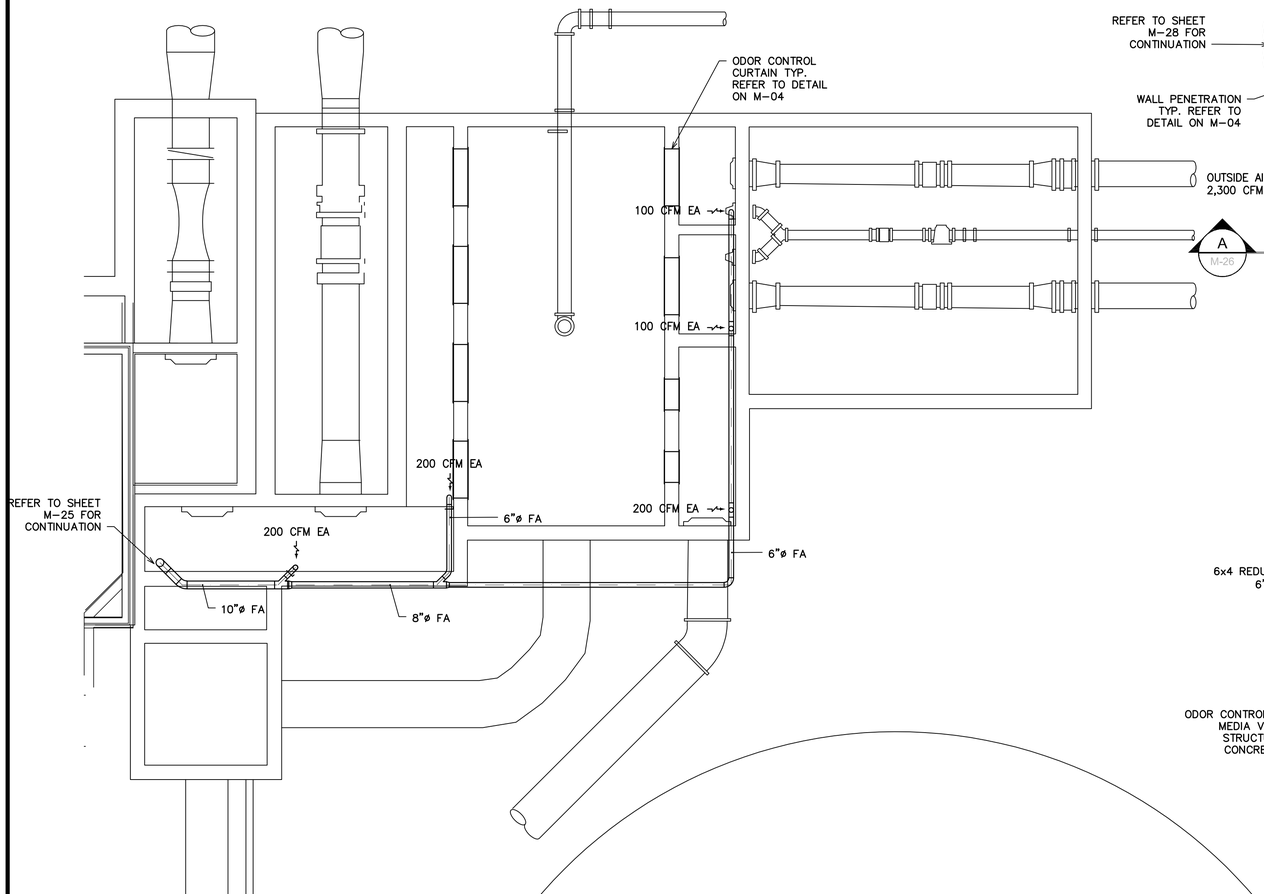

ODOR CONTROL CHANNEL PLAN @ EL 732.0

SCALE: 1/8" = 1'–0"

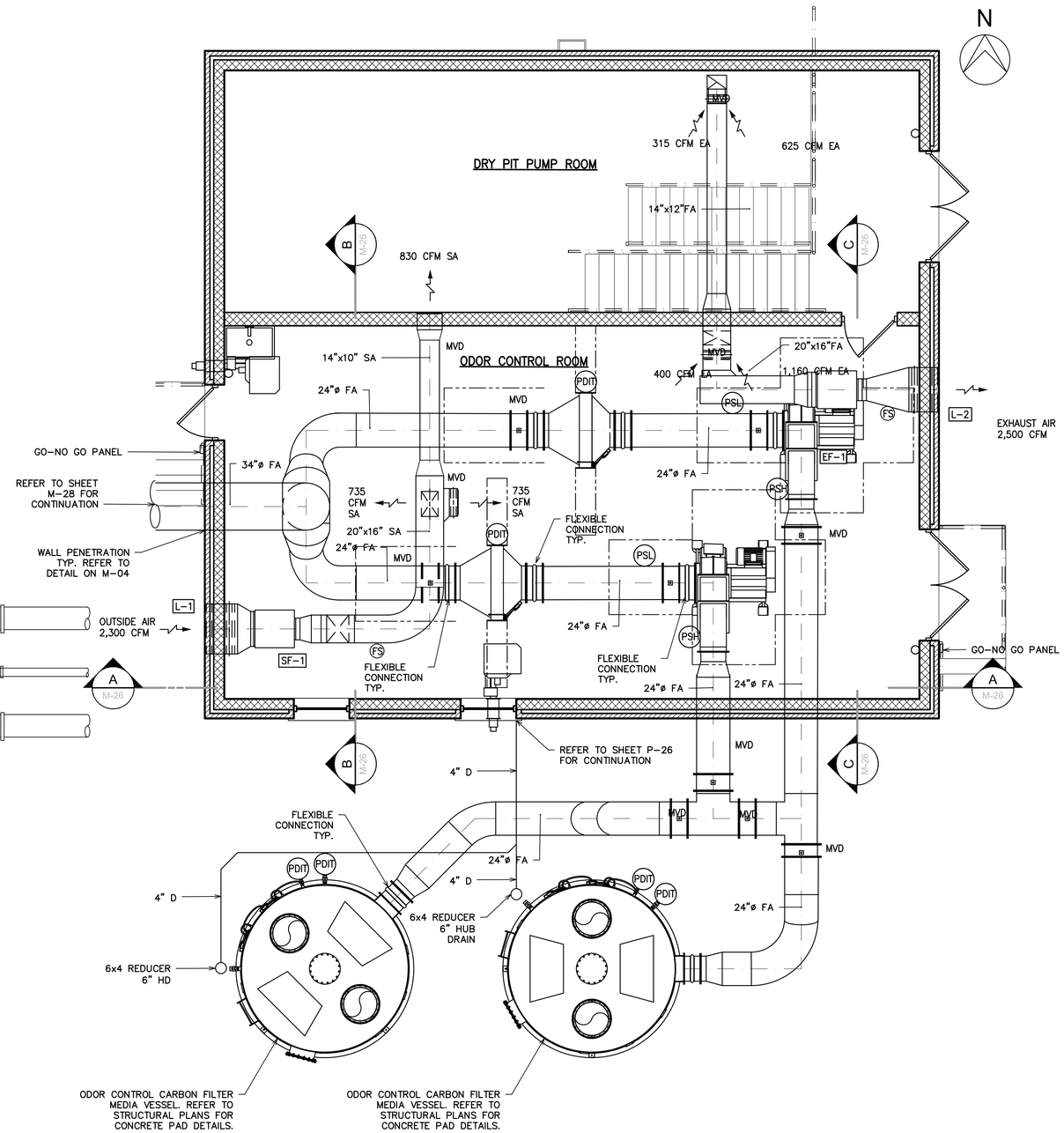

ODOR CONTROL ROOM PLAN @ EL 732.0

SCALE: 1/4" = 1'–0"

Know what's below. Call before you dig.

REV.	DESCRIPTION	DATE	DRAWN	CHECKED
	ISSUED FOR BIDS SET	12–13–2021		
	90% DESIGN SUBMITTAL	11–22–2021		
	70% DESIGN SUBMITTAL	10–29–2021		
	50% DESIGN SUBMITTAL	10–01–2021		

CITY OF ANN ARBOR
PUBLIC SERVICES
301 E. HURON STREET
P.O. BOX 8647
ANN ARBOR, MI 48107-8647
734.794.6410
www.a2gov.org

PROJECT MANAGEMENT - PUBLIC SERVICES - CITY OF ANN ARBOR

HEADWORKS IMPROVEMENTS PROJECT

MISC PLANS AT EL 732.0

SCALE VARIES

DRAWING No. #

SHEET No. M–07

GENERAL NOTES:

1. DROP NEW FOUL AIR DUCT IN OPENING OF EXISTING ROOF CURB. PROVIDE NEW FLASHING CAP FOR CURB. SEAL AROUND DUCT WEATHER TIGHT.
2. PROVIDE CURB ADAPTER FOR MAKE-UP AIR UNIT TO FIT EXISTING ROOF. CURB.
3. DROP NEW FOUL AIR DUCT AND TURN THRU WALL. . SEAL AROUND DUCT WEATHER TIGHT.
4. SLOPE DUCT CONTINUOUSLY AT 1/16" PER FOOT TOWARDS GFMES.
5. COORDINATE DUCT ELEVATIONS WITH EQUIPMENT CONNECTION ELEVATIONS.
6. ALL EXTERIOR DUCTWORK SHALL BE INSULATED.

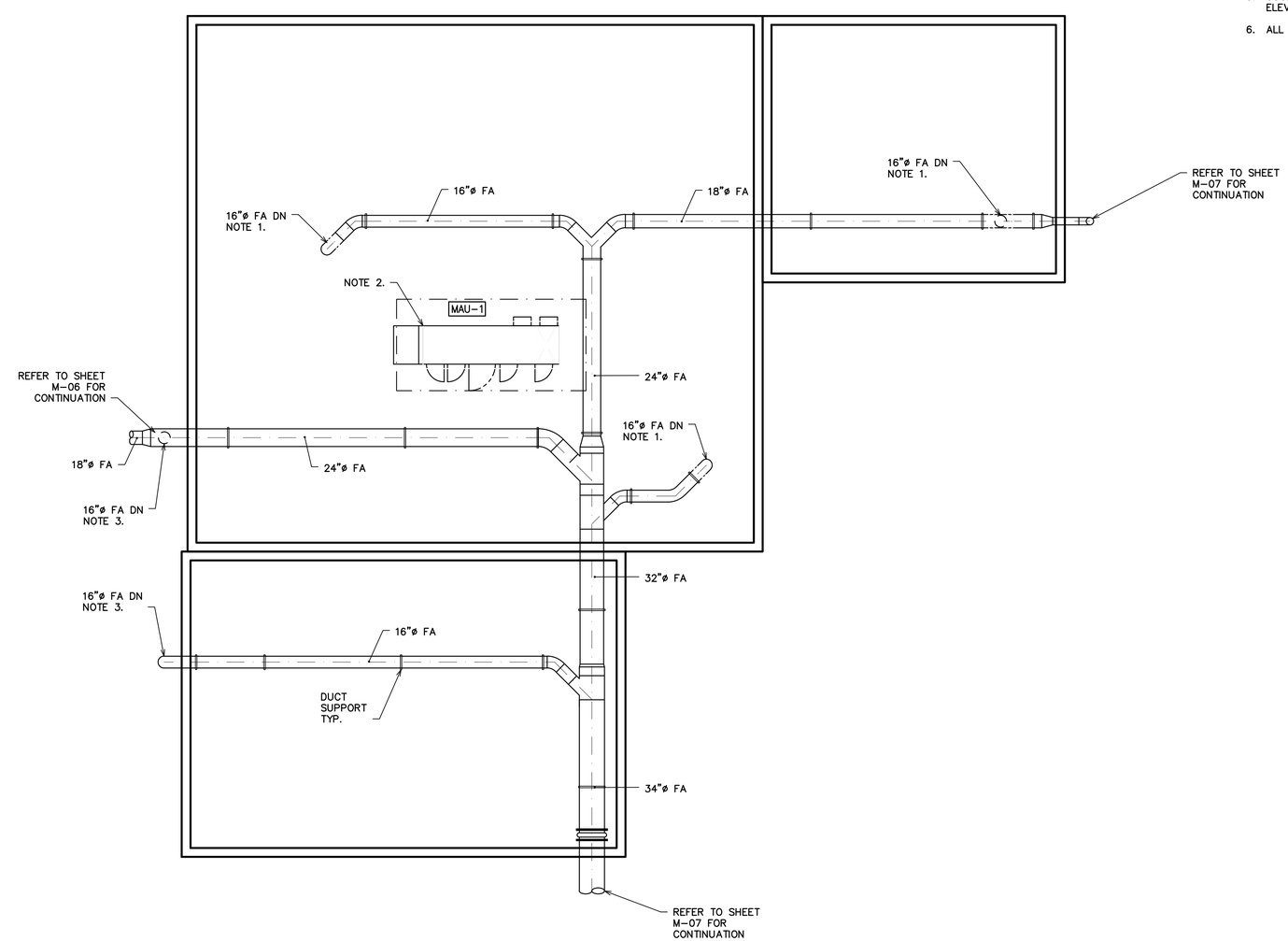

ODOR CONTROL ROOF PLAN

SCALE: 1/8" = 1'-0"

811 Know what's below. Call before you dig.

REV.	DESCRIPTION	DATE	DRAWN	CHECKED
	ISSUED FOR BIDS SET	12-13-2021		
	90% DESIGN SUBMITTAL	11-22-2021		
	70% DESIGN SUBMITTAL	10-29-2021		
	50% DESIGN SUBMITTAL	10-01-2021		

CITY OF ANN ARBOR
PUBLIC SERVICES
301 EAST HURON STREET
P.O. BOX 8647
ANN ARBOR, MI 48107-8647
734.794-6410
www.a2gov.org

PROJECT MANAGEMENT - PUBLIC SERVICES - CITY OF ANN ARBOR

HEADWORKS IMPROVEMENTS PROJECT

ODOR CONTROL ROOF PLAN

SCALE 1/8"=1'-0"

DRAWING No. 615

SHEET No. M-08

N

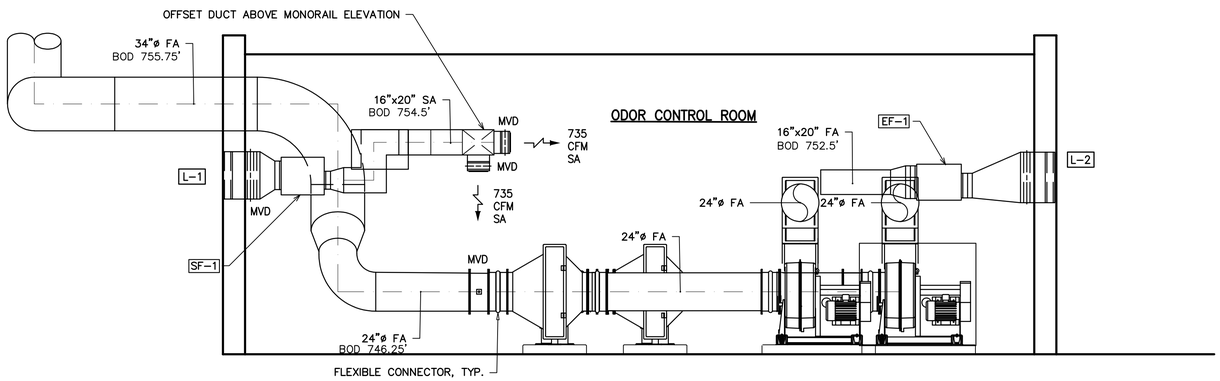

SECTION A

SCALE: 3/8" = 1'-0"

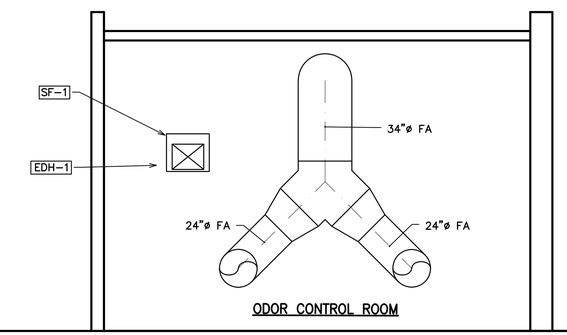

SECTION B

SCALE: 3/8" = 1'-0"

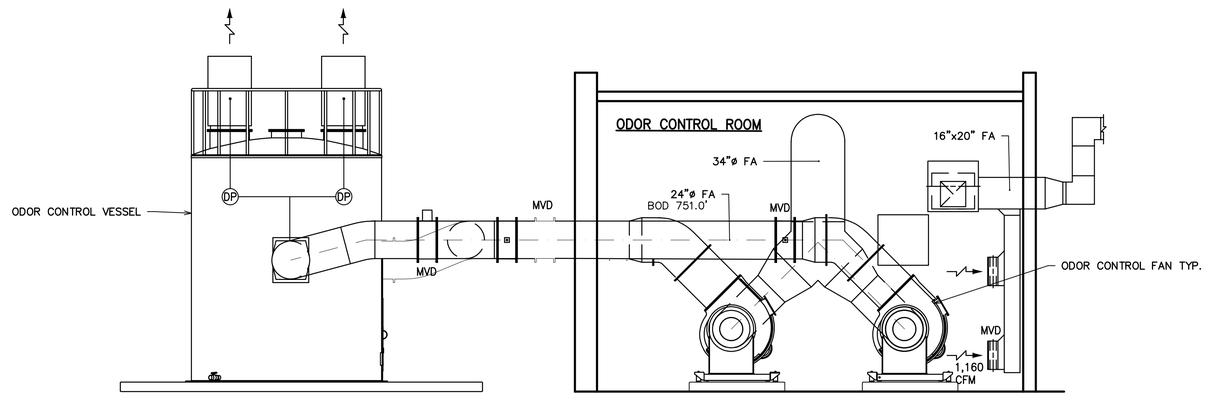

SECTION C

SCALE: 3/8" = 1'-0"

Know what's below. Call before you dig.

REV.	DESCRIPTION	DATE	DRAWN	CHECKED
	50% DESIGN SUBMITTAL	10-01-2021		
	70% DESIGN SUBMITTAL	10-29-2021		
	90% DESIGN SUBMITTAL	11-22-2021		
	ISSUED FOR BIDS SET	12-13-2021		

CITY OF ANN ARBOR
PUBLIC SERVICES
301 EAST HURON STREET
P.O. BOX 8647
ANN ARBOR, MI 48107-8647
734.794.6410
www.a2gov.org

PROJECT MANAGEMENT - PUBLIC SERVICES - CITY OF ANN ARBOR

HEADWORKS IMPROVEMENTS PROJECT

ODOR CONTROL ROOM ELEVATIONS

SCALE 3/8" = 1'-0"

DRAWING No. 617

SHEET No. M-09

EXIST. UNIT SUB NO. 1, XFMR NO. 1

800AF/400AT

ADJUST TRIP ON EXISTING 800AF BREAKER FEEDING EXISTING MCC-C (REUSE NAMEPLATE TO FEED DP-C)

RECONNECT EXIST. EQUIPMENT TO NEW DISTRIBUTION PANEL, REUSE EXIST. WIRE AND CONDUIT WHERE PRACTICAL AND EXTEND EXISTING AS REQUIRED (TYP. EACH EXIST. DEVICE)

NEW DP-C

400A (C-1)

480V, 3P, 3W BUS

80A	15A	20A	15A	20A	20A	150A	15A	30A	60A	15A	30A	30A	50A	200A	30A	15A	30A	30A	SPARE	SPACE
TRANSFORMER 30KVA 480-120/208V				CP	CP	ATS FROM DP-D	30A								30A	30A			SPARE (C-19)	SPARE (C-20)	SPACE (C-21)
						30KVA 480-120/208V										CP				
LIGHTING PANEL LP-C (C-2)	SLUICE GATE NO. 3 S-6-2 (C-3)	ACTUATOR F-8-1 / ACTUATOR F-8-2 (C-4)	SLUICE GATE NO. 4 S-6-1 (C-5)	NORTH GRIT SUMP PUMPS (C-6)	SOUTH GARAGE SUMP PUMPS (C-7)	LIGHTING PANEL LP-LSE (C-8)	SOUTH GARAGE DOOR OPERATOR (C-9)	DOOR OPERATOR (NORTH GARAGE WEST DOOR) (C-10)	WELDER OUTLET (C-11)	ACTUATOR F-8-5 (C-12)	SCREEN/ COMPACTOR NO. 1 CONTROL PANEL (C-13)	SCREEN/ COMPACTOR NO. 2 CONTROL PANEL (C-14)	GRIT REMOVAL SYSTEM NO. 1 CONTROL PANEL (C-15)	ODOR CONTROL DP-E (C-16)	NORTH GRIT TANKS DOOR OPERATOR (C-17)	NORTH GRIT TANKS HOIST (C-18)				

TO NEW ODOR CONTROL DISTRIBUTION PANEL DP-E, SEE ONE-LINE DIAGRAM BELOW

NEW DISTRIBUTION PANEL DP-C ONE-LINE DIAGRAM

N.T.S.

EXIST. UNIT SUB NO. 1, XFMR NO. 2

800AF/400AT

ADJUST TRIP ON EXISTING 800AF BREAKER FEEDING EXISTING MCC-D (REUSE NAMEPLATE TO FEED DP-D)

RECONNECT EXIST. EQUIPMENT TO NEW DISTRIBUTION PANEL, REUSE EXIST. WIRE AND CONDUIT WHERE PRACTICAL AND EXTEND EXISTING AS REQUIRED (TYP. EACH EXIST. DEVICE)

NEW DP-D

400A (D-1)

480V, 3P, 3W BUS

80A	15A	20A	20A	20A	15A	30A	15A	15A	15A	15A	15A	15A	15A	15A	40A	150A	30A	50A	15A	15A	30A	SPARE	SPACE
TRANSFORMER 30KVA 480-120/208V		CP	CP													TO ATS FED FROM DP-C (D-18)			30A	30A			
																			CP	CP			
LIGHTING PANEL LP-D (D-2)	THROTTLING VALVE CONTROLLER (EAST PLANT FLOW CONTROL VALVE) (D-3)	LOWER ALCOVE SUMP PUMPS (D-4)	NORTH DUMPSTER SUMP PUMPS (D-5)	ACTUATOR F-6-4 / ACTUATOR F-7-1 / ACTUATOR F-8-6 (D-6)	NORTH GARAGE EAST DOOR OPERATOR (D-7)	WELDER RECEPTACLE (D-8)	HOIST (D-9)	ACTUATOR (F-3-1) (D-10)	ACTUATOR (F-5-1) (D-11)	ACTUATOR (F-5-2) (D-12)	ACTUATOR (F-6-1) (D-13)	ACTUATOR (F-6-2) (D-14)	ROTORK (F-6-3) (D-15)	SLUICE GATE NO. 5 (D-16)	HEAT RECOVERY UNIT HR-1 (D-17)		SCREEN/ COMPACTOR NO. 3 CONTROL PANEL (D-19)	GRIT REMOVAL SYSTEM NO. 2 CONTROL PANEL (D-20)	MAKE-UP AIR UNIT MAU-1 (D-21)	SOUTH GRIT TANKS HOIST (D-22)	SPARE (D-23)	SPACE (D-24)

NEW DISTRIBUTION PANEL DP-D ONE-LINE DIAGRAM

N.T.S.

(C-17)

NEW DP-E

200A (E-1)

480V, 3P, 3W BUS

30A	40A	40A	15A	15A	30A	20A	30A	30A
TRANSFORMER LT-E 15KVA 480-120/208V			VFD	VFD		CP		
LIGHTING PANEL LP-E (E-2)	ODOR CONTROL PANEL NO. 1 (E-3)	ODOR CONTROL PANEL NO. 2 (E-4)	EXHAUST FAN EF-1 (E-5)	SUPPLY FAN SF-1 (E-6)	UNIT HEATER UH-1 (E-7)	SOUTH GRIT SUMP PUMPS (E-8)	SPARE (E-9)	SPARE (E-10)

NEW DISTRIBUTION PANEL DP-E ONE-LINE DIAGRAM

N.T.S.

811 Know what's below. Call before you dig.

REV.	DESCRIPTION	DATE	DRAWN	CHECKED
	ISSUED FOR BIDS SET	12-13-2021		
	90% DESIGN SUBMITTAL	11-22-2021		
	70% DESIGN SUBMITTAL	10-29-2021		
	50% DESIGN SUBMITTAL	10-01-2021		

CITY OF ANN ARBOR
PUBLIC SERVICES
301 EAST HURON STREET
P.O. BOX 8647
ANN ARBOR, MI 48107-8647
734.794-6410
www.a2gov.org

PROJECT MANAGEMENT - PUBLIC SERVICES - CITY OF ANN ARBOR

HEADWORKS IMPROVEMENTS PROJECT

ELECTRICAL ONE-LINE DIAGRAMS

SCALE N.T.S.

DRAWING No. 700

SHEET No. E-01

NEW DISTRIBUTION PANEL "DP-C" SCHEDULE

480V., 3PH., 3 W., 400 AMP. MAIN AND GROUND BUS

NAMEPLATE ENGRAVING ✳ POS. No.	DESCRIPTION	DESIG.	CONN. LOAD	CONN. AMPS	OVERCURRENT PROTECTION BRKR TRIP	OVERCURRENT PROTECTION POLES	WIRE AND CONDUIT	REMARKS
C-1	MAIN BREAKER				400A	3	3-600KCMIL + #3 GRD., 4"C.	RECONNECT TO SUB 1 BREAKER AND ADJUST TRIP SETTING
C-2	LIGHTING PANEL LP-C		30KVA	36A	80A	3	RECONNECT EXISTING, SPLICE AND EXTEND AS REQUIRED	
C-3	SLUICE GATE NO. 3		1.5HP	3A	15A	3	RECONNECT EXISTING, SPLICE AND EXTEND AS REQUIRED	
C-4	ACTUATOR F-8-1, F-8-2			3A	20A	3	RECONNECT EXISTING, SPLICE AND EXTEND AS REQUIRED	
C-5	SLUICE GATE NO. 4		1.5HP	3A	15A	3	RECONNECT EXISTING, SPLICE AND EXTEND AS REQUIRED	
C-6	NORTH GRIT SUMP PUMPS		2HP	3.4A	20A	3	3-#12 + #12 GRD., 3/4"C.	
C-7	SOUTH GARAGE SUMP PUMPS		2HP	3.4A	20A	3	3-#12 + #12 GRD., 3/4"C.	
C-8	RSLSE BUILDING ATS				150A	3	RECONNECT EXISTING, SPLICE AND EXTEND AS REQUIRED	
C-9	S. GARAGE DOOR OPERATOR		1/3HP	1A	15A	3	3-#12 + #12 GRD., 3/4"C.	
C-10	N. GARAGE W. DOOR OPERATOR		1/3HP	1A	30A	3	RECONNECT EXISTING, SPLICE AND EXTEND AS REQUIRED	
C-11	WELDER RECEPTACLE				30A	3	RECONNECT EXISTING, SPLICE AND EXTEND AS REQUIRED	
C-12	ACTUATOR F-8-5		1.5HP	3A	15A	3	RECONNECT EXISTING, SPLICE AND EXTEND AS REQUIRED	
C-13	SCREEN NO. 1 CONTROL PANEL			6A	30A	3	3-#10 + #10 GRD., 3/4"C.	
C-14	SCREEN NO. 2 CONTROL PANEL			6A	30A	3	3-#10 + #10 GRD., 3/4"C.	
C-15	GRIT REMOVAL SYSTEM NO. 1 CONTROL PANEL			35A	50A	3	3-#8 + #10 GRD., 1"C.	
C-16	ODOR CONTROL DISTRIBUTION PANEL DP-E			97.4A	200A	3	3-3/0 + #6 GRD., 2"C.	
C-17	NORTH GRIT TANKS DOOR OPERATOR		3HP	4.8A	20A	3	3-#12 + #12 GRD., 3/4"C.	
C-18	NORTH GRIT TANKS HOIST		5HP	7.6A	15A	3	3-#12 + #12 GRD., 3/4"C.	
C-19	SPARE				30A	3		
C-20	SPARE				30A	3		
C-21	BUSSED SPACE							
TOTAL CONNECTED LOAD				213.6A				

NEW DISTRIBUTION PANEL "DP-E" SCHEDULE

480V., 3PH., 3 W., 200 AMP. MAIN AND GROUND BUS

NAMEPLATE ENGRAVING ✳ POS. No.	DESCRIPTION	DESIG.	CONN. LOAD	CONN. AMPS	OVERCURRENT PROTECTION BRKR TRIP	OVERCURRENT PROTECTION POLES	WIRE AND CONDUIT	REMARKS
E-1	MAIN BREAKER				200A	3	3-3/0 + #6 GRD., 2"C.	
E-2	LIGHTING TRANSFORMER LT-E		15KVA	18A	30A	3	3-#10 + #10 GRD., 3/4"C.	
E-3	ODOR CONTROL PANEL NO. 1		20HP	27A	40A	3	3-#8 + #10 GRD., 3/4"C.	
E-4	ODOR CONTROL PANEL NO. 2		20HP	27A	40A	3	3-#8 + #10 GRD., 3/4"C.	
E-5	EXHAUST FAN EF-1 VFD		1HP	2A	15A	3	3-#12 + #12 GRD., 3/4"C.	
E-6	SUPPLY FAN SF-1 VFD		1HP	2A	15A	3	3-#12 + #12 GRD., 3/4"C.	
E-7	UNIT HEATER UH-1		15KVA	18A	30A	3	3-#10 + #10 GRD., 3/4"C.	
E-8	SOUTH GRIT SUMP PUMPS		2HP	3.4A	20A	3	3-#12 + #12 GRD., 3/4"C.	
E-9	SPARE				30A	3		
E-10	SPARE				30A	3		
TOTAL CONNECTED LOAD				97.4A				

NEW DISTRIBUTION PANEL "DP-D" SCHEDULE

480V., 3PH., 3 W., 400 AMP. MAIN AND GROUND BUS

NAMEPLATE ENGRAVING ✳ POS. No.	DESCRIPTION	DESIG.	CONN. LOAD	CONN. AMPS	OVERCURRENT PROTECTION BRKR TRIP	OVERCURRENT PROTECTION POLES	WIRE AND CONDUIT	REMARKS
D-1	MAIN BREAKER				400A	3	3-600KCMIL + #3 GRD., 4"C.	RECONNECT TO SUB 1 BREAKER AND ADJUST TRIP SETTING
D-2	LIGHTING PANEL LP-D		30KVA	36A	80A	3	RECONNECT EXISTING, SPLICE AND EXTEND AS REQUIRED	
D-3	EAST PLANT FLOW CONTROL VALVE		1/2HP	1.1A	15A	3	RECONNECT EXISTING, SPLICE AND EXTEND AS REQUIRED	
D-4	LOWER ALCOVE SUMP PUMPS		2HP	3.4A	20A	3	3-#12 + #12 GRD., 3/4"C.	
D-5	NORTH DUMPSTER SUMP PUMPS		2HP	3.4A	20A	3	3-#12 + #12 GRD., 3/4"C.	
D-6	ACTUATOR F-6-4, F-7-1, F-8-6		1.5HP	3A	20A	3	RECONNECT EXISTING, SPLICE AND EXTEND AS REQUIRED	
D-7	N. GARAGE EAST DOOR OPERATOR		1HP	2.1A	15A	3	RECONNECT EXISTING, SPLICE AND EXTEND AS REQUIRED	
D-8	WELDER RECEPTACLE				30A	3	RECONNECT EXISTING, SPLICE AND EXTEND AS REQUIRED	
D-9	HOIST		5.25HP	8A	15A	3	RECONNECT EXISTING, SPLICE AND EXTEND AS REQUIRED	
D-10	ACTUATOR F-3-1		1.5HP	3A	15A	3	RECONNECT EXISTING, SPLICE AND EXTEND AS REQUIRED	
D-11	ACTUATOR F-5-1		1.5HP	3A	15A	3	RECONNECT EXISTING, SPLICE AND EXTEND AS REQUIRED	
D-12	ACTUATOR F-5-2		1.5HP	3A	15A	3	RECONNECT EXISTING, SPLICE AND EXTEND AS REQUIRED	
D-13	ACTUATOR F-6-1		1.5HP	3A	15A	3	RECONNECT EXISTING, SPLICE AND EXTEND AS REQUIRED	
D-14	ACTUATOR F-6-2		1.5HP	3A	15A	3	RECONNECT EXISTING, SPLICE AND EXTEND AS REQUIRED	
D-15	ACTUATOR F-6-3		1.5HP	3A	15A	3	RECONNECT EXISTING, SPLICE AND EXTEND AS REQUIRED	
D-16	SLUICE GATE NO. 5		1.5HP	3A	15A	3	RECONNECT EXISTING, SPLICE AND EXTEND AS REQUIRED	
D-17	HEAT RECOVERY UNIT HR-1		25KVA	30A	40A	3	RECONNECT EXISTING, SPLICE AND EXTEND AS REQUIRED	
D-18	RSLSE BUILDING ATS				150A	3	RECONNECT EXISTING, SPLICE AND EXTEND AS REQUIRED	
D-19	SCREEN NO. 3 CONTROL PANEL			6A	30A	3	3-#10 + #10 GRD., 3/4"C.	
D-20	GRIT REMOVAL SYSTEM NO. 2 CONTROL PANEL			62A	80A	3	3-#4 + #8 GRD., 1 1/4"C.	
D-21	MAKE-UP AIR UNIT MAU-1		5HP	9.6A	15A	3	3-#12 + #12 GRD., 3/4"C.	
D-22	SOUTH GRIT TANKS HOIST		5HP	7.6A	15A	3	3-#12 + #12 GRD., 3/4"C.	
D-23	SPARE				30A	3		
D-24	BUSSED SPACE							
TOTAL CONNECTED LOAD				193.2A				

NEW LIGHTING PANEL "LP-E" SCHEDULE

120/208 V., 3PH., 4W., WITH 60 AMP. MAIN BREAKER, NEUTRAL BUS, & GRD. BUS

CIRC. NO.	BRKR. SIZE	ITEM SERVED	LOAD (WATTS) øX	LOAD (WATTS) øY	LOAD (WATTS) øZ
1	20A	ODOR CONTROL GAS MONITORING PANEL	500		
3	20A	DIFFERENTIAL PRESSURE PANEL		500	
5	20A	ODOR CONTROL SUMP PUMP CONTROL PANEL			500
7	20A	SOUTH GARAGE ELECTRICAL ROOM RECEPTACLES	540		
9	20A	SOUTH GARAGE OVER DOOR LIGHTING		24	
11	20A	SOUTH GARAGE ELECTRICAL ROOM LIGHTING & NORTH AND SOUTH GIRT TANKS DOOR EXIT LIGHTING			126
13	20A	SUPPLY FAN SF-2	187		
15	20A	SPARE			
17	20A	SPARE			
19		SPACE			
21		SPACE			
23		SPACE			
25		SPACE			
27		SPACE			
29		SPACE			
2	20A	ODOR CONTROL BUILDING OVER DOOR LIGHTING	36		
4	20A	ODOR CONTROL DRY PIT LIGHTING		629	
6	20A	ODOR CONTROL ROOM LIGHTING & EXIT LIGHTING			681
8	20A	ODOR CONTROL BUILDING WATER HEATER	480		
10	20A	EXHAUST FAN EF-2		187	
12	20A	SPARE			
14	20A	SPARE			
16		SPACE			
18		SPACE			
20		SPACE			
22		SPACE			
24		SPACE			
26		SPACE			
28		SPACE			
30		SPACE			
		TOTAL CONNECTED LOAD	1743	1340	1307

GENERAL NOTES:

1. THE CONTRACTOR SHALL VISIT THE JOB SITE AND THOROUGHLY CHECK THE FIELD CONDITIONS AND EXISTING ELECTRICAL INSTALLATION AND UTILITIES PRIOR TO A SUBMITTED BID.
2. OTHER PROJECTS ARE, OR MAY BE, UNDER CONSTRUCTION AT THIS SITE, AND THIS CONTRACTOR SHALL COORDINATE WITH THEM SO AS NOT TO DELAY THEIR SCHEDULES OR IMPEDE THEIR WORK.
3. COORDINATE ALL UNDERGROUND WORK WITH NEW AND EXISTING UNDERGROUND UTILITIES BEFORE INSTALLATION. CALL MISS DIG 1-800-482-7171, 72 HOURS BEFORE ANY UNDERGROUND WORK IS DONE.
4. ALL ELECTRICAL WORK SHALL COMPLY WITH N.E.C., AND THE CITY OF ANN ARBOR LOCAL CODES, ORDINANCES, AND REGULATIONS INCLUDING MIOSHA.
5. ALL EMPTY CONDUITS SHALL BE PROVIDED WITH A 1/4" DIA. POLYPROPYLENE FISHLINE.
6. ALL DIRECT BURIED CONDUITS SHALL BE 30" BELOW GRADE (MIN.); AND SHALL SLOPE MINIMUM 3" PER 100' TO STRUCTURES.
7. ALL DIRECT BURIAL CONDUIT SHALL BE RIGID GALVANIZED OR P.V.C. SCH. 40.
8. ALL EXPOSED CONDUIT SHALL BE RIGID GALVANIZED STEEL, INSTALLED WITH WATER-TIGHT CONDUIT FITTINGS. EXPANSION FITTINGS SHALL BE PROVIDED AT ALL TRANSITIONS FROM UNDERGROUND TO EXPOSED CONDUIT.
9. ALL UNDERGROUND CONDUITS SHALL BE P.V.C. EXCEPT WHERE ENTERING STRUCTURES. UNDERGROUND CONDUITS SHALL BE RIGID GALVANIZED STEEL WITHIN 5'-0" OF THE STRUCTURE.
10. IN THE AREA WHERE ELECTRICAL WORK DISTURBS EXISTING SOD, GROUND SHALL BE RE-GRADED AS REQUIRED AND SOD SHALL BE REPAIRED OR REPLACED, AS REQUIRED, TO RETURN THE SITE TO A CONDITION MEETING OR EXCEEDING THAT PRIOR TO THE BEGINNING OF WORK.
11. IN AREAS WITH EXISTING TRESS, THE CONTRACTOR SHALL CAREFULLY EXCAVATE THE CONDUIT RUNS SO AS NOT TO DAMAGE MAIN ROOTS OF TREES. DO NOT CUT OR REMOVE MAIN ROOTS OF TREES, BUT RUN CONDUIT AROUND ROOTS AS MAY BE REQUIRED BY FIELD CONDITIONS.
12. GROUND CONDUCTOR SPLICING AND BONDING SHALL BE ACCOMPLISHED BY THE USE OF EXOTHERMIC WELDING.
13. PROVIDE A GREEN GROUND CONDUCTOR IN ALL SYSTEM CONDUITS, EXCEPT INSTRUMENT SIGNAL AND ALARM CONDUITS. INCLUDING BRANCH CIRCUIT CONDUITS FOR LIGHTING AND RECEPTACLES. GROUND CONDUCTOR SIZING SHALL BE PER N.E.C. TABLE 250.122 (MINIMUM) WHERE NOT SIZED ON THE DRAWINGS.
14. ALL EQUIPMENT SUPPORT PADS (PRECAST & POURED-IN-PLACE) SHALL BE INSTALLED WITH TOP OF PAD 4" MIN. ABOVE FINISHED GRADE/FLOOR.
15. ALL THREADED ELECTRICAL EQUIPMENT (CONDUIT, FITTINGS, BOLTS, SCREWS, ETC.) INSTALLED OUTDOORS SHALL BE COATED WITH ANTI-SEIZE COMPOUND PRIOR TO INSTALLATION.
16. THE EXACT HEIGHT, WIDTH AND DEPTH OF EQUIPMENT SUPPORT RACKS SHALL BE DETERMINED BY SIZE AND NUMBER OF ELECTRICAL DEVICES MOUNTED UPON IT.
17. CONTRACTOR SHALL PROVIDE NAMEPLATES ON ALL DEVICES ON ALL NEW ELECTRICAL EQUIPMENT ENCLOSURES. NAMEPLATES SHALL BE WHITE LAMINATED PLASTIC WITH 1/8" HIGH (MINIMUM) BLOCK LETTERS ENGRAVED TO A BLACK CORE, AND SHALL BE ATTACKED WITH CORROSION-RESISTANT SCREWS.
18. ALL WEATHERPROOF (W.P.) DUPLEX RECEPTACLES SHALL BE INSTALLED SUCH THAT COVER DOORS OPEN UPWARD.
19. ALL SALVAGED MATERIALS SHALL BE TURNED OVER TO THE OWNER OR DISPOSED OF AS DIRECTED BY THE OWNER.
20. HAND DIG WHERE REQUIRED TO LOCATE EXISTING UTILITIES PRIOR TO INSTALLATION OF DIRECT BURIAL CONDUIT.

811 Know what's below. Call before you dig.

REV.	DESCRIPTION	DATE	DRAWN	CHECKED
	ISSUED FOR BIDS SET	12-13-2021		
	90% DESIGN SUBMITTAL	11-22-2021		
	70% DESIGN SUBMITTAL	10-29-2021		
	50% DESIGN SUBMITTAL	10-01-2021		

CITY OF ANN ARBOR
PUBLIC SERVICES
301 EAST HURON STREET
P.O. BOX 8647
ANN ARBOR, MI 48107-8647
(734) 794-6410
www.a2gov.org

PROJECT MANAGEMENT - PUBLIC SERVICES - CITY OF ANN ARBOR

HEADWORKS IMPROVEMENTS PROJECT

ELECTRICAL SCHEDULES

SCALE N.T.S.

DRAWING No. 702

SHEET No. E-02

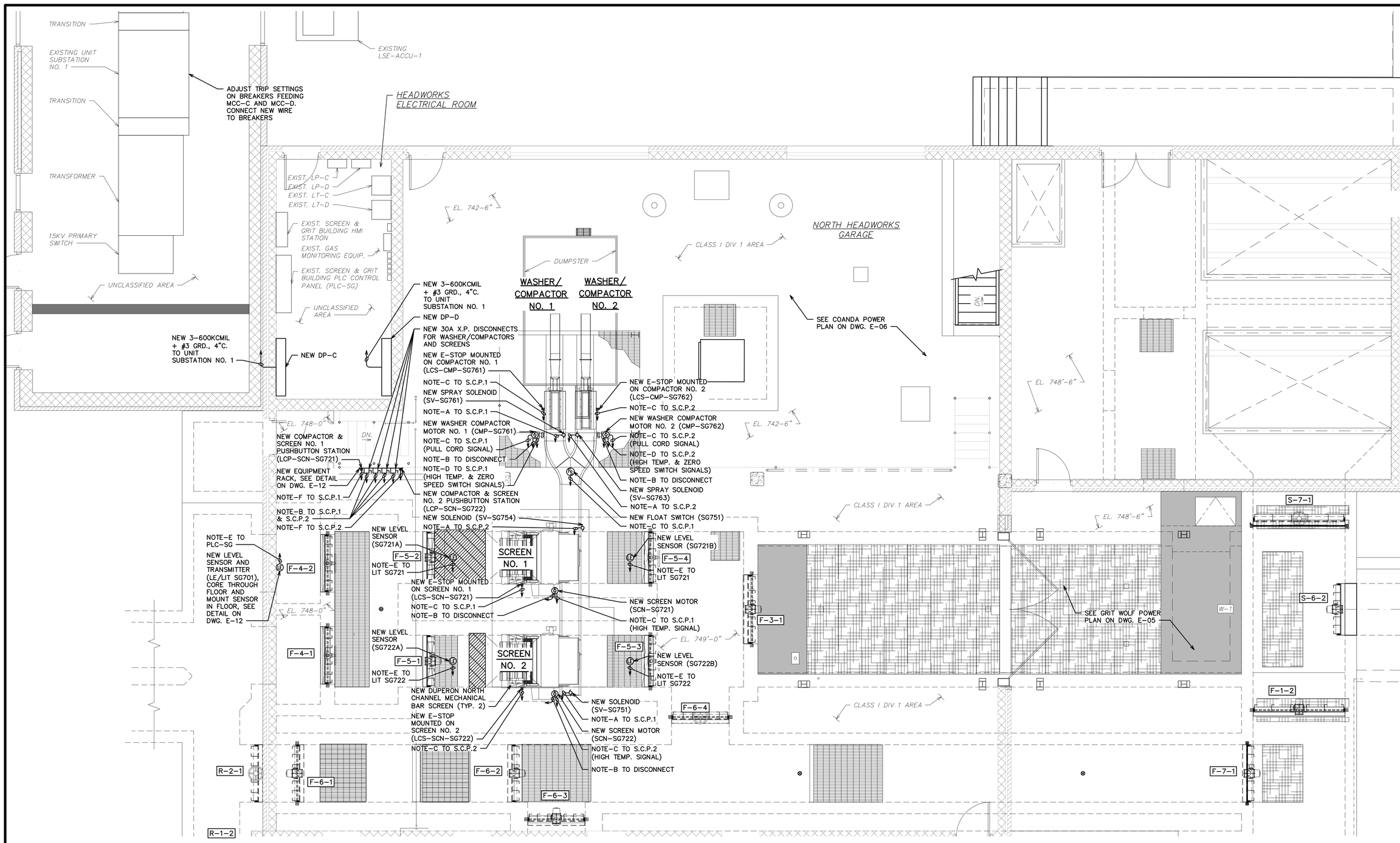

CONDUIT CLASSIFICATION

1. CONDUIT SHALL BE PVC COATED RIGID GALVANIZED STEEL FOR CLASS I DIV. I AREAS.
2. EXPOSED CONDUIT SHALL BE RIGID GALVANIZED STEEL FOR UNCLASSIFIED AREAS.
3. CONDUIT MAY BE LIQUIDTIGHT FLEXIBLE METAL CONDUIT FOR CONNECTIONS TO EQUIPMENT WITHIN 3' AND UP TO EQUIPMENT IN UNCLASSIFIED AREAS.
4. CONDUIT SHALL BE PVC SCHEDULE 40 WHERE RUN UNDERGROUND.
5. CONDUIT MAY BE EXPLOSIONPROOF FLEXIBLE CONDUIT WITHIN 3' AND UP TO EQUIPMENT IN CLASSIFIED AREAS. CONNECTIONS SHALL BE MADE WITH EXPLOSIONPROOF FLEXIBLE CONDUIT COUPLINGS.

NORTH HEADWORKS BUILDING DUPERON POWER PLAN

N

ALL EQUIPMENT SHALL BE EXPLOSIONPROOF, RATED CLASS 1 DIVISION 1 ON THIS DRAWING, EXCEPT FOR IN THE ELECTRICAL ROOM. INSTALL EQUIPMENT, WIRE, CONDUIT, AND SEAL-OFF FITTINGS PER NEC REQUIREMENTS FOR CLASSIFIED AREAS.

PLAN NOTES:

A. NEW 2-#12 + #12 GRD., 3/4"C.
B. NEW 3-#12 + #12 GRD., 1"C. (SHIELDED VFD CABLE)
C. NEW 2-#14, 3/4"C.
D. NEW 4-#14, 3/4"C.
E. NEW 1PR. #18 SHLD, 3/4"C.
F. NEW 11-#14, 3/4"C.
G. NEW CAT6 CABLE, 3/4"C.
H. NEW 3PR. #18 SHLD., 3/4"C.
I. NEW 13-#14, 3/4"C.
J. NEW 3-#8 + #10 GRD., 1 1/2"C. (SHIELDED VFD CABLE)

0 1 2 4 8
SCALE IN FEET

FOR TRUE SCALE PLOT THIS SHEET TO 34" X 22" PAPER SIZE

811 Know what's below. Call before you dig.

REV.	DESCRIPTION	DATE	DRAWN	CHECKED
	ISSUED FOR BIDS SET	12-13-2021		
	90% DESIGN SUBMITTAL	11-22-2021		
	70% DESIGN SUBMITTAL	10-29-2021		
	50% DESIGN SUBMITTAL	10-01-2021		

CITY OF ANN ARBOR
PUBLIC SERVICES
301 EAST HURON STREET
P.O. BOX 8647
ANN ARBOR, MI 48107-8647
734.794.6410
www.a2gov.org

PROJECT MANAGEMENT - PUBLIC SERVICES - CITY OF ANN ARBOR

HEADWORKS IMPROVEMENTS PROJECT
NORTH HEADWORKS BUILDING
DUPERON POWER PLAN

SCALE 1/4" = 1'-0"
DRAWING No. 704

SHEET No. E-03A

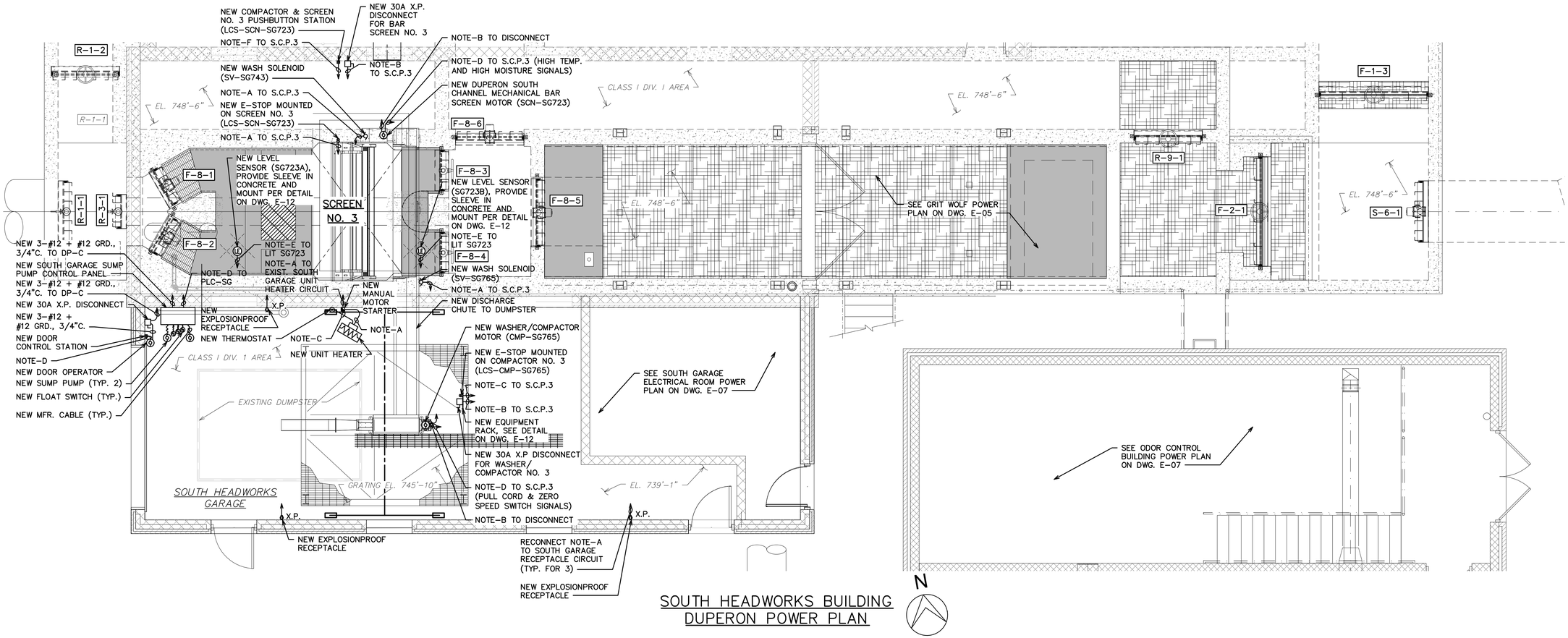

SOUTH HEADWORKS BUILDING DUPERON POWER PLAN

N

CONDUIT CLASSIFICATION

1. CONDUIT SHALL BE PVC COATED RIGID GALVANIZED STEEL FOR CLASS I DIV. I AREAS.
2. EXPOSED CONDUIT SHALL BE RIGID GALVANIZED STEEL FOR UNCLASSIFIED AREAS.
3. CONDUIT MAY BE LIQUIDTIGHT FLEXIBLE METAL CONDUIT FOR CONNECTIONS TO EQUIPMENT WITHIN 3' AND UP TO EQUIPMENT IN UNCLASSIFIED AREAS.
4. CONDUIT SHALL BE PVC SCHEDULE 40 WHERE RUN UNDERGROUND.
5. CONDUIT MAY BE EXPLOSIONPROOF FLEXIBLE CONDUIT WITHIN 3' AND UP TO EQUIPMENT IN CLASSIFIED AREAS. CONNECTIONS SHALL BE MADE WITH EXPLOSIONPROOF FLEXIBLE CONDUIT COUPLINGS.

PLAN NOTES:

A. NEW 2-#12 + #12 GRD., 3/4"C.
B. NEW 3-#12 + #12 GRD., 1"C. (SHIELDED VFD CABLE)
C. NEW 2-#14, 3/4"C.
D. NEW 4-#14, 3/4"C.
E. NEW 1PR. #18 SHLD, 3/4"C.
F. NEW 11-#14, 3/4"C.
G. NEW CAT6 CABLE, 3/4"C.
H. NEW 3PR. #18 SHLD., 3/4"C.
I. NEW 13-#14, 3/4"C.
J. NEW 3-#8 + #10 GRD., 1 1/2"C. (SHIELDED VFD CABLE)

0 1 2 4 8
SCALE IN FEET

FOR TRUE SCALE PLOT THIS SHEET TO 34" X 22" PAPER SIZE

811 Know what's below. Call before you dig.

REV.	DESCRIPTION	DATE	DRAWN	CHECKED
	ISSUED FOR BIDS SET	12-13-2021		
	90% DESIGN SUBMITTAL	11-22-2021		
	70% DESIGN SUBMITTAL	10-29-2021		
	50% DESIGN SUBMITTAL	10-01-2021		

CITY OF ANN ARBOR
PUBLIC SERVICES
301 EAST HURON STREET
P.O. BOX 8647
ANN ARBOR, MI 48107-8647
734.794.6410
www.a2gov.org

PROJECT MANAGEMENT - PUBLIC SERVICES - CITY OF ANN ARBOR

HEADWORKS IMPROVEMENTS PROJECT
SOUTH HEADWORKS BUILDING
DUPERON POWER PLAN

SCALE 1/4" = 1'-0"
DRAWING No. 706

SHEET No. E-04A

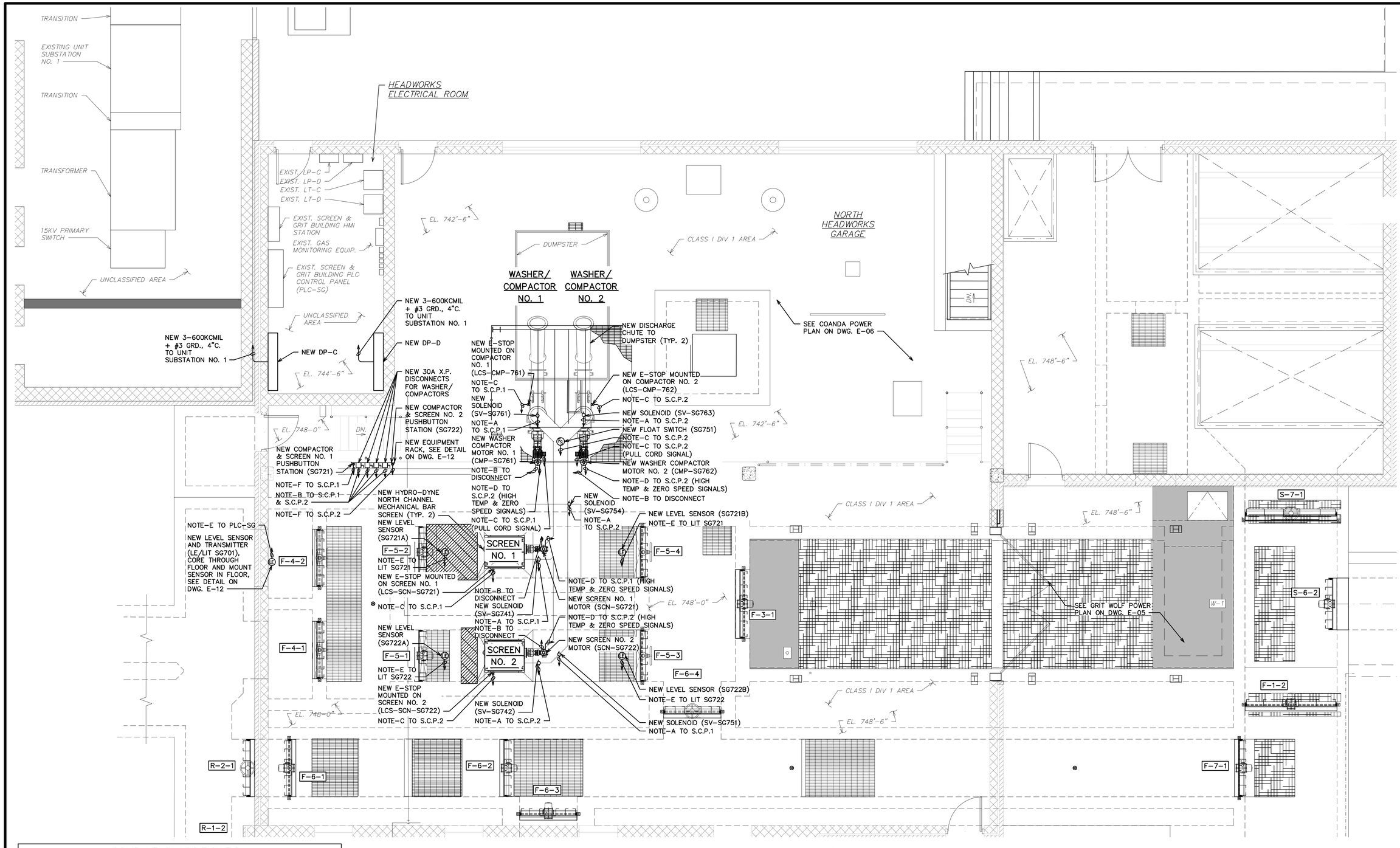

CONDUIT CLASSIFICATION

1. CONDUIT SHALL BE PVC COATED RIGID GALVANIZED STEEL FOR CLASS I DIV. I AREAS.
2. EXPOSED CONDUIT SHALL BE RIGID GALVANIZED STEEL FOR UNCLASSIFIED AREAS.
3. CONDUIT MAY BE LIQUIDTIGHT FLEXIBLE METAL CONDUIT FOR CONNECTIONS TO EQUIPMENT WITHIN 3' AND UP TO EQUIPMENT IN UNCLASSIFIED AREAS.
4. CONDUIT SHALL BE PVC SCHEDULE 40 WHERE RUN UNDERGROUND.
5. CONDUIT MAY BE EXPLOSIONPROOF FLEXIBLE CONDUIT WITHIN 3' AND UP TO EQUIPMENT IN CLASSIFIED AREAS. CONNECTIONS SHALL BE MADE WITH EXPLOSIONPROOF FLEXIBLE CONDUIT COUPLINGS.

NORTH HEADWORKS BUILDING HYDRO-DYNE POWER PLAN

N

ALL EQUIPMENT SHALL BE EXPLOSIONPROOF, RATED CLASS 1 DIVISION 1 ON THIS DRAWING, EXCEPT FOR IN THE ELECTRICAL ROOM. INSTALL EQUIPMENT, WIRE, CONDUIT, AND SEAL-OFF FITTINGS PER NEC REQUIREMENTS FOR CLASSIFIED AREAS.

PLAN NOTES:

A. NEW 2-#12 + #12 GRD., 3/4"C.
B. NEW 3-#12 + #12 GRD., 1"C. (SHIELDED VFD CABLE)
C. NEW 2-#14, 3/4"C.
D. NEW 4-#14, 3/4"C.
E. NEW 1PR. #18 SHLD, 3/4"C.
F. NEW 11-#14, 3/4"C.
G. NEW CAT6 CABLE, 3/4"C.
H. NEW 3PR. #18 SHLD., 3/4"C.
I. NEW 13-#14, 3/4"C.
J. NEW 3-#8 + #10 GRD., 1 1/2"C. (SHIELDED VFD CABLE)

0 1 2 4 8
SCALE IN FEET

FOR TRUE SCALE PLOT THIS SHEET TO 34" X 22" PAPER SIZE

811 Know what's below. Call before you dig.

REV.	DESCRIPTION	DATE	DRAWN	CHECKED
	ISSUED FOR BIDS SET	12-13-2021		
	90% DESIGN SUBMITTAL	11-22-2021		
	70% DESIGN SUBMITTAL	10-29-2021		
	50% DESIGN SUBMITTAL	10-01-2021		

CITY OF ANN ARBOR
PUBLIC SERVICES
301 EAST HURON STREET
P.O. BOX 8647
ANN ARBOR, MI 48107-8647
734.794.6410
www.a2gov.org

PROJECT MANAGEMENT - PUBLIC SERVICES - CITY OF ANN ARBOR

HEADWORKS IMPROVEMENTS PROJECT
NORTH HEADWORKS BUILDING
HYDRO-DYNE POWER PLAN

SCALE 1/4" = 1'-0"
DRAWING No. 708

SHEET No. E-03B

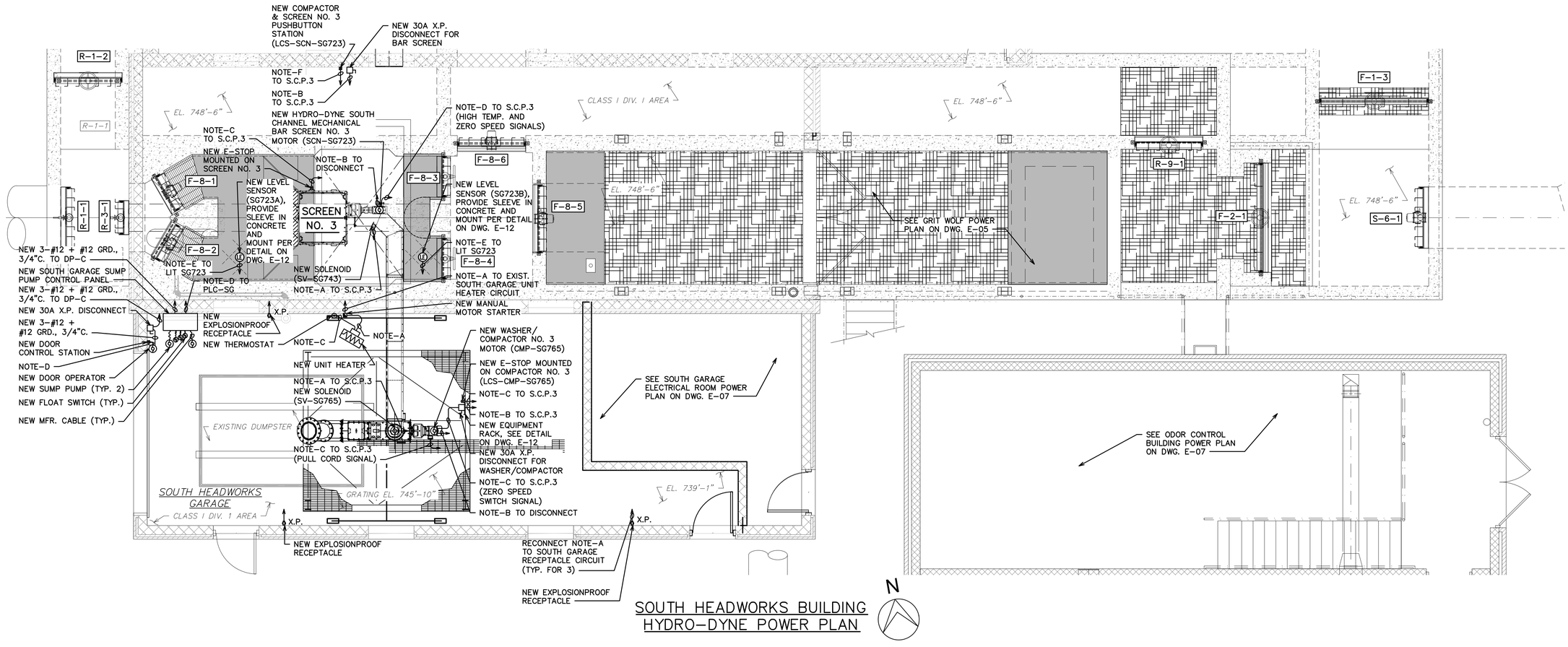

SOUTH HEADWORKS BUILDING HYDRO–DYNE POWER PLAN

N

CONDUIT CLASSIFICATION

1. CONDUIT SHALL BE PVC COATED RIGID GALVANIZED STEEL FOR CLASS I DIV. I AREAS.
2. EXPOSED CONDUIT SHALL BE RIGID GALVANIZED STEEL FOR UNCLASSIFIED AREAS.
3. CONDUIT MAY BE LIQUIDTIGHT FLEXIBLE METAL CONDUIT FOR CONNECTIONS TO EQUIPMENT WITHIN 3' AND UP TO EQUIPMENT IN UNCLASSIFIED AREAS.
4. CONDUIT SHALL BE PVC SCHEDULE 40 WHERE RUN UNDERGROUND.
5. CONDUIT MAY BE EXPLOSIONPROOF FLEXIBLE CONDUIT WITHIN 3' AND UP TO EQUIPMENT IN CLASSIFIED AREAS. CONNECTIONS SHALL BE MADE WITH EXPLOSIONPROOF FLEXIBLE CONDUIT COUPLINGS.

PLAN NOTES:

A. NEW 2–#12 + #12 GRD., 3/4"C.
B. NEW 3–#12 + #12 GRD., 1"C. (SHIELDED VFD CABLE)
C. NEW 2–#14, 3/4"C.
D. NEW 4–#14, 3/4"C.
E. NEW 1PR. #18 SHLD, 3/4"C.
F. NEW 11–#14, 3/4"C.
G. NEW CAT6 CABLE, 3/4"C.
H. NEW 3PR. #18 SHLD., 3/4"C.
I. NEW 13–#14, 3/4"C.
J. NEW 3–#8 + #10 GRD., 1 1/2"C. (SHIELDED VFD CABLE)

0 1 2 4 8
SCALE IN FEET

FOR TRUE SCALE PLOT THIS SHEET TO 34" X 22" PAPER SIZE

811 Know what's below. Call before you dig.

REV.	DESCRIPTION	DATE	DRAWN	CHECKED
	ISSUED FOR BIDS SET	12–13–2021		
	90% DESIGN SUBMITTAL	11–22–2021		
	70% DESIGN SUBMITTAL	10–29–2021		
	50% DESIGN SUBMITTAL	10–01–2021		

CITY OF ANN ARBOR
PUBLIC SERVICES
301 EAST HURON STREET
P.O. BOX 8647
ANN ARBOR, MI 48107–8647
(734) 794–6430
www.a2gov.org

PROJECT MANAGEMENT - PUBLIC SERVICES - CITY OF ANN ARBOR

HEADWORKS IMPROVEMENTS PROJECT
SOUTH HEADWORKS BUILDING
HYDRO–DYNE POWER PLAN

SCALE 1/4" = 1'–0"
DRAWING No. 710
SHEET No. E–04B

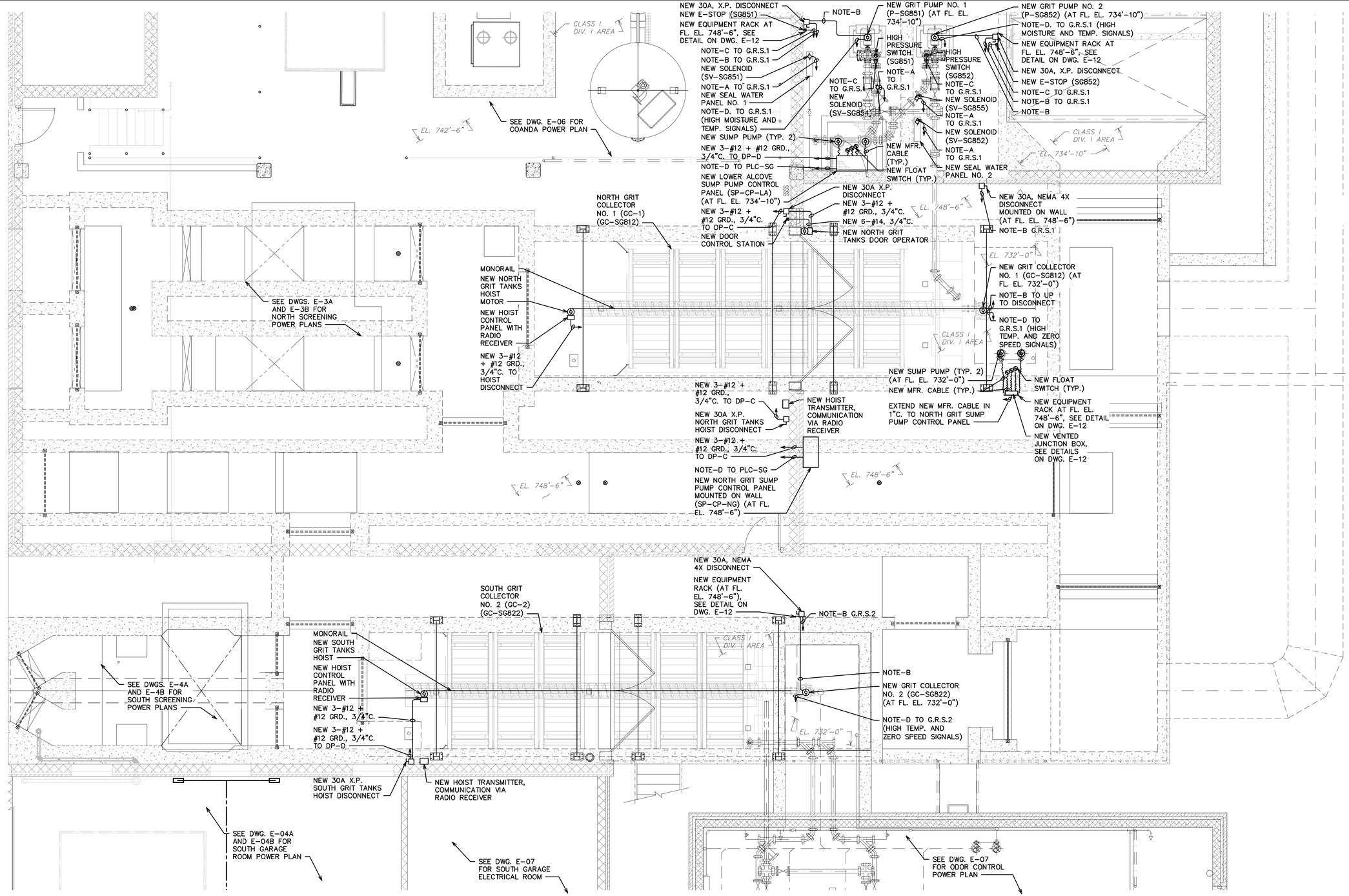

CONDUIT CLASSIFICATION

1. CONDUIT SHALL BE PVC COATED RIGID GALVANIZED STEEL FOR CLASS I DIV. I AREAS.
2. EXPOSED CONDUIT SHALL BE RIGID GALVANIZED STEEL FOR UNCLASSIFIED AREAS.
3. CONDUIT MAY BE LIQUIDTIGHT FLEXIBLE METAL CONDUIT FOR CONNECTIONS TO EQUIPMENT WITHIN 3' AND UP TO EQUIPMENT IN UNCLASSIFIED AREAS.
4. CONDUIT SHALL BE PVC SCHEDULE 40 WHERE RUN UNDERGROUND.
5. CONDUIT MAY BE EXPLOSIONPROOF FLEXIBLE CONDUIT WITHIN 3' AND UP TO EQUIPMENT IN CLASSIFIED AREAS. CONNECTIONS SHALL BE MADE WITH EXPLOSIONPROOF FLEXIBLE CONDUIT COUPLINGS.

NORTH HEADWORKS BUILDING GRIT WOLF & PUMP POWER PLAN

N

PLAN NOTES:

A. NEW 2-#12 + #12 GRD., 3/4"C.
B. NEW 3-#12 + #12 GRD., 1"C. (SHIELDED VFD CABLE)
C. NEW 2-#14, 3/4"C.
D. NEW 4-#14, 3/4"C.
E. NEW 1PR. #18 SHLD, 3/4"C.
F. NEW 11-#14, 3/4"C.
G. NEW CAT6 CABLE, 3/4"C.
H. NEW 3PR. #18 SHLD., 3/4"C.
I. NEW 13-#14, 3/4"C.
J. NEW 3-#8 + #10 GRD., 1 1/2"C. (SHIELDED VFD CABLE)

0 1 2 4 8
SCALE IN FEET

FOR TRUE SCALE PLOT THIS SHEET TO 34" X 22" PAPER SIZE

811 Know what's below. Call before you dig.

REV.	DESCRIPTION	DATE	DRAWN	CHECKED
	ISSUED FOR BIDS SET	12-13-2021		
	90% DESIGN SUBMITTAL	11-22-2021		
	70% DESIGN SUBMITTAL	10-29-2021		
	50% DESIGN SUBMITTAL	10-01-2021		

CITY OF ANN ARBOR
PUBLIC SERVICES
301 EAST HURON STREET
P.O. BOX 8647
ANN ARBOR, MI 48107-8647
(734) 794-6430
www.a2gov.org

PROJECT MANAGEMENT - PUBLIC SERVICES - CITY OF ANN ARBOR

HEADWORKS IMPROVEMENTS PROJECT
NORTH HEADWORKS BUILDING
GRIT WOLF & PUMP POWER PLAN

SCALE 1/4" = 1'-0"
DRAWING No. 712
SHEET No. E-05

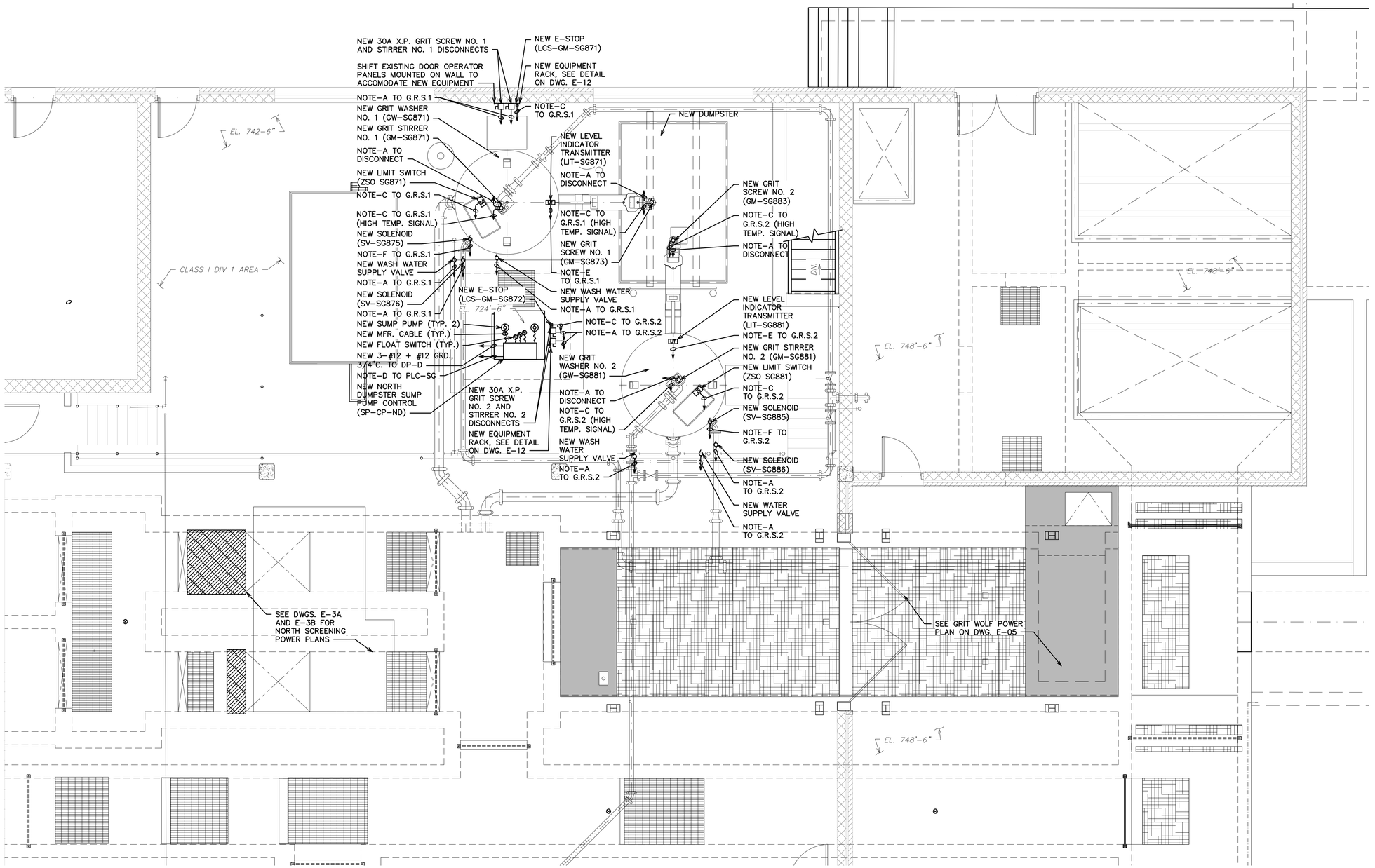

NORTH HEADWORKS BUILDING COANDA POWER PLAN

N

ALL EQUIPMENT SHALL BE EXPLOSIONPROOF, RATED CLASS 1 DIVISION 1 ON THIS DRAWING, EXCEPT FOR IN THE ELECTRICAL ROOM. INSTALL EQUIPMENT, WIRE, CONDUIT, AND SEAL-OFF FITTINGS PER NEC REQUIREMENTS FOR CLASSIFIED AREAS.

CONDUIT CLASSIFICATION

1. CONDUIT SHALL BE PVC COATED RIGID GALVANIZED STEEL FOR CLASS I DIV. I AREAS.
2. EXPOSED CONDUIT SHALL BE RIGID GALVANIZED STEEL FOR UNCLASSIFIED AREAS.
3. CONDUIT MAY BE LIQUIDTIGHT FLEXIBLE METAL CONDUIT FOR CONNECTIONS TO EQUIPMENT WITHIN 3' AND UP TO EQUIPMENT IN UNCLASSIFIED AREAS.
4. CONDUIT SHALL BE PVC SCHEDULE 40 WHERE RUN UNDERGROUND.
5. CONDUIT MAY BE EXPLOSIONPROOF FLEXIBLE CONDUIT WITHIN 3' AND UP TO EQUIPMENT IN CLASSIFIED AREAS. CONNECTIONS SHALL BE MADE WITH EXPLOSIONPROOF FLEXIBLE CONDUIT COUPLINGS.

PLAN NOTES:

A. NEW 2-#12 + #12 GRD., 3/4"C.
B. NEW 3-#12 + #12 GRD., 1"C. (SHIELDED VFD CABLE)
C. NEW 2-#14, 3/4"C.
D. NEW 4-#14, 3/4"C.
E. NEW 1PR. #18 SHLD, 3/4"C.
F. NEW 11-#14, 3/4"C.
G. NEW CAT6 CABLE, 3/4"C.
H. NEW 3PR. #18 SHLD., 3/4"C.
I. NEW 13-#14, 3/4"C.
J. NEW 3-#8 + #10 GRD., 1 1/2"C. (SHIELDED VFD CABLE)

0 1 2 4 8
SCALE IN FEET

FOR TRUE SCALE PLOT THIS SHEET TO 34" X 22" PAPER SIZE

811 Know what's below. Call before you dig.

REV.	DESCRIPTION	DATE	DRAWN	CHECKED
	ISSUED FOR BIDS SET	12-13-2021		
	90% DESIGN SUBMITTAL	11-22-2021		
	70% DESIGN SUBMITTAL	10-29-2021		
	50% DESIGN SUBMITTAL	10-01-2021		

CITY OF ANN ARBOR
PUBLIC SERVICES
301 EAST HURON STREET
P.O. BOX 8647
ANN ARBOR, MI 48107-8647
(734) 794-6430
www.a2gov.org

PROJECT MANAGEMENT - PUBLIC SERVICES - CITY OF ANN ARBOR

HEADWORKS IMPROVEMENTS PROJECT

NORTH HEADWORKS BUILDING
COANDA POWER PLAN

SCALE 1/4" = 1'-0"

DRAWING No. 714

SHEET No. E-06

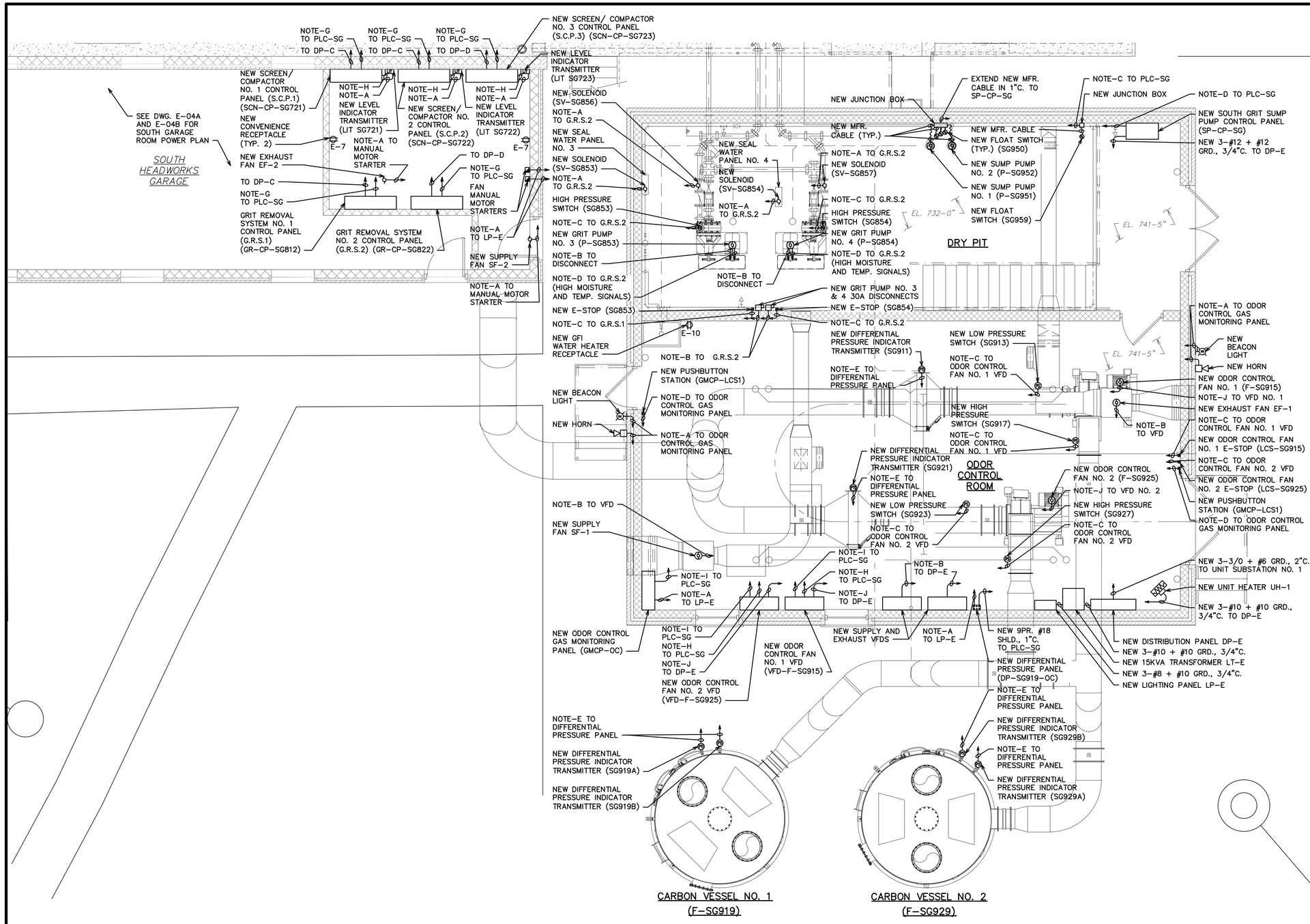

ODOR CONTROL BUILDING POWER PLAN

ALL EQUIPMENT SHALL BE EXPLOSIONPROOF, RATED CLASS 1 DIVISION 1 ON THIS DRAWING, EXCEPT FOR IN THE ELECTRICAL ROOM OR EQUIPMENT MOUNTED OUTSIDE. INSTALL EQUIPMENT, WIRE, CONDUIT, AND SEAL-OFF FITTINGS PER NEC REQUIREMENTS FOR CLASSIFIED AREAS.

CONDUIT CLASSIFICATION

1. CONDUIT SHALL BE PVC COATED RIGID GALVANIZED STEEL FOR CLASS I DIV. I AREAS.
2. EXPOSED CONDUIT SHALL BE RIGID GALVANIZED STEEL FOR UNCLASSIFIED AREAS.
3. CONDUIT MAY BE LIQUIDTIGHT FLEXIBLE METAL CONDUIT FOR CONNECTIONS TO EQUIPMENT WITHIN 3' AND UP TO EQUIPMENT IN UNCLASSIFIED AREAS.
4. CONDUIT SHALL BE PVC SCHEDULE 40 WHERE RUN UNDERGROUND.
5. CONDUIT MAY BE EXPLOSIONPROOF FLEXIBLE CONDUIT WITHIN 3' AND UP TO EQUIPMENT IN CLASSIFIED AREAS. CONNECTIONS SHALL BE MADE WITH EXPLOSIONPROOF FLEXIBLE CONDUIT COUPLINGS.

PLAN NOTES:

A. NEW 2-#12 + #12 GRD., 3/4"C.
B. NEW 3-#12 + #12 GRD., 1"C. (SHIELDED VFD CABLE)
C. NEW 2-#14, 3/4"C.
D. NEW 4-#14, 3/4"C.
E. NEW 1PR. #18 SHLD, 3/4"C.
F. NEW 11-#14, 3/4"C.
G. NEW CAT6 CABLE, 3/4"C.
H. NEW 3PR. #18 SHLD., 3/4"C.
I. NEW 13-#14, 3/4"C.
J. NEW 3-#8 + #10 GRD., 1 1/2"C. (SHIELDED VFD CABLE)

0 1 2 4 8
SCALE IN FEET

FOR TRUE SCALE PLOT THIS SHEET TO 34" X 22" PAPER SIZE

811 Know what's below. Call before you dig.

REV.	DESCRIPTION	DATE	DRAWN	CHECKED
	ISSUED FOR BIDS SET	12-13-2021		
	90% DESIGN SUBMITTAL	11-22-2021		
	70% DESIGN SUBMITTAL	10-29-2021		
	50% DESIGN SUBMITTAL	10-01-2021		

CITY OF ANN ARBOR
PUBLIC SERVICES
301 EAST HURON STREET
P.O. BOX 8647
ANN ARBOR, MI 48107-8647
734.794.6410
www.a2gov.org

PROJECT MANAGEMENT - PUBLIC SERVICES - CITY OF ANN ARBOR

HEADWORKS IMPROVEMENTS PROJECT

ODOR CONTROL BUILDING
POWER PLAN

SCALE 1/4" = 1'-0"

DRAWING No. 716

SHEET No. E-07

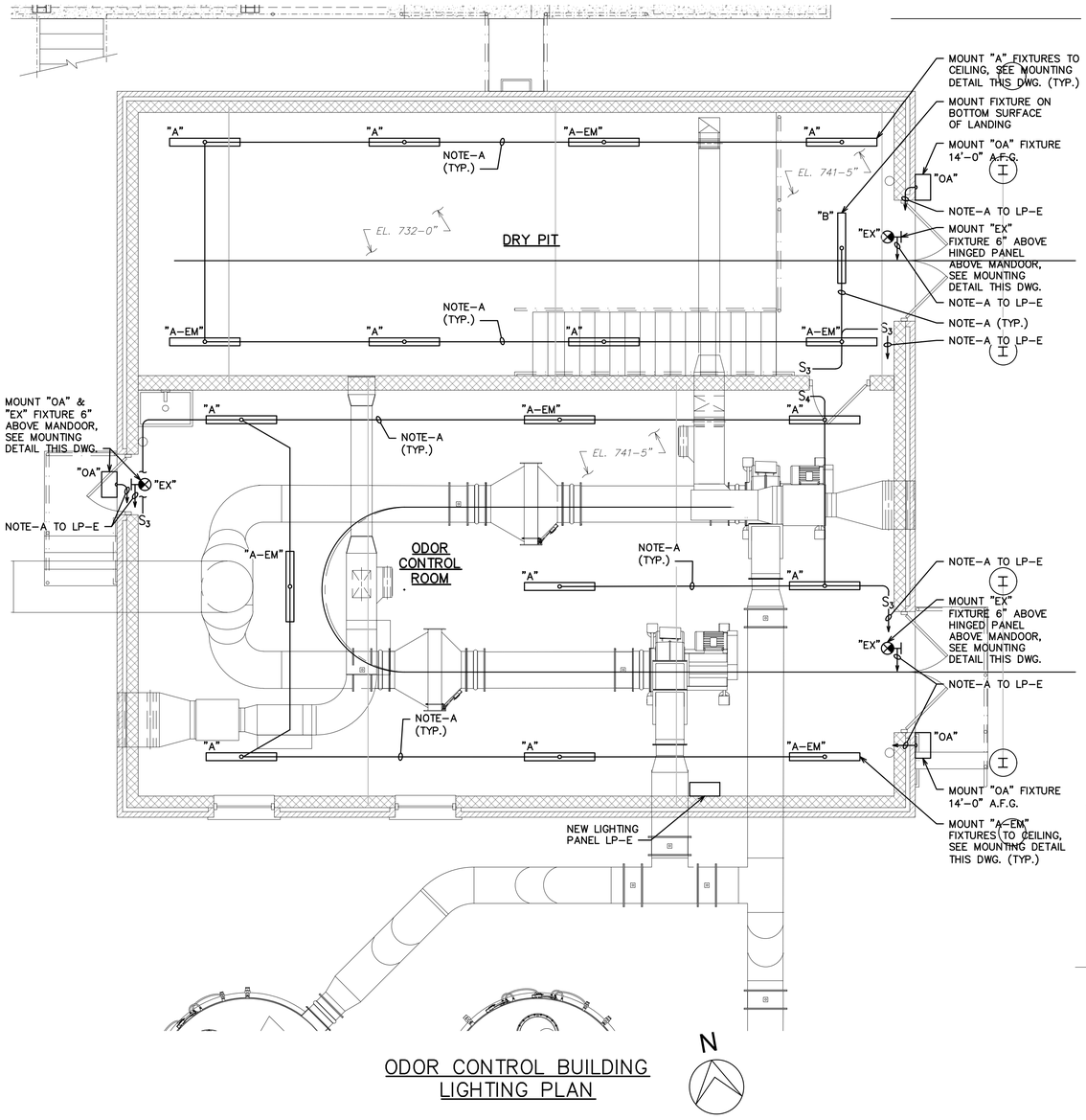

ODOR CONTROL BUILDING
LIGHTING PLAN

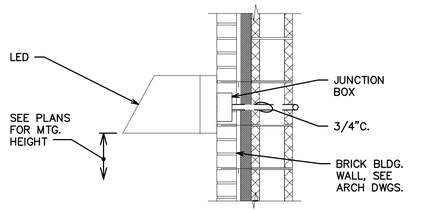

TYPE "OA" MOUNTING DETAIL
N.T.S.

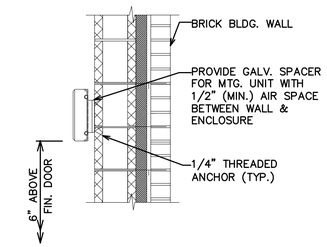

EXIT LTG. FIXTURE TYPE "EX"
SIDE-VIEW MOUNTING DETAIL
N.T.S.

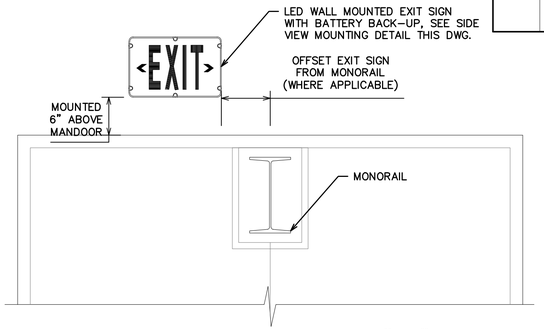

EXIT LTG. FIXTURE TYPE "EX"
FRONT-VIEW MOUNTING DETAIL
N.T.S.
("EX-XP" FIXTURES MOUNTED SIMILAR WHERE APPLICABLE)

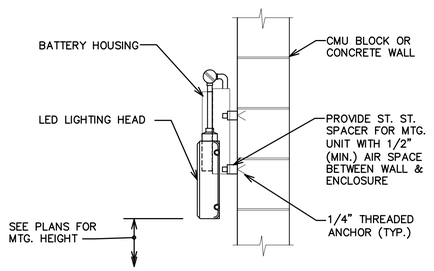

TYPE "EX-XP" MOUNTING DETAIL
N.T.S.

LIGHTING FIXTURE SCHEDULE

TYPE	LAMP	OPERATING VOLTAGE	DESCRIPTION	MFR. CAT. NO.
"A"	75 WATT 8000 LUMENS LED 4000K	120-277V. 1PH.	LED LOW BAY 4' LINEAR LIGHT FIXTURE WITH 20-GAUGE STEEL FULL-BODY HOUSING. FINISH IS HIGH-GLOSS, BAKED WHITE ENAMEL FINISH. LIGHT DISTRIBUTION HAS 0-60° ZONE WITH DIFFUSE ACRYLIC LENS. DRIVER HAS 0-10V DIMMABLE CONTROLS. LISTED FOR DAMP AND DRY LOCATIONS WITH 5-YEAR LIMITED WARRANTY.	LITHONIA: MSL 8000LM SBL MVOLT GZ10 40K 80CRI WH OR APPROVED EQUAL
"A-EM"	75 WATT 8000 LUMENS LED 4000K	120-277V. 1PH.	SAME AS TYPE "A" EXCEPT PROVIDE 7W EMERGENCY BATTERY PACK.	LITHONIA: MSL 8000LM SBL MVOLT GZ10 40K 80CRI E7W WH OR APPROVED EQUAL
"B"	29 WATT 4000 LUMENS LED 4000K	120-277V. 1PH.	SAME AS FIXTURE "A" EXCEPT 4000 LUMEN LED OUTPUT.	LITHONIA: MSL 4000LM SBL MVOLT GZ10 40K 80CRI WH OR APPROVED EQUAL
"C-XP"	55 WATT 5600 LUMENS LED 5000K	120-277V. 1PH.	LED JELLY JAR SHAPED, BAKED POWER EPOXY/ POLYESTER FINISH, STAINLESS STEEL, CEILING-MOUNTED LIGHT FIXTURE. RATED EXPLOSIONPROOF FOR CLASS 1, DIV. 1 LOCATIONS. FIXTURE HAS LENS GUARD.	HUBBELL-KILLARK: EZL5530X2GAN OR APPROVED EQUAL
"OA"	12 WATT 1500 LUMENS LED 4000K	120V-277V. 1PH.	ARCHITECTURAL WALL SCONCE LUMINAIRE, SINGLE-PIECE, DIE CAST ALUMINUM HOUSING, POWDER COAT FINISH, DARK BRONZE, WITH MOUNTING PLATE, IP65 RATED. EMERGENCY 7W BATTERY BACKUP AND 5-YEAR LIMITED WARRANTY INCLUDED.	LITHONIA: WST LED P1 VW 40K MVOLT E7WC DDBXD OR APPROVED EQUAL
"EX"	2.5 WATT	120V. 1PH.	LED WALL MOUNTED EXIT SIGN, MOLDED THERMOPLASTIC HOUSING, RED LETTERING, SNAP IN/ OUT CHEVRONS, LONG-LIFE LEDS, ADVANCED DIAGNOSTICS, NICKEL-CADMIUM BATTERY, UL LISTED FOR DAMP LOCATIONS, ROHS COMPLIANT, SURGE SUPPRESSOR, 5 YEAR WARRANTY ON ALL COMPONENTS.	EMERGI-LITE: PREMIER SERIES WPREMSNXDNR OR APPROVED EQUAL
"EX-XP"	3W. LED 6VDC	120V. 1PH.	LED SURFACE MOUNTED, SINGLE SIDED EXIT SIGN, CLASS I, DIVISION 1 RATED, HEAVY CAST ALUMINUM HOUSING, HEAVY DUTY 20 GAUGE STEEL FACEPLATE WITH BAKED ENAMEL GRAY FINISH FOR EXIT SIGN, 6 INCH RED LETTERING,FIELD SELECTABLE CHEVRONS, LONG-LIFE LEDS, ROHS COMPLIANT, UL LISTED, SUITABLE FOR WET LOCATIONS, ALL STAINLESS STEEL HARDWARE, SURGE SUPPRESSOR, 5 YEAR WARRANTY ON ALL COMPONENTS.	EMERGI-LITE: 6EXC1-TS-T1LR; RIG-A-LITE OR APPROVED EQUAL

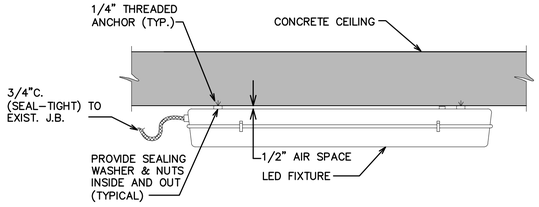

TYPE "A" MOUNTING DETAIL
N.T.S.
("A-EM" AND "B" FIXTURES MOUNTED SIMILAR)

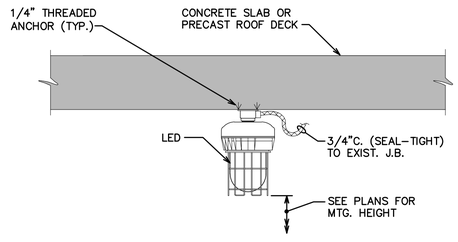

TYPE "C-XP" MOUNTING DETAIL
N.T.S.

BASIS OF DESIGN

THIS LIGHTING PLAN WAS DESIGNED USING AGI32 VERSION 19.15.2. LIGHTING LEVELS HAVE BEEN DETERMINED FROM IES RECOMMENDATIONS. LIGHTING LEVELS AT FINISHED FLOOR LEVEL FOR THE DRY PIT AND ODOR CONTROL ROOM SHALL BE 30.0 FOOTCANDLES AVERAGE ±3.0 FOOTCANDLES. THIS LIGHTING PLAN IS BASED UPON THE SPECIFIED LIGHT FIXTURES ON THIS DRAWING. OTHER FIXTURES ARE ACCEPTABLE UPON SUBMITTAL OF A PHOTOMETRIC PLAN MATCHING THE LIGHTING LEVELS SPECIFIED ABOVE, MEETING SPECIFICATION REQUIREMENTS AS SHOWN ON THIS DRAWING, AND ENGINEER'S APPROVAL.

CONDUIT CLASSIFICATION

1. CONDUIT SHALL BE PVC COATED RIGID GALVANIZED STEEL FOR CLASS I DIV. I AREAS.
2. EXPOSED CONDUIT SHALL BE RIGID GALVANIZED STEEL FOR UNCLASSIFIED AREAS.
3. CONDUIT MAY BE LIQUIDTIGHT FLEXIBLE METAL CONDUIT FOR CONNECTIONS TO EQUIPMENT WITHIN 3' AND UP TO EQUIPMENT IN UNCLASSIFIED AREAS.
4. CONDUIT SHALL BE PVC SCHEDULE 40 WHERE RUN UNDERGROUND.
5. CONDUIT MAY BE EXPLOSIONPROOF FLEXIBLE CONDUIT WITHIN 3' AND UP TO EQUIPMENT IN CLASSIFIED AREAS. CONNECTIONS SHALL BE MADE WITH EXPLOSIONPROOF FLEXIBLE CONDUIT COUPLINGS.

PLAN NOTES:

A. NEW 2-#12 + #12 GRD., 3/4"C.
B. NEW 3-#12 + #12 GRD., 1"C. (SHIELDED VFD CABLE)
C. NEW 2-#14, 3/4"C.
D. NEW 4-#14, 3/4"C.
E. NEW 1PR. #18 SHLD, 3/4"C.
F. NEW 11-#14, 3/4"C.
G. NEW CAT6 CABLE, 3/4"C.
H. NEW 3PR. #18 SHLD., 3/4"C.
I. NEW 13-#14, 3/4"C.
J. NEW 3-#8 + #10 GRD., 1 1/2"C. (SHIELDED VFD CABLE)

SCALE IN FEET

Know what's below. Call before you dig. 811

REV.	DESCRIPTION	DATE	DRAWN	CHECKED
	ISSUED FOR BIDS SET	12-13-2021		
	90% DESIGN SUBMITTAL	11-22-2021		
	70% DESIGN SUBMITTAL	10-29-2021		
	50% DESIGN SUBMITTAL	10-01-2021		

CITY OF ANN ARBOR
PUBLIC SERVICES
301 E. HURON STREET
P.O. BOX 8647
ANN ARBOR, MI 48107-8647
(734) 794-6430
www.a2gov.org

PROJECT MANAGEMENT - PUBLIC SERVICES - CITY OF ANN ARBOR
HEADWORKS IMPROVEMENTS PROJECT
ODOR CONTROL BUILDING
LIGHTING PLAN

SCALE 1/4" = 1'-0"
DRAWING No. 718
SHEET No. E-08

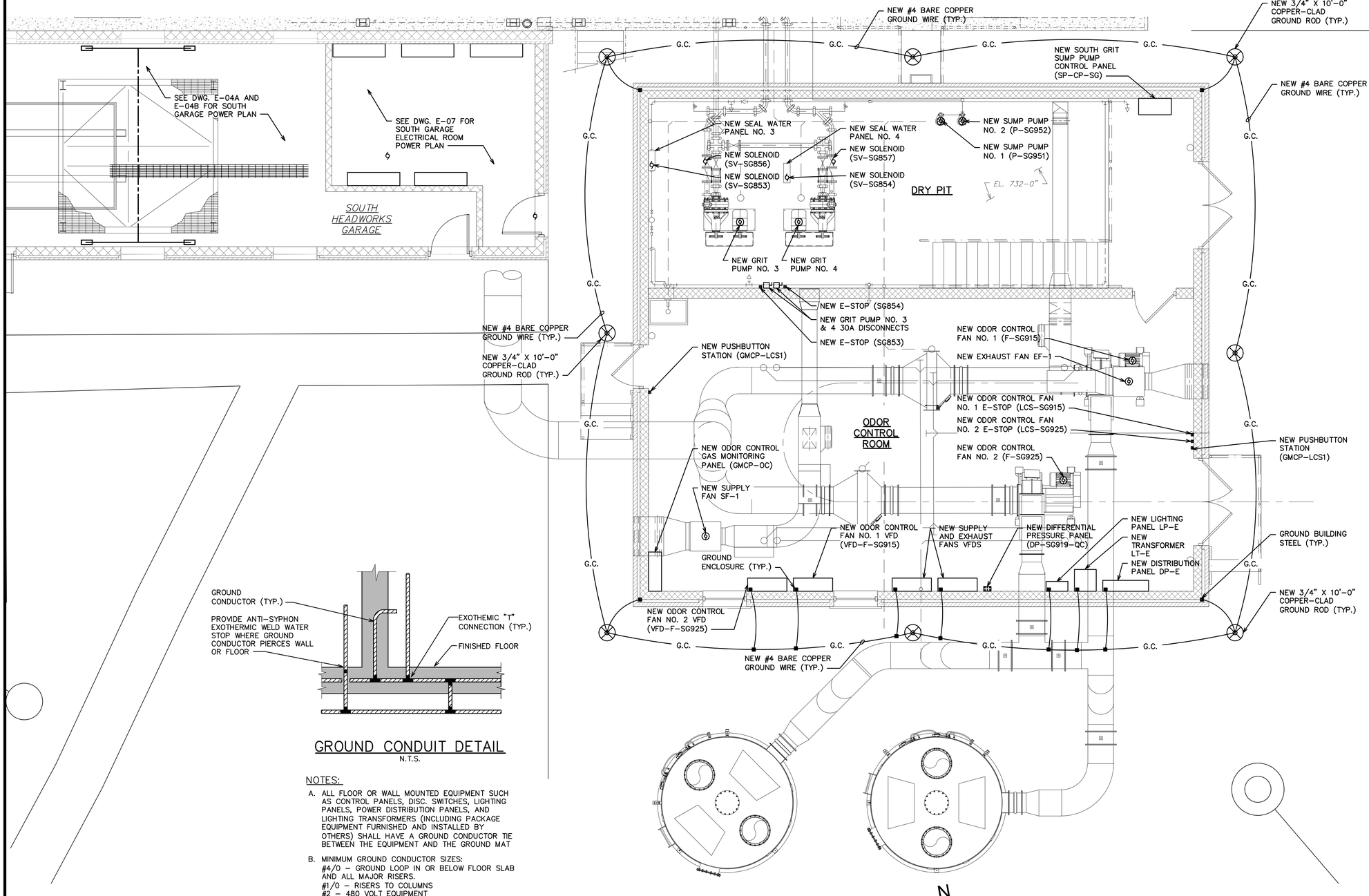

GROUND CONDUIT DETAIL

N.T.S.

NOTES:

A. ALL FLOOR OR WALL MOUNTED EQUIPMENT SUCH AS CONTROL PANELS, DISC. SWITCHES, LIGHTING PANELS, POWER DISTRIBUTION PANELS, AND LIGHTING TRANSFORMERS (INCLUDING PACKAGE EQUIPMENT FURNISHED AND INSTALLED BY OTHERS) SHALL HAVE A GROUND CONDUCTOR TIE BETWEEN THE EQUIPMENT AND THE GROUND MAT

B. MINIMUM GROUND CONDUCTOR SIZES:
#4/0 – GROUND LOOP IN OR BELOW FLOOR SLAB AND ALL MAJOR RISERS.
#1/0 – RISERS TO COLUMNS
#2 – 480 VOLT EQUIPMENT
#6 – 120 VOLT EQUIPMENT

CONDUIT CLASSIFICATION

1. CONDUIT SHALL BE PVC COATED RIGID GALVANIZED STEEL FOR CLASS I DIV. I AREAS.
2. EXPOSED CONDUIT SHALL BE RIGID GALVANIZED STEEL FOR UNCLASSIFIED AREAS.
3. CONDUIT MAY BE LIQUIDTIGHT FLEXIBLE METAL CONDUIT FOR CONNECTIONS TO EQUIPMENT WITHIN 3' AND UP TO EQUIPMENT IN UNCLASSIFIED AREAS.
4. CONDUIT SHALL BE PVC SCHEDULE 40 WHERE RUN UNDERGROUND.
5. CONDUIT MAY BE EXPLOSIONPROOF FLEXIBLE CONDUIT WITHIN 3' AND UP TO EQUIPMENT IN CLASSIFIED AREAS. CONNECTIONS SHALL BE MADE WITH EXPLOSIONPROOF FLEXIBLE CONDUIT COUPLINGS.

ODOR CONTROL BUILDING GROUNDING PLAN

ALL EQUIPMENT SHALL BE EXPLOSIONPROOF, RATED CLASS 1 DIVISION 1 ON THIS DRAWING, EXCEPT FOR IN THE ELECTRICAL ROOM. INSTALL EQUIPMENT, WIRE, CONDUIT, AND SEAL-OFF FITTINGS PER NEC REQUIREMENTS FOR CLASSIFIED AREAS.

PLAN NOTES:

A. NEW 2–#12 + #12 GRD., 3/4"C.
B. NEW 3–#12 + #12 GRD., 1"C. (SHIELDED VFD CABLE)
C. NEW 2–#14, 3/4"C.
D. NEW 4–#14, 3/4"C.
E. NEW 1PR. #18 SHLD, 3/4"C.
F. NEW 11–#14, 3/4"C.
G. NEW CAT6 CABLE, 3/4"C.
H. NEW 3PR. #18 SHLD., 3/4"C.
I. NEW 13–#14, 3/4"C.
J. NEW 3–#8 + #10 GRD., 1 1/2"C. (SHIELDED VFD CABLE)

0 1 2 4 8
SCALE IN FEET

FOR TRUE SCALE PLOT THIS SHEET TO 34" X 22" PAPER SIZE

811 Know what's below. Call before you dig.

REV.	DESCRIPTION	DATE	DRAWN	CHECKED
	ISSUED FOR BIDS SET	12-13-2021		
	90% DESIGN SUBMITTAL	11-22-2021		
	70% DESIGN SUBMITTAL	10-29-2021		
	50% DESIGN SUBMITTAL	10-01-2021		

CITY OF ANN ARBOR
PUBLIC SERVICES
301 EAST HURON STREET
P.O. BOX 8647
ANN ARBOR, MI 48107-8647
734.794.6410
www.a2gov.org

PROJECT MANAGEMENT - PUBLIC SERVICES - CITY OF ANN ARBOR

HEADWORKS IMPROVEMENTS PROJECT

ODOR CONTROL BUILDING GROUNDING PLAN

SCALE 1/4" = 1'-0"

DRAWING No. 720

SHEET No. E-09

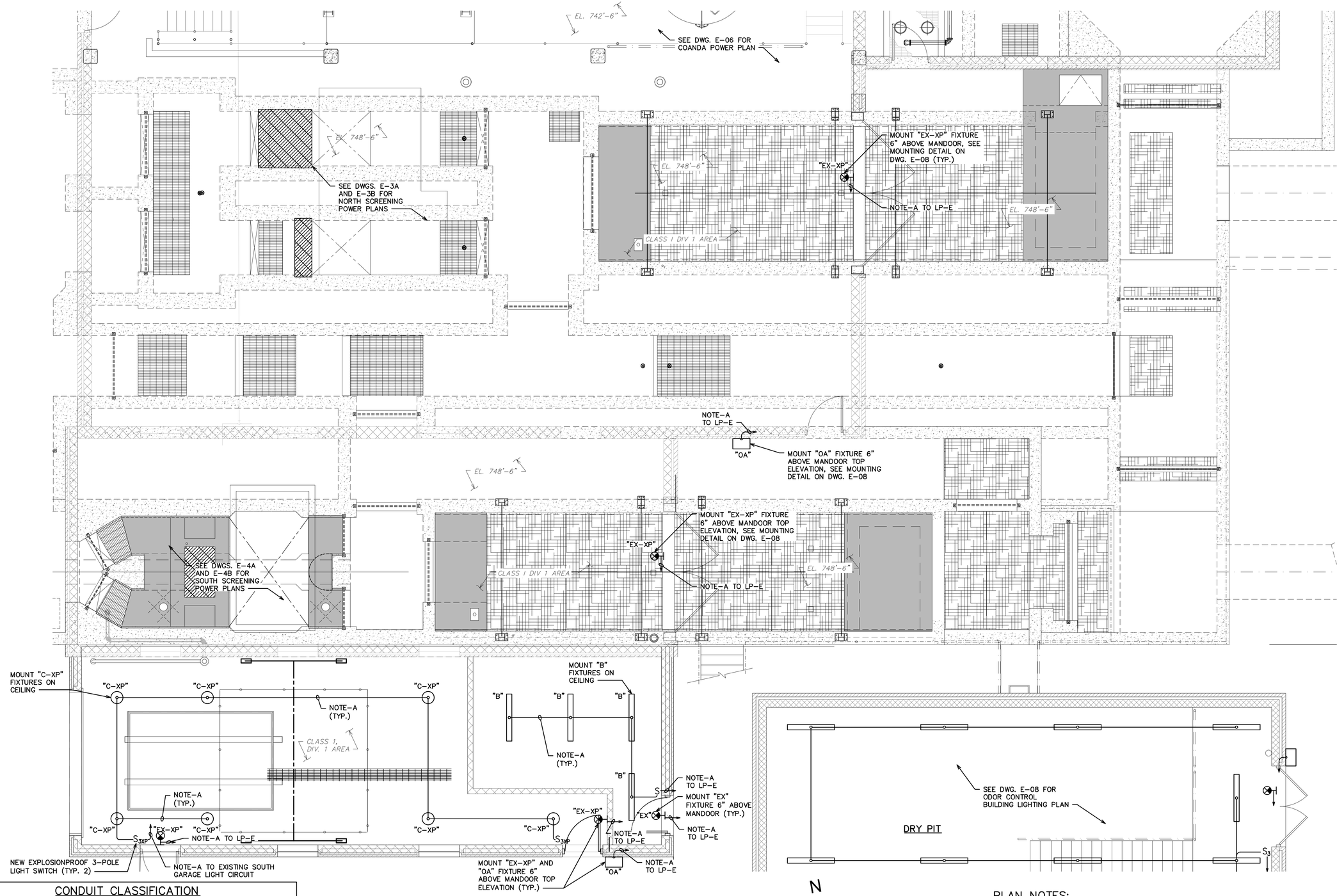

CONDUIT CLASSIFICATION

1. CONDUIT SHALL BE PVC COATED RIGID GALVANIZED STEEL FOR CLASS I DIV. I AREAS.
2. EXPOSED CONDUIT SHALL BE RIGID GALVANIZED STEEL FOR UNCLASSIFIED AREAS.
3. CONDUIT MAY BE LIQUIDTIGHT FLEXIBLE METAL CONDUIT FOR CONNECTIONS TO EQUIPMENT WITHIN 3' AND UP TO EQUIPMENT IN UNCLASSIFIED AREAS.
4. CONDUIT SHALL BE PVC SCHEDULE 40 WHERE RUN UNDERGROUND.
5. CONDUIT MAY BE EXPLOSIONPROOF FLEXIBLE CONDUIT WITHIN 3' AND UP TO EQUIPMENT IN CLASSIFIED AREAS. CONNECTIONS SHALL BE MADE WITH EXPLOSIONPROOF FLEXIBLE CONDUIT COUPLINGS.

BASIS OF DESIGN

THIS LIGHTING PLAN WAS DESIGNED USING AGI32 VERSION 19.15.2. LIGHTING LEVELS HAVE BEEN DETERMINED FROM IES RECOMMENDATIONS. LIGHTING LEVELS AT FINISHED FLOOR LEVEL FOR THE SOUTH GARAGE AND ELECTRICAL ROOM SHALL BE 30.0 FOOTCANDLES AVERAGE ±3.0 FOOTCANDLES. THIS LIGHTING PLAN IS BASED UPON THE SPECIFIED LIGHT FIXTURES ON DRAWING E-08. OTHER FIXTURES ARE ACCEPTABLE UPON SUBMITTAL OF A PHOTOMETRIC PLAN MATCHING THE LIGHTING LEVELS SPECIFIED ABOVE, MEETING SPECIFICATION REQUIREMENTS AS SHOWN ON DRAWING E-08, AND ENGINEER'S APPROVAL.

NORTH HEADWORKS BUILDING LIGHTING PLAN

ALL EQUIPMENT SHALL BE EXPLOSIONPROOF, RATED CLASS 1 DIVISION 1 ON THIS DRAWING, EXCEPT FOR IN THE ELECTRICAL ROOM AND EQUIPMENT MOUNTED OUTSIDE. INSTALL EQUIPMENT, WIRE, CONDUIT, AND SEAL-OFF FITTINGS PER NEC REQUIREMENTS FOR CLASSIFIED AREAS.

PLAN NOTES:

A. NEW 2-#12 + #12 GRD., 3/4"C.
B. NEW 3-#12 + #12 GRD., 1"C. (SHIELDED VFD CABLE)
C. NEW 2-#14, 3/4"C.
D. NEW 4-#14, 3/4"C.
E. NEW 1PR. #18 SHLD, 3/4"C.
F. NEW 11-#14, 3/4"C.
G. NEW CAT6 CABLE, 3/4"C.
H. NEW 3PR. #18 SHLD., 3/4"C.
I. NEW 13-#14, 3/4"C.
J. NEW 3-#8 + #10 GRD., 1 1/2"C. (SHIELDED VFD CABLE)

SCALE IN FEET (0 1 2 4 8)

FOR TRUE SCALE PLOT THIS SHEET TO 34" X 22" PAPER SIZE

Know what's below. Call before you dig. 811

REV.	DESCRIPTION	DATE	DRAWN	CHECKED
	ISSUED FOR BIDS SET	12-13-2021		
	90% DESIGN SUBMITTAL	11-22-2021		
	70% DESIGN SUBMITTAL	10-29-2021		
	50% DESIGN SUBMITTAL	10-01-2021		

CITY OF ANN ARBOR
PUBLIC SERVICES
301 EAST HURON STREET
P.O. BOX 8647
ANN ARBOR, MI 48107-8647
734-794-6430
www.a2gov.org

PROJECT MANAGEMENT - PUBLIC SERVICES - CITY OF ANN ARBOR

HEADWORKS IMPROVEMENTS PROJECT
NORTH HEADWORKS BUILDING
LIGHTING PLAN

SCALE 1/4" = 1'-0"
DRAWING No. 722
SHEET No. E-10

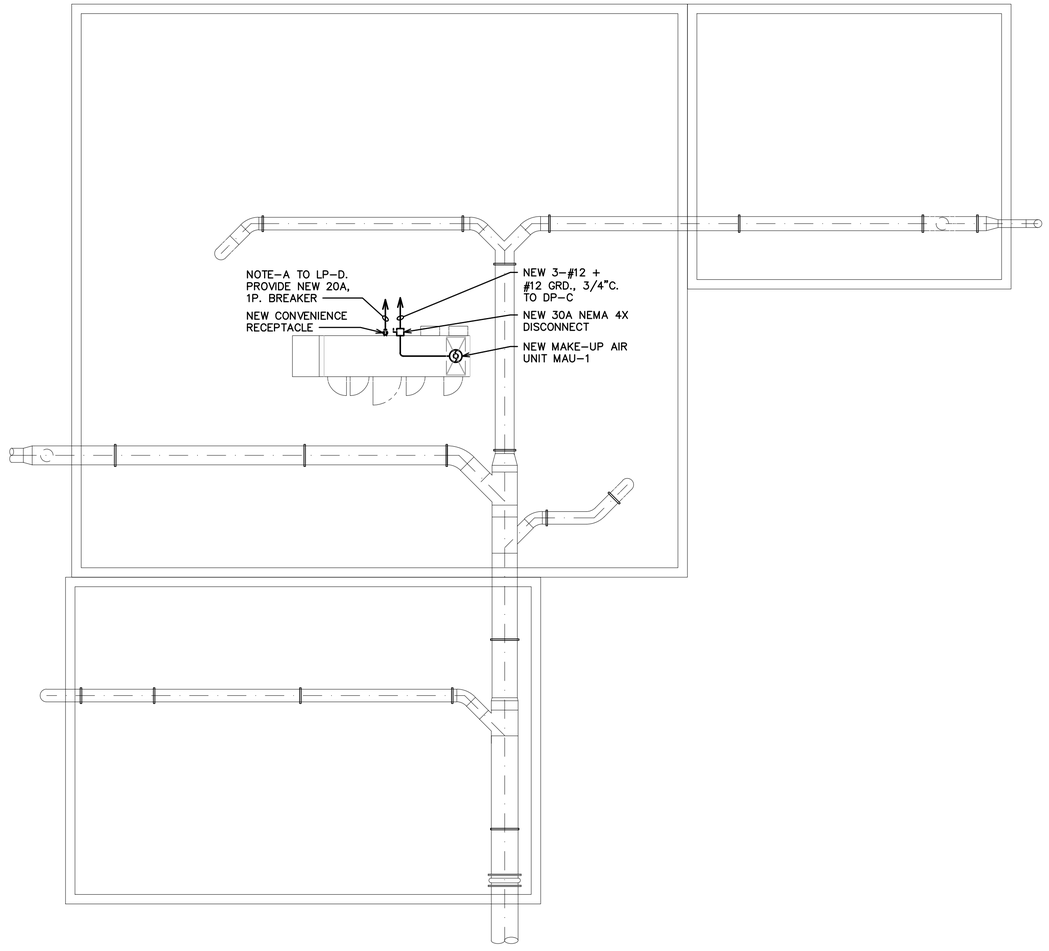

HEADWORKS BUILDING
ROOF POWER PLAN

CONDUIT CLASSIFICATION

1. CONDUIT SHALL BE PVC COATED RIGID GALVANIZED STEEL FOR CLASS I DIV. I AREAS.
2. EXPOSED CONDUIT SHALL BE RIGID GALVANIZED STEEL FOR UNCLASSIFIED AREAS.
3. CONDUIT MAY BE LIQUIDTIGHT FLEXIBLE METAL CONDUIT FOR CONNECTIONS TO EQUIPMENT WITHIN 3' AND UP TO EQUIPMENT IN UNCLASSIFIED AREAS.
4. CONDUIT SHALL BE PVC SCHEDULE 40 WHERE RUN UNDERGROUND.
5. CONDUIT MAY BE EXPLOSIONPROOF FLEXIBLE CONDUIT WITHIN 3' AND UP TO EQUIPMENT IN CLASSIFIED AREAS. CONNECTIONS SHALL BE MADE WITH EXPLOSIONPROOF FLEXIBLE CONDUIT COUPLINGS.

PLAN NOTES:

A. NEW 2–#12 + #12 GRD., 3/4"C.
B. NEW 3–#12 + #12 GRD., 1"C. (SHIELDED VFD CABLE)
C. NEW 2–#14, 3/4"C.
D. NEW 4–#14, 3/4"C.
E. NEW 1PR. #18 SHLD, 3/4"C.
F. NEW 11–#14, 3/4"C.
G. NEW CAT6 CABLE, 3/4"C.
H. NEW 3PR. #18 SHLD., 3/4"C.
I. NEW 13–#14, 3/4"C.
J. NEW 3–#8 + #10 GRD., 1 1/2"C. (SHIELDED VFD CABLE)

0 2 4 8 16
SCALE IN FEET

FOR TRUE SCALE PLOT THIS SHEET TO 34" X 22" PAPER SIZE

811 Know what's below. Call before you dig.

REV.	DESCRIPTION	DATE	DRAWN	CHECKED
	50% DESIGN SUBMITTAL	10–01–2021		
	70% DESIGN SUBMITTAL	10–29–2021		
	90% DESIGN SUBMITTAL	11–22–2021		
	ISSUED FOR BIDS SET	12–13–2021		

CITY OF ANN ARBOR
PUBLIC SERVICES
301 EAST HURON STREET
P.O. BOX 8647
ANN ARBOR, MI 48107-8647
734.794-6410
www.a2gov.org

PROJECT MANAGEMENT - PUBLIC SERVICES - CITY OF ANN ARBOR

HEADWORKS IMPROVEMENTS PROJECT
HEADWORKS BUILDING ROOF
POWER PLAN

SCALE 1/8" = 1'-0"
DRAWING No. 724

SHEET No.
E–11

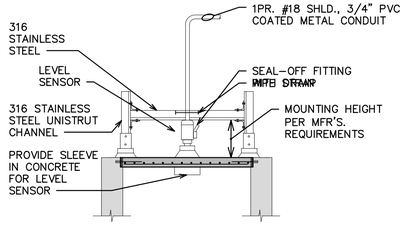

TYPICAL LEVEL SENSOR ABOVE CONCRETE MOUNTING DETAIL

N.T.S.

1. ALL MOUNTING HARDWARE SHALL BE 316 STAINLESS STEEL.
2. INSTALL SENSORS PER MANUFACTURER'S REQUIREMENT.

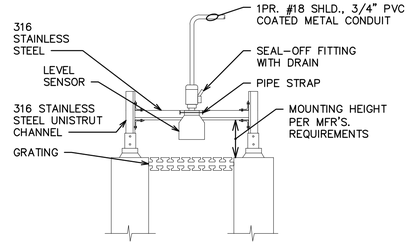

TYPICAL LEVEL SENSOR ABOVE GRATING MOUNTING DETAIL

N.T.S.

1. ALL MOUNTING HARDWARE SHALL BE 316 STAINLESS STEEL.
2. INSTALL SENSORS PER MANUFACTURER'S REQUIREMENT.

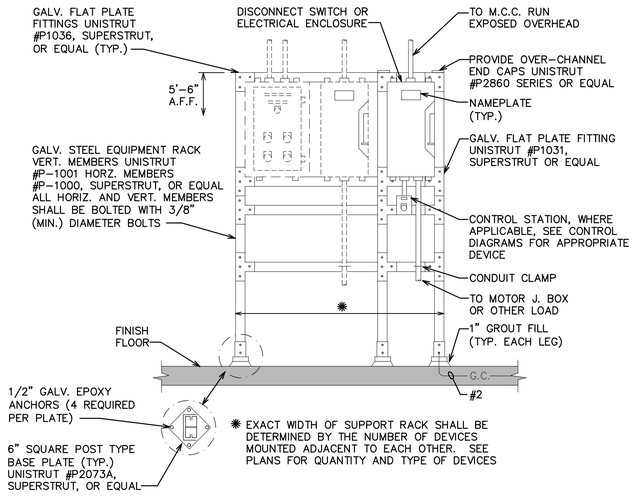

TYPICAL EQUIPMENT SUPPORT RACK ON CONCRETE SLAB DETAIL

N.T.S.

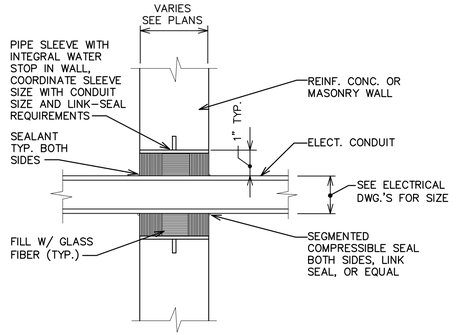

TYPICAL CONDUIT PENETRATION THRU NEW WALL ABOVE & BELOW GRADE

N.T.S.

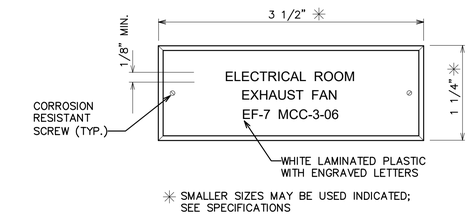

✳ SMALLER SIZES MAY BE USED INDICATED; SEE SPECIFICATIONS

NAMEPLATE DETAIL

FULL SCALE

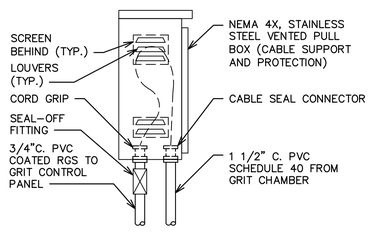

VENTED PULL BOX DETAIL

N.T.S.

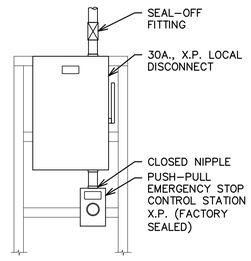

LOCAL DISCONNECT INSTALLATION DETAIL "A"

N.T.S.

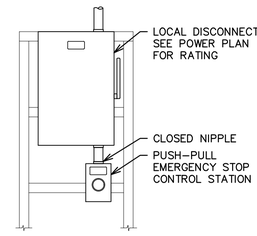

LOCAL DISCONNECT INSTALLATION DETAIL "B"

N.T.S.

811 Know what's below. Call before you dig.

REV.	DESCRIPTION	DATE	DRAWN	CHECKED
	ISSUED FOR BIDS SET	12-13-2021		
	90% DESIGN SUBMITTAL	11-22-2021		
	70% DESIGN SUBMITTAL	10-29-2021		
	50% DESIGN SUBMITTAL	10-01-2021		

CITY OF ANN ARBOR
PUBLIC SERVICES
301 EAST HURON STREET
P.O. BOX 8647
ANN ARBOR, MI 48107-8647
734.794.6410
www.a2gov.org

PROJECT MANAGEMENT - PUBLIC SERVICES - CITY OF ANN ARBOR

HEADWORKS IMPROVEMENTS PROJECT

ELECTRICAL DETAILS

SCALE N.T.S.

DRAWING No. 726

SHEET No. E-12

INSTRUMENT AND FUNCTION SYMBOLS

LOCATION AND ACCESSIBILITY	SHARED DISPLAY/ SHARED CONTROL: PRIMARY CHOICE OR BASIC PROCESS CONTROL SYSTEM	SHARED DISPLAY/ SHARED CONTROL: ALTERNATE CHOICE OR SAFETY INSTRUMENT. SYSTEM	COMPUTER SYSTEMS AND SOFTWARE	DISCRETE
– LOCATED IN FIELD – NOT PANEL, CABINET, OR CONSOLE MOUNTED – VISIBLE AT FIELD LOCATION – NORMALLY OPERATOR ACCESSIBLE	ABCD 12345	ABCD 12345	ABCD 12345	ABCD 12345
– LOCATED IN OR ON FRONT OF CENTRAL OR MAIN PANEL OR CONSOLE – VISIBLE ON FRONT OF PANEL OR ON VIDEO DISPLAY – NORMALLY OPERATOR ACCESSIBLE AT PANEL FRONT OR CONSOLE	ABCD 12345	ABCD 12345	ABCD 12345	ABCD 12345
– LOCATED IN REAR OF CENTRAL OR MAIN PANEL – LOCATED IN CABINET BEHIND PANEL – NOT VISIBLE ON FRONT OF PANEL OR ON VIDEO DISPLAY – NOT NORMALLY OPERATOR ACCESSIBLE AT PANEL OR CONSOLE	ABCD 12345	ABCD 12345	ABCD 12345	ABCD 12345
– LOCATED IN OR ON FRONT OF SECONDARY OR LOCAL PANEL OR CONSOLE – VISIBLE ON FRONT OF PANEL OR ON VIDEO DISPLAY – NORMALLY OPERATOR ACCESSIBLE AT PANEL FRONT OR CONSOLE	ABCD 12345	ABCD 12345	ABCD 12345	ABCD 12345
– LOCATED IN REAR OF SECONDARY OR LOCAL PANEL – LOCATED IN FIELD CABINET – NOT NORMALLY OPERATOR ACCESSIBLE AT PANEL OR CONSOLE	ABCD 12345	ABCD 12345	ABCD 12345	ABCD 12345

X — SUFFIX (X) TO DIFFERENTIATE BETWEEN INSTRUMENTS AND FUNCTIONS THAT WOULD OTHERWISE HAVE THE SAME IDENTIFICATION.

SINGLE INSTRUMENT OR OTHER COMPONENT HAVING MULTIPLE FUNCTIONS OR SHARING A COMMON HOUSING

(ZZZ) — DESIGNATIONS OF CONTROL FUNCTIONS (ZZZ) ASSOCIATED WITH INSTRUMENT OR OTHER COMPONENTS.

AHC – AUTO/HOLD/CLOSE
AM – AUTO/MANUAL
CALC– CALCULATION
DEV – DEVIATION
MOA – MANUAL/OFF/AUTO
HOR – HAND/OFF/REMOTE
LOS – LOCKOUT STOP

LR – LOCAL/REMOTE
LSR – LOCAL/STOP/REMOTE
00 – ON / OFF
OC – OPEN/CLOSE
OSC – OPEN/STOP/CLOSED
POT – POTENTIOMETER
RL – RAISE/LOWER

RS – RUN/STOP
RSL – RAISE/STOP/LOWER
SD – SHUTDOWN
SEL – SELECT
SP – SET POINT
SR – START/RESET
SS – STOP/START

ABCD 12345 ^ — CONTROL SYSTEM COMPUTING FUNCTION

ABCD 12345 ^ — INSTRUMENT WITH COMPUTING OR CONVERTING FUNCTION

CONVERT

E – VOLTAGE
I – CURRENT
P – PNEUMATIC
A – ANALOG
B – BINARY

H – HYDRAULIC
O – ELECTROMAGNETIC, SONIC
R – RESISTANCE (ELECT.)
D – DIGITAL

COMPUTE ^

Σ SUMMING
— SUBTRACTOR
X MULTIPLYING
÷ DIVIDING
n√ ROOT EXTRACTION

P PROPORTIONAL
R DERIVATIVE
Σ/n AVERAGING
I:I RATIO
PID PID

△ DIFFERENCE
> HIGH SELECTING
< LOW SELECTING
INTEGRAL
COMPLEX FUNCTION

= 1, 2, 3, etc.
REFER TO NOTE ON SAME SHEET FOR BRIEF DESCRIPTION

ABCD 1234 — PILOT LIGHT

* — ELECTRICAL CONTROL INTERLOCK

— COMPLEX INTERLOCK
= 1, 2, 3, etc.
REFER TO NOTE ON SAME SHEET FOR BRIEF DESCRIPTION

AND — AND LOGIC

OR — OR LOGIC

VALVE, GATE, AND ACTUATOR SYMBOLS

- GATE VALVE
- PLUG VALVE
- GLOBE VALVE
- BALL VALVE (V INDICATES VENTED TYPE)
- BUTTERFLY VALVE
- CHECK VALVE
- 3–WAY VALVE
- 3–WAY BALL VALVE
- DIAPHRAGM VALVE
- PINCH VALVE
- NEEDLE VALVE
- SLUICE GATE
- STOP/SLIDE GATE
- S SOLENOID ACTUATOR
- P PNEUMATIC ACTUATOR
- BACKFLOW PREVENTER
- PRESSURE RELIEF VALVE
- VACUUM RELIEF VALVE
- COMBINATION VACUUM AND PRESSURE RELIEF VALVE
- PRESSURE–REDUCING REGULATOR
- BACKPRESSURE REGULATOR
- V AIR RELEASE VALVE
- M ROTARY MOTOR
- E H ELECTROHYDRAULIC ACTUATOR
- MANUAL ACTUATOR

PUMP AND EQUIPMENT SYMBOLS

- CENTRIFUGAL WET PIT PUMP (OR DRY–PIT SUBMERSIBLE)
- BLOWER (CENTRIFUGAL)
- GEAR PUMP OR BLOWER (POSITIVE DISPLACEMENT)
- SCREW PUMP
- PISTON PUMP
- DIAPHRAGM PUMP
- ROTARY LOBE PUMP OR BLOWER (POSITIVE DISPLACEMENT)
- METERING PUMP
- COMPRESSOR
- PROGRESSIVE CAVITY PUMP
- VERTICAL PUMP
- INLINE GRINDER
- CENTRIFUGAL PUMP
- PERISTALTIC METERING PUMP
- M MIXER

MISCELLANEOUS SYMBOLS

- QUICK CONNECT
- BLIND FLANGE
- FLEXIBLE HOSE
- CALIBRATION CYLINDER
- PULSATION DAMPENER
- EXPANSION TANK
- HORN
- HORN/STROBE
- RUPTURE DISK
- V VENT
- DIAPHRAGM SEAL
- FULL LINE RING SEAL
- D DRAIN
- STRAINER
- M MOTOR
- FILTER
- AIR FILTER
- STATIC MIXER
- INJECTOR

PRIMARY ELEMENT SYMBOLS

- M MAGNETIC FLOW METER
- SONIC FLOW METER
- ΔT THERMAL MASS FLOW METER
- AVERAGING PITOT TUBE
- TURBINE OR PROPELLER FLOW METER
- VENTURI FLOW METER
- VORTEX FLOW METER
- POSITIVE DISPLACEMENT FLOW METER
- PARSHALL FLUME
- WEIR
- ORIFICE PLATE
- PADDLE WHEEL FLOW METER
- FICV ROTAMETER WITH INTEGRAL VALVE
- ABCD 1234 TT — TT: RF=ADMITTANCE/CAPACITANCE MAN=MANOMETER
- ULTRASONIC LEVEL SENSOR
- FLOAT LEVEL SWITCH
- SUBMERSIBLE LEVEL SENSOR
- NON–CONTACT RADAR LEVEL SENSOR
- GUIDED WAVE RADAR LEVEL SENSOR
- CAPACITANCE LEVEL SENSOR

AXX 12345 (ZZZ) — ANALYSIS INSTRUMENT

ZZZZ
ALK – ALKALINITY
CL2 – CHLORINE CONCENTRATION
CON – CONDUCTIVITY
DO – DISSOLVED OXYGEN
H2S – HYDROGEN SULFIDE
IR – INFRARED
KVM – KEYBOARD, VIDEO MONITOR, MOUSE
LEL – LOWER EXPLOSIVE LIMIT
MEOH – METHANOL VAPOR
O2 – OXYGEN CONCENTRATION
O3 – OZONE
ORP – OXIDATION/REDUCTION POTENTIAL
PAC – POWDERED CARBON
PH – HYDROGEN ION CONCENTRATION
SO2 – SULFUR DIOXIDE
TH – TOTAL HARDNESS
TURB – TURBIDITY
UV – ULTRAVIOLET

GENERAL NOTES

1. SYMBOLS AND NOMENCLATURE ARE BASED ON ANSI/ISA–5.1–2009.
2. REFER TO LEGEND SHEETS OF OTHER DISCIPLINES FOR ADDITIONAL SYMBOLS AND ABBREVIATIONS.
3. REFER TO SPECIFICATIONS FOR ADDITIONAL DETAIL ON CONTROL SYSTEM FUNCTIONAL REQUIREMENTS.
4. INSTRUMENTS AND PANELS DENOTED WITH AN ASTERISK (*) ARE PROVIDED BY OTHER DISCIPLINES UNDER THIS CONTRACT. REFER TO THE DRAWINGS AND SPECIFICATIONS FOR ADDITIONAL DETAILS.
5. POWER SUPPLIES FOR LOOPS OR SYSTEMS SHALL BE FURNISHED BY THE INSTRUMENTATION SUPPLIER TO MEET THE PARTICULAR CHARACTERISTICS (E.G., VOLTAGE AND CURRENT REQUIREMENTS) OF COMPONENTS IN EACH LOOP OR SYSTEM.

I/O TYPES

- ▽ △ DISCRETE ELECTRICAL SIGNALS
- ▽ △ DISCRETE DIGITAL SIGNALS
- ▼ ▲ ANALOG ELECTRICAL SIGNALS
- ▼ ▲ ANALOG DIGITAL SIGNALS

OPTIONAL SIGNAL MODIFIER:
24 – PROVIDE 24VDC LOOP POWER SUPPLY
3W – THREE WIRE (24VDC) DEVICE
DN – VIA DEVICENET
EN – VIA ETHERNET
FS – WIRE FAIL SAFE
IS – PROVIDE INTRINSICALLY SAFE BARRIER/RELAY
PB – VIA PROFIBUS

NOTE: I/O "TRIANGLES" DO NOT NECESSARILY CORRESPOND TO PLC I/O. SEE I/O SCHEDULE FOR ACTUAL PLC I/O.

GENERAL ABBREVIATIONS

ES – ELECTRIC SUPPLY
CMP – WASHER COMPACTOR
HMI – HUMAN MACHINE INTERFACE
GC – GRIT COLLECTOR
GW – GRIT WASHER
FM – FORCE MAIN
GR – GRIT
GRD – GRIT DRAIN
ICSS – INSTRUMENTATION AND CONTROL SUBCONTRACTOR
LCS – LOCAL CONTROL STATION
MOV – MOTOR OPERATED VALVE
OIT – OPERATOR INTERFACE TERMINAL
PEW – PLANT EFFLUENT WATER
SCN – SCREEN
SG – SCREEN AND GRIT
SV – SOLENOID VALVE

LINE SYMBOLS AND LEGEND

- PROCESS/SIGNALS NOT CONNECTED (CROSSING)
- PROCESS/SIGNALS CONNECTED
- MAJOR PROCESS PIPES OR CHANNELS
- SECONDARY PROCESS OR MECHANICAL CONNECTION
- AIR SUPPLY OR SIGNAL
- ELECTRICAL SIGNAL
- DATA LINK OR INTERNAL SOFTWARE LINK
- FIBER OPTIC
- C6 CAT6
- FUTURE
- DWG NO / DWG NO — TIE–IN CONTINUED ELSEWHERE AS INDICATED
- CONNECTION OUT OF SCOPE
- TTT–NNN EQUIPMENT TAG

IDENTIFICATION LETTERS

	FIRST LETTERS: MEASURED OR INITIATING VARIABLE	FIRST LETTERS: VARIABLE MODIFIER	SUCCEEDING LETTERS: READOUT/ PASSIVE FUNCTION	SUCCEEDING LETTERS: OUTPUT/ ACTIVE FUNCTION	SUCCEEDING LETTERS: FUNCTION MODIFIER
A	ANALYSIS		ALARM		
B	BURNER, COMBUSTION		USER'S CHOICE	USER'S CHOICE	USER'S CHOICE
C	CONDUCTIVITY			CONTROL	CLOSE
D	DENSITY (MASS) OR SPECIFIC GRAVITY	DIFFERENCE, DIFFERENTIAL			DEVIATION
E	VOLTAGE (EMF)		SENSOR, PRIMARY ELEMENT		
F	FLOW, FLOW RATE	RATIO			
G	USER'S CHOICE		GLASS, GAUGE, VIEWING DEVICE		
H	HAND				HIGH
I	CURRENT		INDICATE		
J	POWER		SCAN		
K	TIME, SCHEDULE	TIME RATE OF CHANGE		CONTROL STATION	
L	LEVEL		LIGHT		LOW
M	MOISTURE OR HUMIDITY	MOMENTARY			MIDDLE, INTERMEDIATE
N	TORQUE		USER'S CHOICE	USER'S CHOICE	USER'S CHOICE
O	USER'S CHOICE		ORIFICE, RESTRICTION		OPEN
P	PRESSURE		POINT (TEST CONNECTION)		
Q	QUANTITY	INTEGRATE, TOTALIZE	INTEGRATE, TOTALIZE		
R	RADIATION		RECORD		RUN
S	SPEED, FREQUENCY	SAFETY		SWITCH	STOP
T	TEMPERATURE			TRANSMIT	
U	MULTIVARIABLE		MULTIFUNCTION	MULTIFUNCTION	
V	VIBRATION, MECHANICAL ANALYSIS			VALVE, DAMPER, LOUVER	
W	WEIGHT, FORCE		WELL PROBE		
X	UNCLASSIFIED	X-AXIS	ACCESSORY DEVICES, UNCLASS.	UNCLASSIFIED	UNCLASSIFIED
Y	EVENT, STATE, PRESENCE	Y-AXIS		AUXILIARY DEVICES	
Z	POSITION, DIMENSION	Z-AXIS, SAFETY INSTRUMENTED SYSTEM		DRIVER, ACTUATOR, UNCLASSIFIED FINAL CONTROL ELEMENT	

811 Know what's below. Call before you dig.

REV.	DESCRIPTION	DATE	DRAWN	CHECKED
	ISSUED FOR BIDS SET	12–13–2021		
	90% DESIGN SUBMITTAL	11–22–2021		
	70% DESIGN SUBMITTAL	10–29–2021		
	50% DESIGN SUBMITTAL	10–01–2021		

CITY OF ANN ARBOR
PUBLIC SERVICES
301 EAST HURON STREET
P.O. BOX 8647
ANN ARBOR, MI 48107-8647
734-794-6410
www.a2gov.org

PROJECT MANAGEMENT - PUBLIC SERVICES - CITY OF ANN ARBOR

HEADWORKS IMPROVEMENTS PROJECT

INSTRUMENTATION AND CONTROL LEGEND AND ABBREVIATIONS

SCALE NTS

DRAWING No. 800

SHEET No. I–01

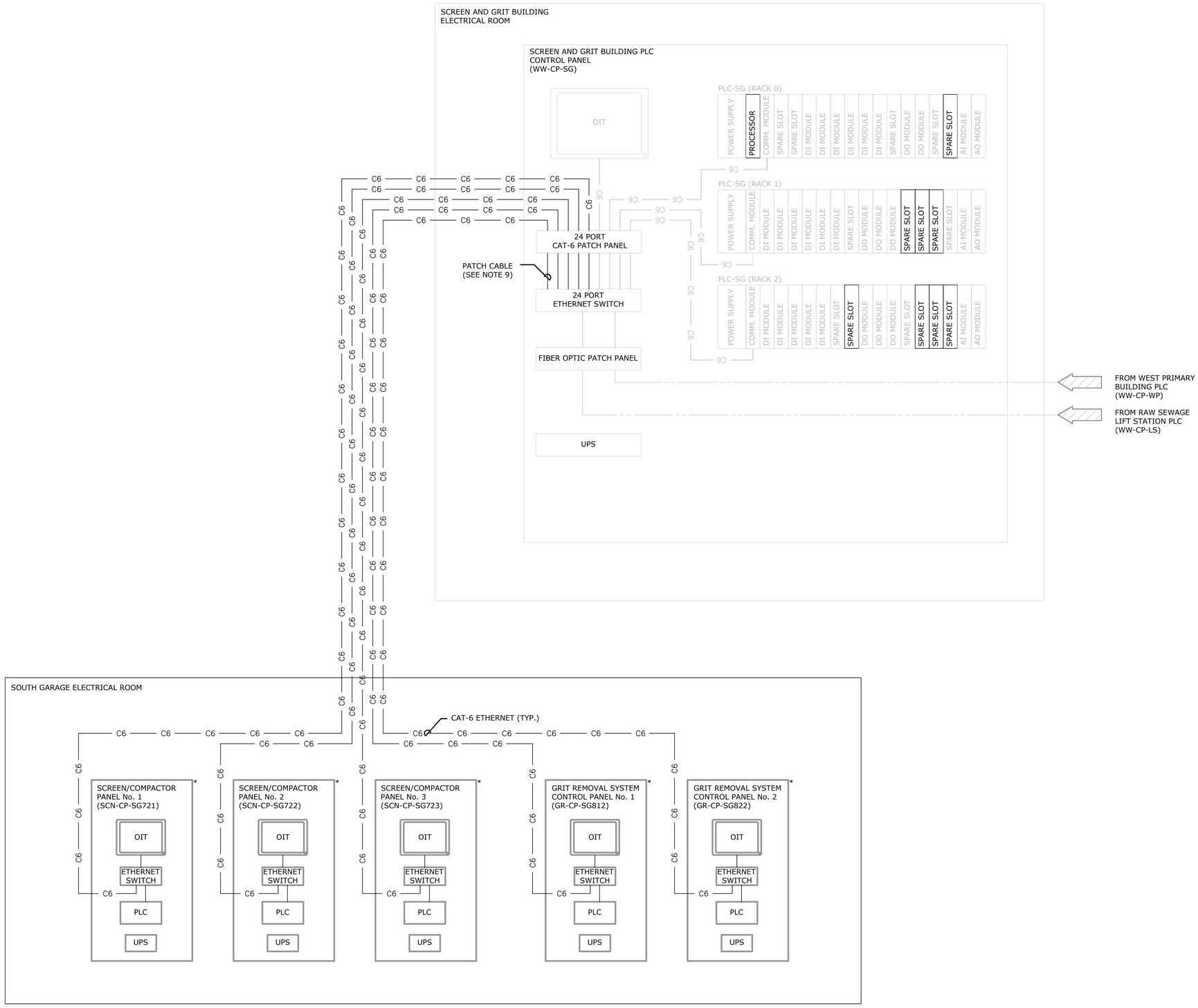

GENERAL NOTES:

1. THE CITY OF ANN ARBOR WASTEWATER TREATMENT PLANT HAS AN EXISTING CENTRAL SCADA SYSTEM LOCATED IN THE ADMINISTRATION BUILDING CONTROL ROOM.
2. UNDER THE HEADWORKS IMPROVEMENT PROJECT, THE EXISTING PLC PROCESSOR IN THE PLC-SG PANEL WILL BE UPGRADED TO INCLUDE MONITORING AND CONTROL OF ALL EQUIPMENT PROVIDED UNDER THIS CONTRACT.
3. EXISTING HMI IS FACTORY TALK VIEW SE VERSION 12, AND PLANT PAX VERSION 3.0.
4. EXISTING PLC-SG IS A CONTROLLOGIX PLC SYSTEM COMPLETE WITH THREE 17 SLOT CHASSIS, A 1756-L71 PROCESSOR, ETHERNET COMMUNICATION MODULES AND SEVERAL I/O CARDS USED FOR PROCESS CONTROL. IN ADDITION THERE ARE 13 SPARE SLOTS.
5. EXISTING 1756-L71 PROCESSOR SHALL BE REPLACED WITH A 1756-L73 PROCESSOR WITH 8 MB MEMORY. IN ADDITION THE FOLLOWING I/O MODULES SHALL BE PROVIDED:

THREE	AI	- 1756-IF6I
ONE	AO	- 1756-OF6CI
THREE	DI	- 1756-IA16I
ONE	DO	- 1756-OW16I

   THESE EIGHT NEW MODULES SHALL BE INSTALLED IN EXISTING SPARE SLOTS IN EXISTING CHASSIS. PROPOSED SPARE SLOTS ARE SHOWN, IT IS AT THE DISCRETION OF THE ICSS FINAL LOCATION OF THE NEW MODULES.
6. HEADWORKS IMPROVEMENT PROJECT INCLUDES ALL THE INSTRUMENTATION AND CONTROLS FOR THE SCREENS AND WASHER COMPACTOR SYSTEM, GRIT COLLECTION SYSTEM, ODOR CONTROL SYSTEM, GAS MONITORING SYSTEM FOR THE ODOR CONTROL BUILDING, AND SUMP PUMPS.
7. THE INSTRUMENTATION AND CONTROL SYSTEM SUBCONTRACTOR (ICSS) SHALL UPGRADE THE EXISTING PLC-SG TO INTEGRATE ALL NEW EQUIPMENT PROVIDED UNDER THIS CONTRACT.
8. THE ICSS SHALL MODIFY EXISTING SCADA SYSTEM TO ADD MONITORING AND CONTROL OF THE NEW SCREEN SYSTEM, GRIT REMOVAL SYSTEM, ODOR CONTROL SYSTEM, GAS MONITORING SYSTEM, AND SUMP PUMPS. THIS SHALL INCLUDE, BUT NOT LIMITED TO, NEW GRAPHIC SCADA SCREENS, MODIFICATIONS TO EXISTING SCADA SCREENS, REPORTS, AND TRENDS.
9. PROVIDE ALL NECESSARY PATCH CABLES.
10. DETAILS ON EXISTING PANEL COMPONENTS AND WIRING IS OMITTED FOR CLARITY.
11. INSTRUMENTS AND PANELS DENOTED WITH AN ASTERISK (*) ARE PROVIDED BY OTHER DISCIPLINES UNDER THIS CONTRACT.

811 Know what's below. Call before you dig.

REV.	DESCRIPTION	DATE	DRAWN	CHECKED
	ISSUED FOR BIDS SET	12-13-2021		
	90% DESIGN SUBMITTAL	11-22-2021		
	70% DESIGN SUBMITTAL	10-29-2021		
	50% DESIGN SUBMITTAL	10-01-2021		

CITY OF ANN ARBOR
PUBLIC SERVICES
301 EAST HURON STREET
P.O. BOX 8647
ANN ARBOR, MI 48107-8647
734-794-6410
www.a2gov.org

PROJECT MANAGEMENT - PUBLIC SERVICES - CITY OF ANN ARBOR

HEADWORKS IMPROVEMENTS PROJECT

INSTRUMENTATION AND CONTROL
CONTROL SYSTEM ARCHITECTURE

SCALE: NTS

DRAWING No.: 802

SHEET No.: I-02

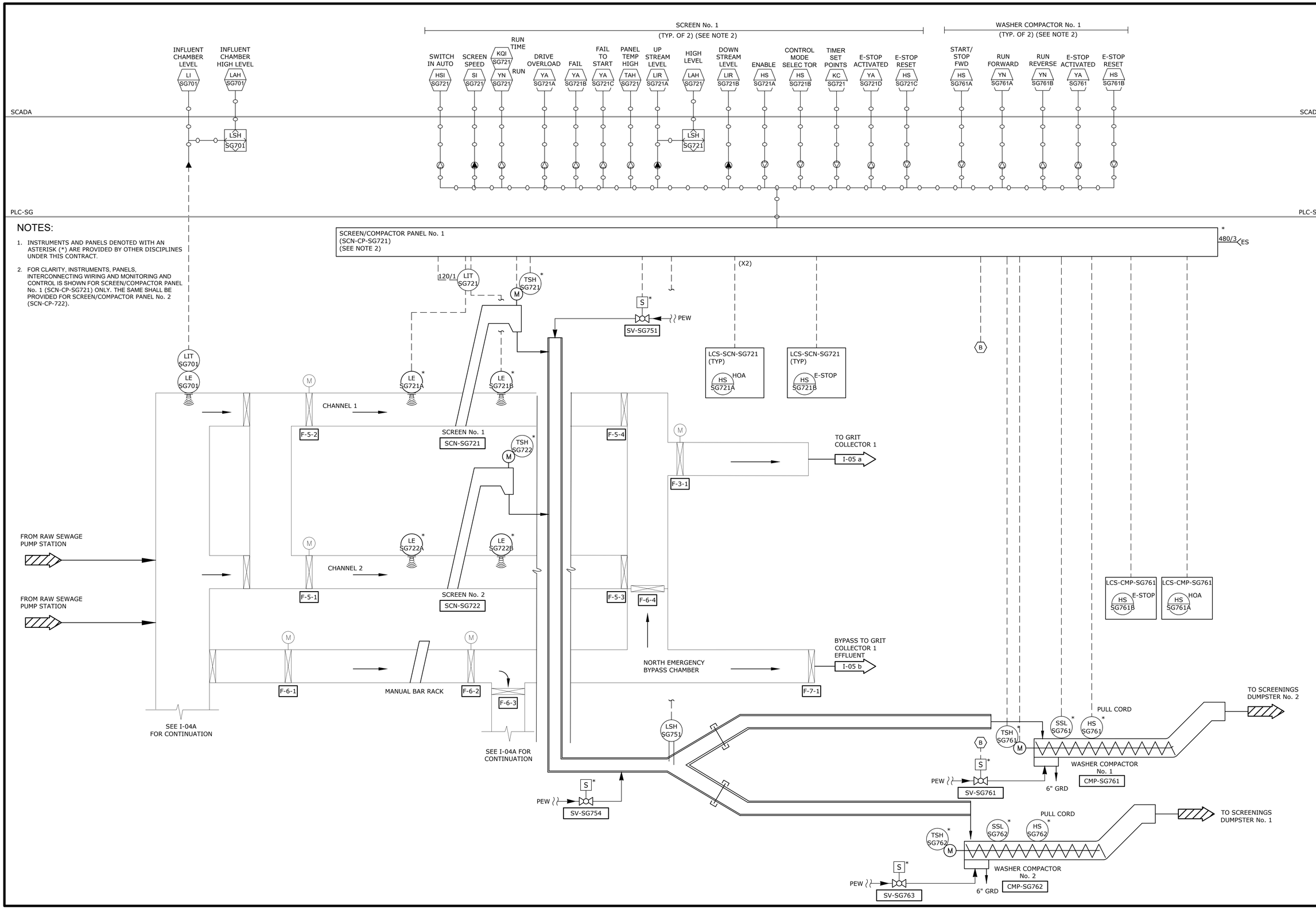

NOTES:

1. INSTRUMENTS AND PANELS DENOTED WITH AN ASTERISK (*) ARE PROVIDED BY OTHER DISCIPLINES UNDER THIS CONTRACT.
2. FOR CLARITY, INSTRUMENTS, PANELS, INTERCONNECTING WIRING AND MONITORING AND CONTROL IS SHOWN FOR SCREEN/COMPACTOR PANEL No. 1 (SCN-CP-SG721) ONLY. THE SAME SHALL BE PROVIDED FOR SCREEN/COMPACTOR PANEL No. 2 (SCN-CP-722).

811 Know what's below. Call before you dig.

REV.	DESCRIPTION	DATE	DRAWN	CHECKED
	ISSUED FOR BIDS SET	12-13-2021		
	90% DESIGN SUBMITTAL	11-22-2021		
	70% DESIGN SUBMITTAL	10-29-2021		
	50% DESIGN SUBMITTAL	10-01-2021		

CITY OF ANN ARBOR
PUBLIC SERVICES
301 EAST HURON STREET
P.O. BOX 8647
ANN ARBOR, MI 48107-8647
734-794-6410
www.a2gov.org

PROJECT MANAGEMENT - PUBLIC SERVICES - CITY OF ANN ARBOR

HEADWORKS IMPROVEMENTS PROJECT

INSTRUMENTATION AND CONTROL
NORTH SCREENINGS – OPTION A
PROCESS AND INSTRUMENTATION DIAGRAM

SCALE NTS

DRAWING No. 804

SHEET No. I-03A

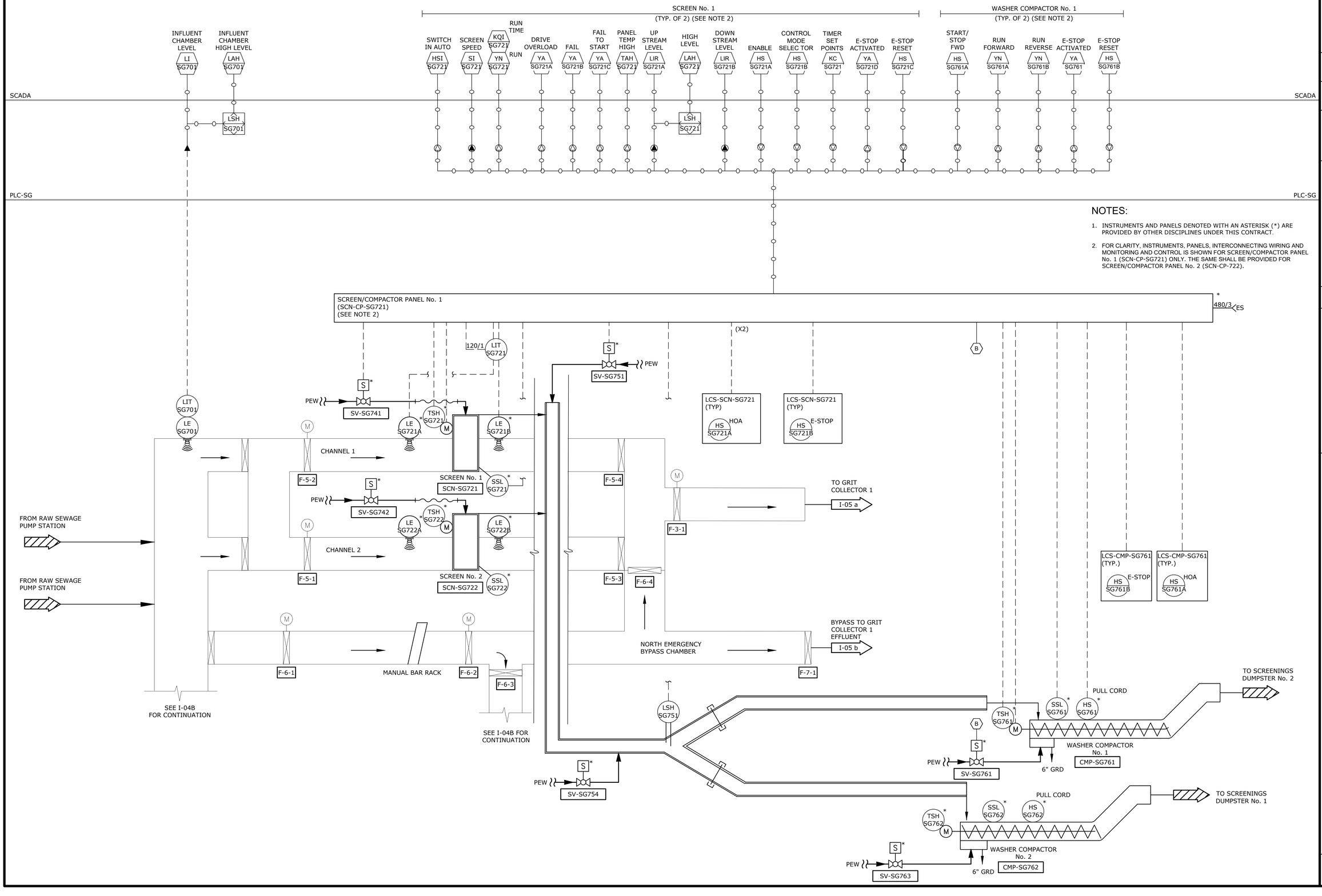

811 Know what's below. Call before you dig.

REV.	DESCRIPTION	DATE	DRAWN	CHECKED
	ISSUED FOR BIDS SET	12-13-2021		
	90% DESIGN SUBMITTAL	11-22-2021		
	70% DESIGN SUBMITTAL	10-29-2021		
	50% DESIGN SUBMITTAL	10-01-2021		

CITY OF ANN ARBOR
PUBLIC SERVICES
301 EAST HURON STREET
P.O. BOX 8647
ANN ARBOR, MI 48107-8647
734-794-6410
www.a2gov.org

PROJECT MANAGEMENT - PUBLIC SERVICES - CITY OF ANN ARBOR

HEADWORKS IMPROVEMENTS PROJECT

INSTRUMENTATION AND CONTROL
NORTH SCREENINGS – OPTION B
PROCESS AND INSTRUMENTATION DIAGRAM

SCALE NTS

DRAWING No. 805

SHEET No.
I-03B

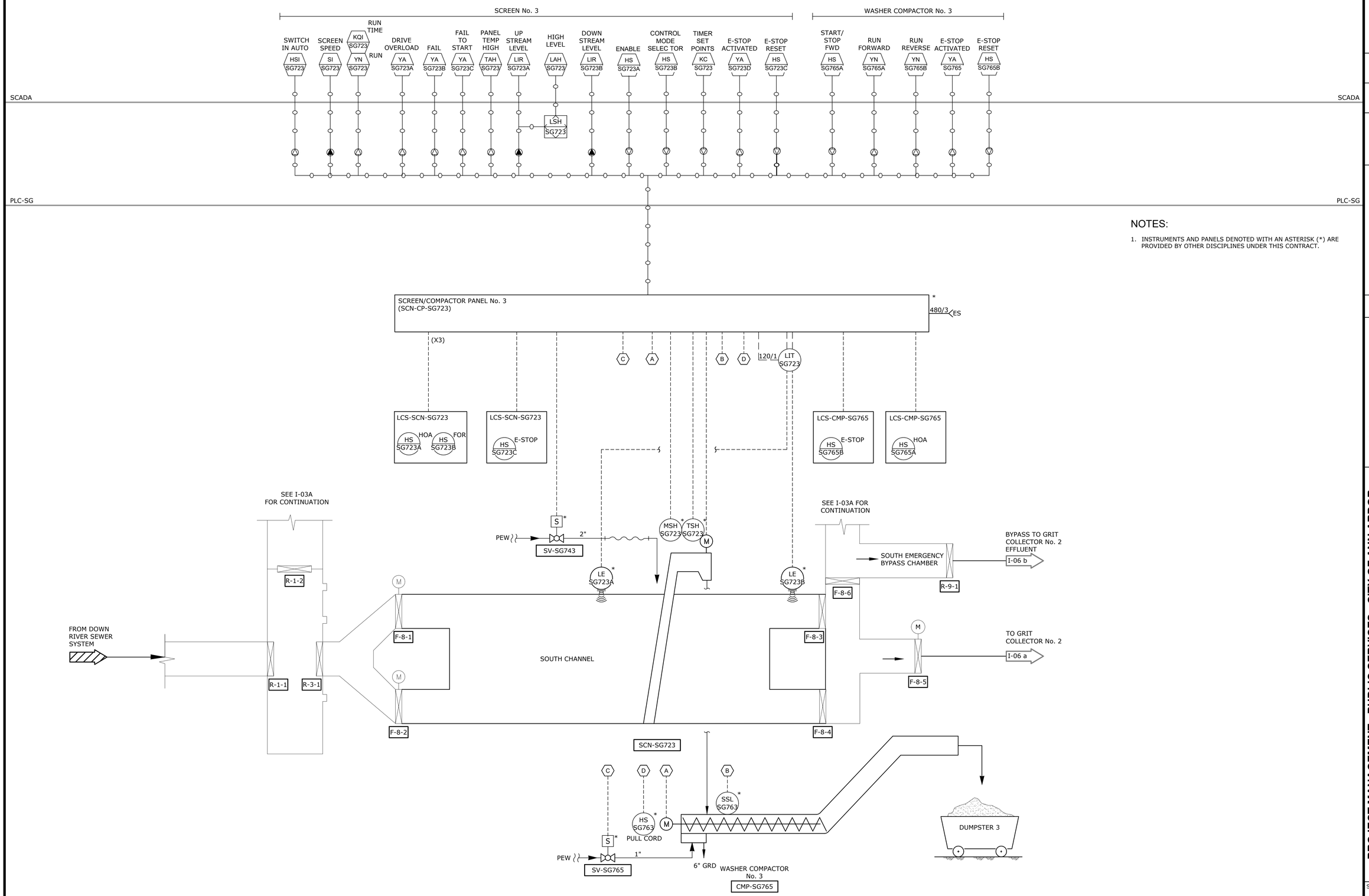

NOTES:

1. INSTRUMENTS AND PANELS DENOTED WITH AN ASTERISK (*) ARE PROVIDED BY OTHER DISCIPLINES UNDER THIS CONTRACT.

811 Know what's below. Call before you dig.

REV.	DESCRIPTION	DATE	DRAWN	CHECKED
	ISSUED FOR BIDS SET	12-13-2021		
	90% DESIGN SUBMITTAL	11-22-2021		
	70% DESIGN SUBMITTAL	10-29-2021		
	50% DESIGN SUBMITTAL	10-01-2021		

CITY OF ANN ARBOR
PUBLIC SERVICES
301 EAST HURON STREET
P.O. BOX 8647
ANN ARBOR, MI 48107-8647
734-794-6410
www.a2gov.org

PROJECT MANAGEMENT - PUBLIC SERVICES - CITY OF ANN ARBOR

HEADWORKS IMPROVEMENTS PROJECT

INSTRUMENTATION AND CONTROL
SOUTH SCREENINGS – OPTION A
PROCESS AND INSTRUMENTATION DIAGRAM

SCALE NTS

DRAWING No. 806

SHEET No.

I–04A

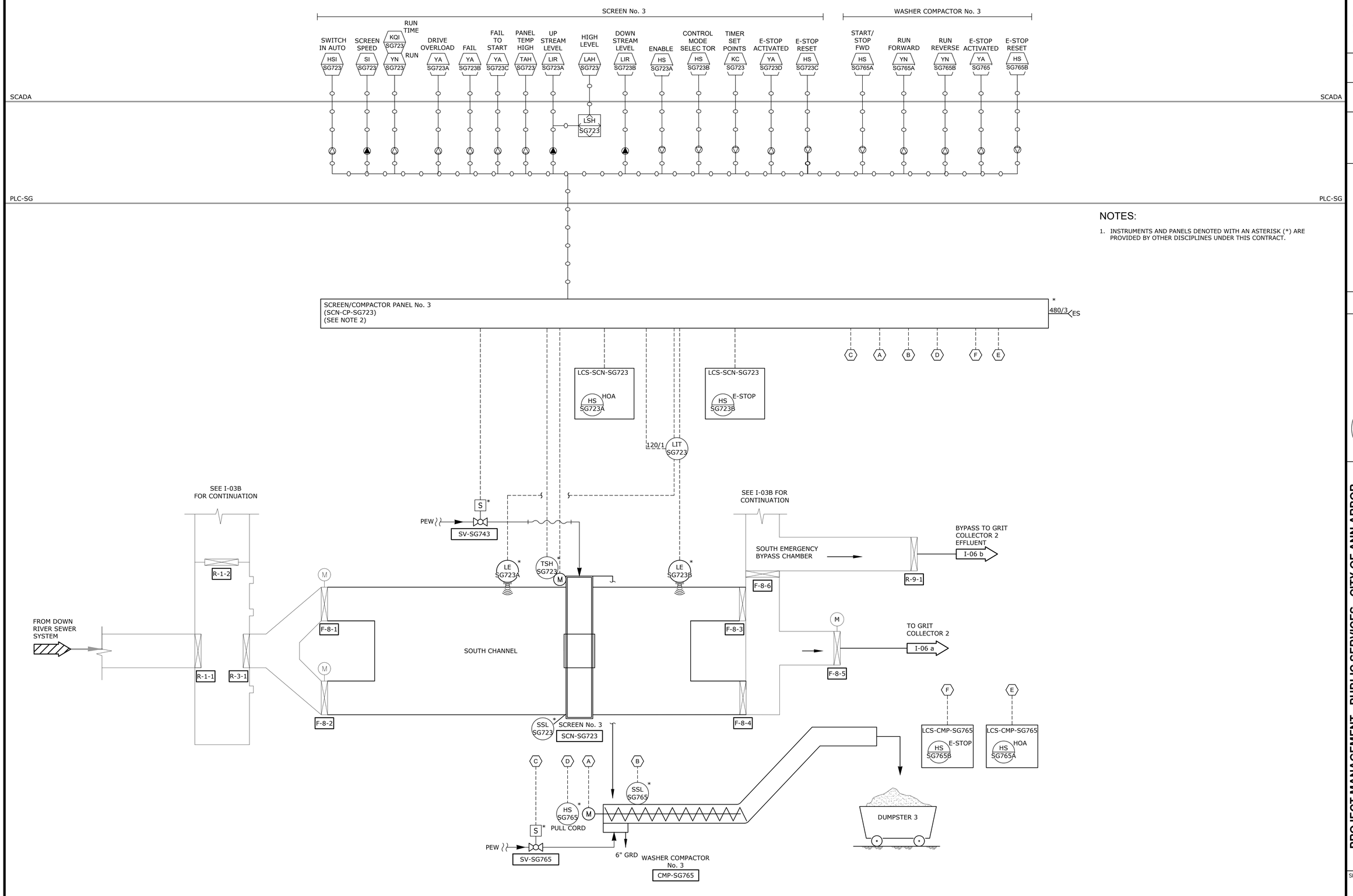

NOTES:

1. INSTRUMENTS AND PANELS DENOTED WITH AN ASTERISK (*) ARE PROVIDED BY OTHER DISCIPLINES UNDER THIS CONTRACT.

811 Know what's below. Call before you dig.

REV.	DESCRIPTION	DATE	DRAWN	CHECKED
	ISSUED FOR BIDS SET	12-13-2021		
	90% DESIGN SUBMITTAL	11-22-2021		
	70% DESIGN SUBMITTAL	10-29-2021		
	50% DESIGN SUBMITTAL	10-01-2021		

CITY OF ANN ARBOR
PUBLIC SERVICES
301 EAST HURON STREET
P.O. BOX 8647
ANN ARBOR, MI 48107-8647
734-794-6410
www.a2gov.org

PROJECT MANAGEMENT - PUBLIC SERVICES - CITY OF ANN ARBOR

HEADWORKS IMPROVEMENTS PROJECT

INSTRUMENTATION AND CONTROL
SOUTH SCREENINGS – OPTION B
PROCESS AND INSTRUMENTATION DIAGRAM

SCALE NTS

DRAWING No. 807

SHEET No.
I-04B

GRIT COLLECTOR No. 1

ZERO SPEED YA SG812A
SWITCH IN AUTO HSI SG812
START/ STOP HS SG812A
KQI SG812 RUN TIME
YN SG812 RUN
FAULT YA SG812B
OVERLOAD YA SG812C
MOTOR HIGH TEMP YA SG812D
E-STOP ACTIVATED YA SG812E
E-STOP RESET HS SG812B

GRIT PUMP No. 1
(TYP. OF 2) (SEE NOTE 2)

SWITCH IN REMOTE HSI SG851
START/ STOP HS SG851A
KQI SG851 RUN TIME
YN SG851 RUNNING
OVERLOAD YA SG8521A
FAIL YA SG851B
MOTOR HIGH TEMP YA SG851C
E-STOP ACTIVATED YA SG851D
E-STOP RESET HS SG851B

SCADA

PLC-SG

NOTES:

1. INSTRUMENTS AND PANELS DENOTED WITH AN ASTERISK (*) ARE PROVIDED BY BY OTHER DISCIPLINES UNDER THIS CONTRACT.
2. FOR CLARITY, INSTRUMENTS, INTERCONNECTING WIRING AND MONITORING AND CONTROL IS SHOWN FOR GRIT PUMP No. 1 (P-SG851) ONLY, THE SAME SHALL BE PROVIDED FOR GRIT PUMP No. 2 (P-SG852).
3. SEE SHEET P-06 FOR ADDITIONAL DETAILS.

GRIT REMOVAL SYSTEM No. 1
CONTROL PANEL
(GR-CP-SG812) *
ES 480/3

FROM NORTH EMERGENCY BYPASS CHANNEL
I-03 b

LCS-GC-SG812 HOA HS SG812A
LCS-GC-SG812 E-STOP HS SG812B
LCS-P-SG851 E-STOP HS SG851

FROM NORTH CHANNEL SCREENS
I-03 a

M
F-3-1
GRIT COLLECTOR No. 1 INFLUENT GATE

SETTLING PLATES

S-7-1
S-6-2
TO INFLUENT FLOW SPLITTER

EFFLUENT TROUGH (TYP. OF 3)

SSL SG812 *
GRIT AUGER
TSH SG812 *
GRIT COLLECTOR No. 1
GC-SG812

NORTH CHAMBER GRIT COLLECTOR No. 1
GC-SG812

PI SG851A
MSH SG851 *
TSH SG851 *
PSH SG851
PI SG851B
4"
4" GR
PEW
2"
SV-SG854
S *
GRIT PUMP No. 1
P-SG851
FICV SG851 *
SV-SG851
SEAL WATER PANEL 1
(SEE NOTE 3)

PI SG852A
MSH SG852 *
TSH SG852 *
PSH SG852
PI SG852B
SV-SG855
GRIT PUMP No. 2
P-SG852
FICV SG852 *
SV-SG852
SEAL WATER PANEL 2
(SEE NOTE 3)

TO GRIT WASHER NO. 1
I-07

811 Know what's below. Call before you dig.

REV.	DESCRIPTION	DATE	DRAWN	CHECKED
	ISSUED FOR BIDS SET	12-13-2021		
	90% DESIGN SUBMITTAL	11-22-2021		
	70% DESIGN SUBMITTAL	10-29-2021		
	50% DESIGN SUBMITTAL	10-01-2021		

CITY OF ANN ARBOR
PUBLIC SERVICES
301 EAST HURON STREET
P.O. BOX 8647
ANN ARBOR, MI 48107-8647
734-794-6410
www.a2gov.org

PROJECT MANAGEMENT - PUBLIC SERVICES - CITY OF ANN ARBOR

HEADWORKS IMPROVEMENTS PROJECT

INSTRUMENTATION AND CONTROL
NORTH GRIT COLECTOR
PROCESS AND INSTRUMENTATION DIAGRAM

SCALE NTS
DRAWING No. 808

SHEET No.
I-05

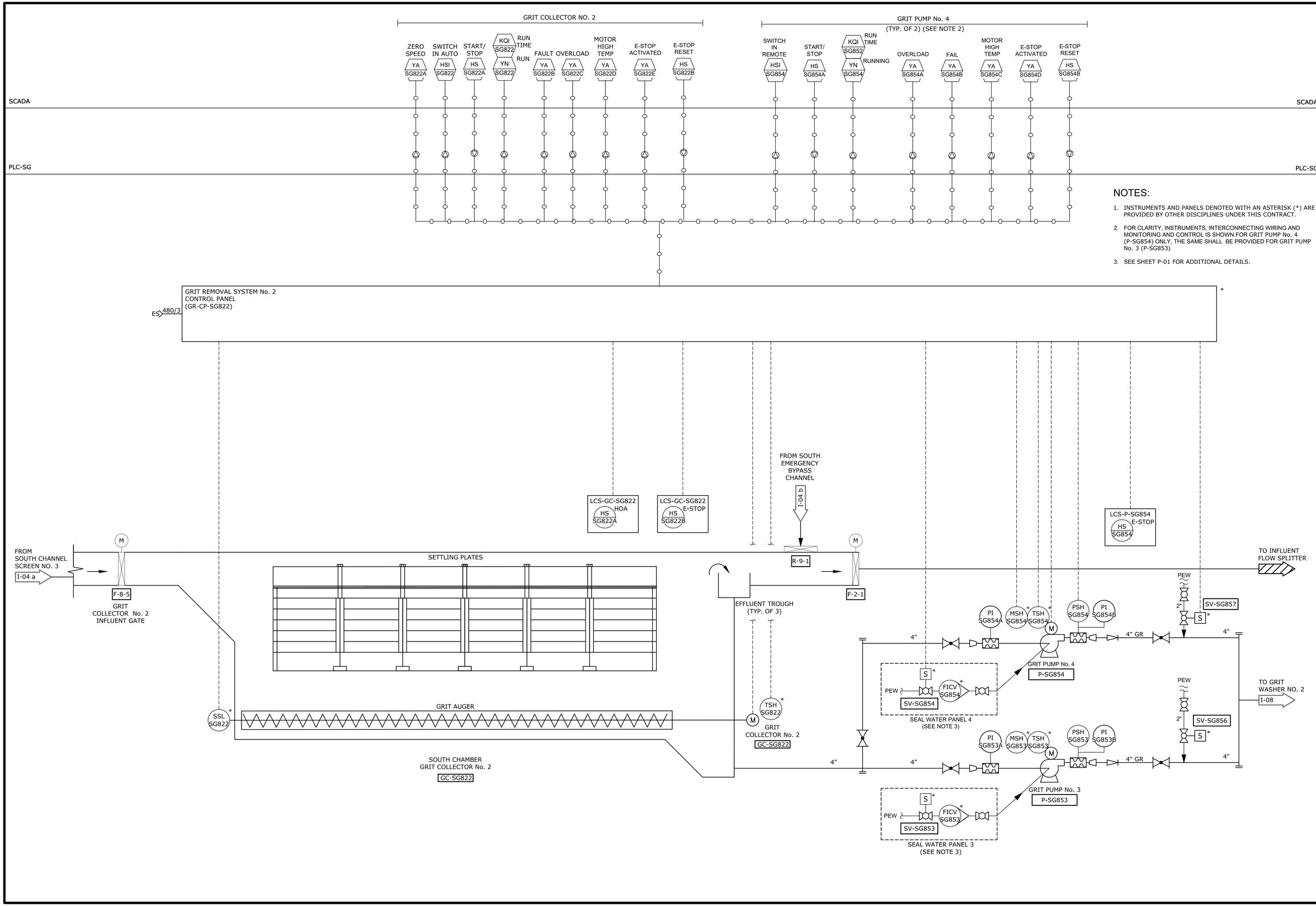

NOTES:

1. INSTRUMENTS AND PANELS DENOTED WITH AN ASTERISK (*) ARE PROVIDED BY OTHER DISCIPLINES UNDER THIS CONTRACT.
2. FOR CLARITY, INSTRUMENTS, INTERCONNECTING WIRING AND MONITORING AND CONTROL IS SHOWN FOR GRIT PUMP No. 4 (P-SG854) ONLY, THE SAME SHALL BE PROVIDED FOR GRIT PUMP No. 3 (P-SG853).
3. SEE SHEET P-01 FOR ADDITIONAL DETAILS.

811 Know what's below. Call before you dig.

REV.	DESCRIPTION	DATE	DRAWN	CHECKED
	ISSUED FOR BIDS SET	12-13-2021		
	90% DESIGN SUBMITTAL	11-22-2021		
	70% DESIGN SUBMITTAL	10-29-2021		
	50% DESIGN SUBMITTAL	10-01-2021		

CITY OF ANN ARBOR
PUBLIC SERVICES
301 EAST HURON STREET
P.O. BOX 8647
ANN ARBOR, MI 48107-8647
734-794-6410
www.a2gov.org

PROJECT MANAGEMENT - PUBLIC SERVICES - CITY OF ANN ARBOR

HEADWORKS IMPROVEMENTS PROJECT

INSTRUMENTATION AND CONTROL
SOUTH GRIT COLLECTOR
PROCESS AND INSTRUMENTATION DIAGRAM

SCALE NTS
DRAWING No. 810

SHEET No. I-06

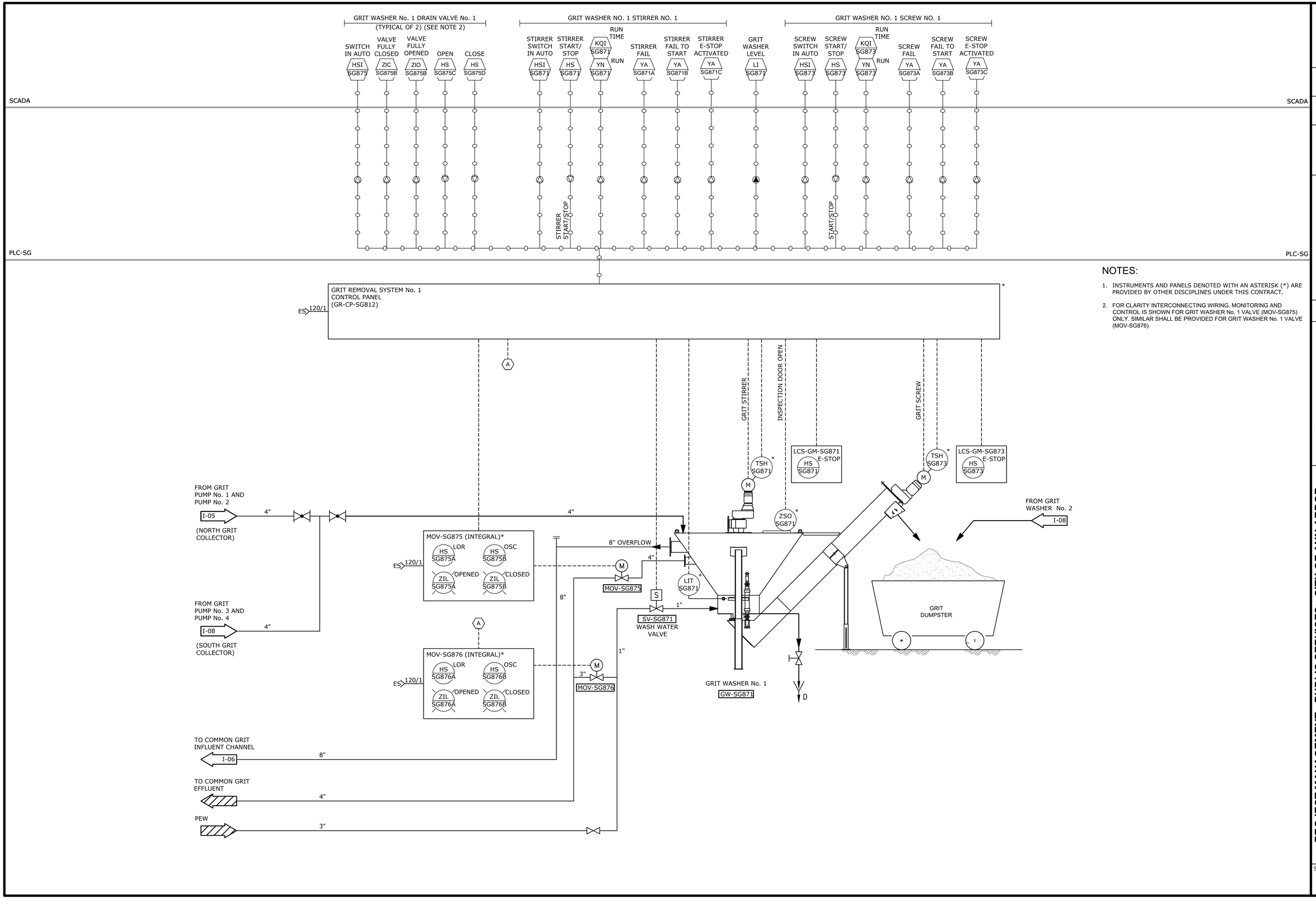

NOTES:

1. INSTRUMENTS AND PANELS DENOTED WITH AN ASTERISK (*) ARE PROVIDED BY OTHER DISCIPLINES UNDER THIS CONTRACT.
2. FOR CLARITY INTERCONNECTING WIRING, MONITORING AND CONTROL IS SHOWN FOR GRIT WASHER No. 1 VALVE (MOV-SG875) ONLY. SIMILAR SHALL BE PROVIDED FOR GRIT WASHER No. 1 VALVE (MOV-SG876).

Know what's below. Call before you dig. 811

REV.	DESCRIPTION	DATE	DRAWN	CHECKED
	ISSUED FOR BIDS SET	12-13-2021		
	90% DESIGN SUBMITTAL	11-22-2021		
	70% DESIGN SUBMITTAL	10-29-2021		
	50% DESIGN SUBMITTAL	10-01-2021		

CITY OF ANN ARBOR
PUBLIC SERVICES
301 EAST HURON STREET
P.O. BOX 8647
ANN ARBOR, MI 48107-8647
734-794-6410
www.a2gov.org

PROJECT MANAGEMENT - PUBLIC SERVICES - CITY OF ANN ARBOR

HEADWORKS IMPROVEMENTS PROJECT

INSTRUMENTATION AND CONTROL
NORTH GRIT WASHER
PROCESS AND INSTRUMENTATION DIAGRAM

SCALE NTS

DRAWING No. 812

SHEET No. I–07

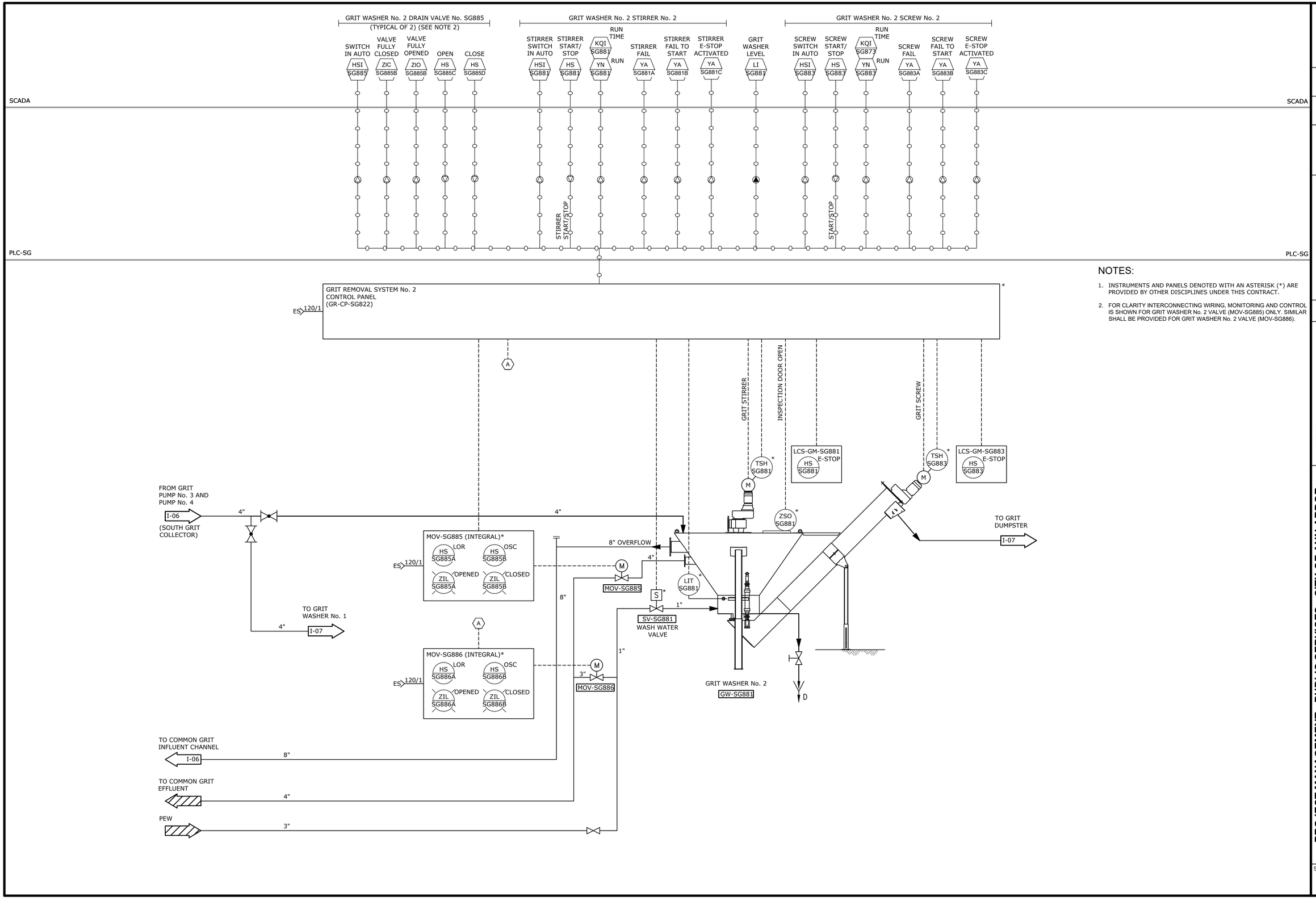

NOTES:

1. INSTRUMENTS AND PANELS DENOTED WITH AN ASTERISK (*) ARE PROVIDED BY OTHER DISCIPLINES UNDER THIS CONTRACT.
2. FOR CLARITY INTERCONNECTING WIRING, MONITORING AND CONTROL IS SHOWN FOR GRIT WASHER No. 2 VALVE (MOV-SG885) ONLY. SIMILAR SHALL BE PROVIDED FOR GRIT WASHER No. 2 VALVE (MOV-SG886).

811 Know what's below. Call before you dig.

REV.	DESCRIPTION	DATE	DRAWN	CHECKED
	ISSUED FOR BIDS SET	12-13-2021		
	90% DESIGN SUBMITTAL	11-22-2021		
	70% DESIGN SUBMITTAL	10-29-2021		
	50% DESIGN SUBMITTAL	10-01-2021		

CITY OF ANN ARBOR
PUBLIC SERVICES
301 EAST HURON STREET
P.O. BOX 8647
ANN ARBOR, MI 48107-8647
734-794-6410
www.a2gov.org

PROJECT MANAGEMENT - PUBLIC SERVICES - CITY OF ANN ARBOR

HEADWORKS IMPROVEMENTS PROJECT

INSTRUMENTATION AND CONTROL
SOUTH GRIT WASHER
PROCESS AND INSTRUMENTATION DIAGRAM

SCALE NTS

DRAWING No. 814

SHEET No. I-08

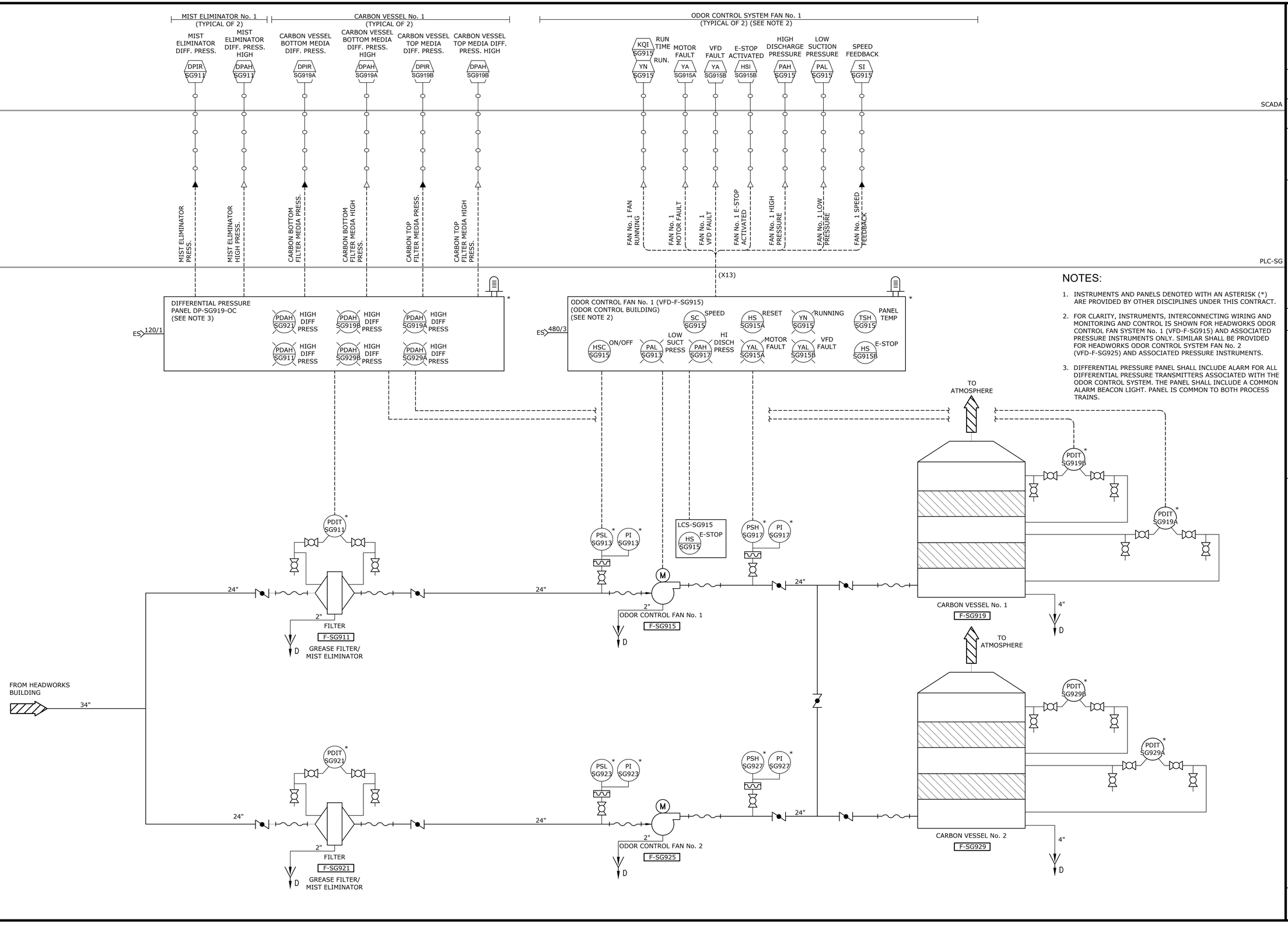

NOTES:

1. INSTRUMENTS AND PANELS DENOTED WITH AN ASTERISK (*) ARE PROVIDED BY OTHER DISCIPLINES UNDER THIS CONTRACT.
2. FOR CLARITY, INSTRUMENTS, INTERCONNECTING WIRING AND MONITORING AND CONTROL IS SHOWN FOR HEADWORKS ODOR CONTROL FAN SYSTEM No. 1 (VFD-F-SG915) AND ASSOCIATED PRESSURE INSTRUMENTS ONLY. SIMILAR SHALL BE PROVIDED FOR HEADWORKS ODOR CONTROL SYSTEM FAN No. 2 (VFD-F-SG925) AND ASSOCIATED PRESSURE INSTRUMENTS.
3. DIFFERENTIAL PRESSURE PANEL SHALL INCLUDE ALARM FOR ALL DIFFERENTIAL PRESSURE TRANSMITTERS ASSOCIATED WITH THE ODOR CONTROL SYSTEM. THE PANEL SHALL INCLUDE A COMMON ALARM BEACON LIGHT. PANEL IS COMMON TO BOTH PROCESS TRAINS.

Know what's below. Call before you dig. 811

REV.	DESCRIPTION	DATE	DRAWN	CHECKED
	ISSUED FOR BIDS SET	12-13-2021		
	90% DESIGN SUBMITTAL	11-22-2021		
	70% DESIGN SUBMITTAL	10-29-2021		
	50% DESIGN SUBMITTAL	10-01-2021		

CITY OF ANN ARBOR
PUBLIC SERVICES
301 EAST HURON STREET
P.O. BOX 8647
ANN ARBOR, MI 48107-8647
734-794-6410
www.a2gov.org

PROJECT MANAGEMENT - PUBLIC SERVICES - CITY OF ANN ARBOR

HEADWORKS IMPROVEMENTS PROJECT

INSTRUMENTATION AND CONTROL
ODOR CONTROL SYSTEM
PROCESS AND INSTRUMENTATION DIAGRAM

SCALE NTS

DRAWING No. 816

SHEET No. I-09

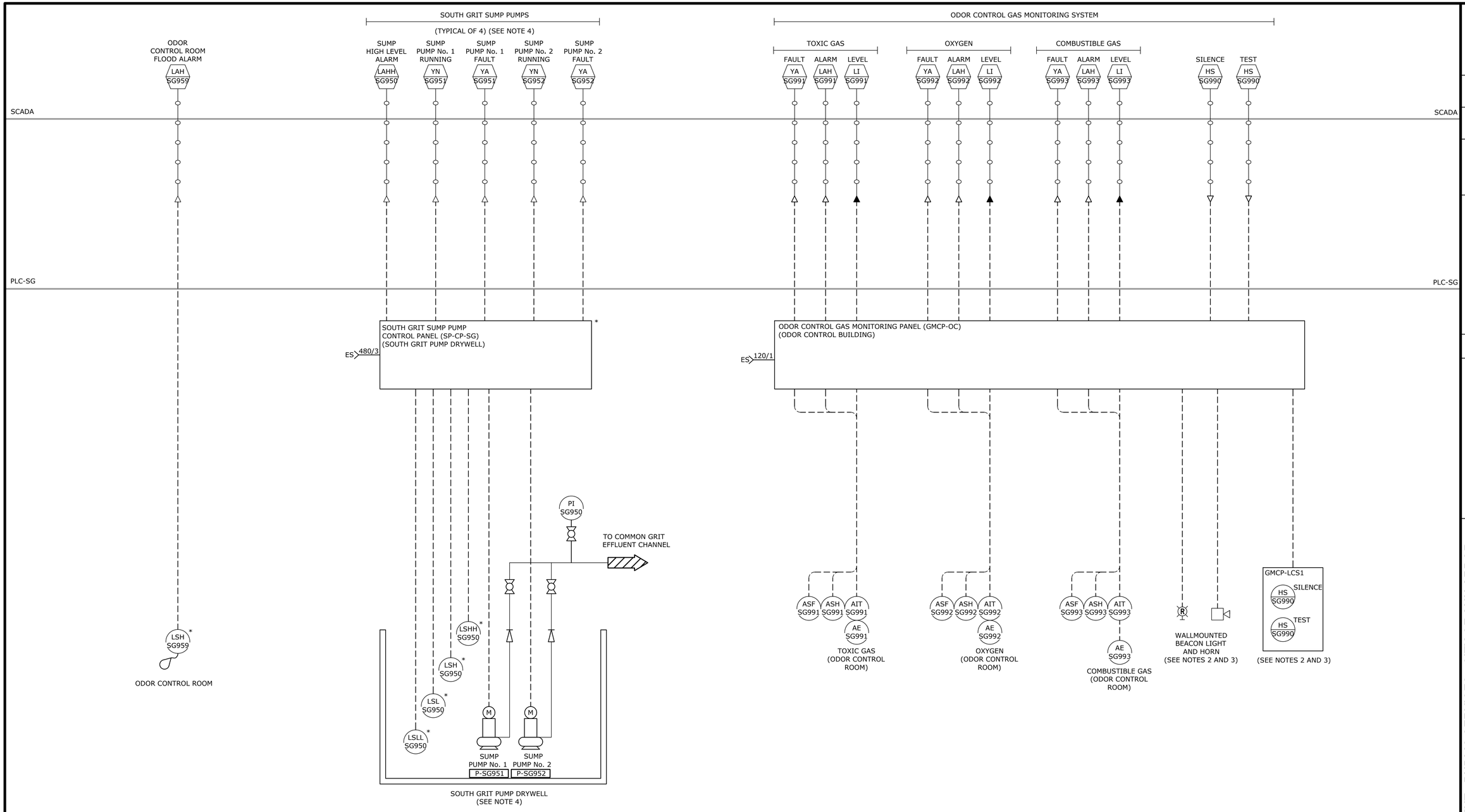

SUMP PUMP STATIONS	SOUTH GRIT PUMP DRYWELL	NORTH GRIT AUGER DRYWELL	NORTH DUMPSTER ROOM	LOWER ALCOVE AREA	SOUTH GARAGE
PUMP No. 1	P-SG951	P-SG961	P-SG971	P-SG981	P-SG991
PUMP No. 2	P-SG952	P-SG962	P-SG972	P-SG982	P-SG992
CONTROL PANEL	SP-CP-SG	SP-CP-NG	SP-CP-ND	SP-CP-LA	SP-CP-SGA
LEVEL SWITCHES					
LEVEL	LSHH-SG950	LSHH-SG960	LSHH-SG970	LSHH-SG980	LSHH-SG990
LEVEL	LSH-SG950	LSH-SG960	LSH-SG970	LSH-SG980	LSH-SG90
LEVEL	LSL-SG950	LSL-SG960	LSL-SG970	LSL-SG980	LSL-SG990

NOTES:

1. INSTRUMENTS AND PANELS DENOTED WITH AN ASTERISK (*) ARE PROVIDED BY OTHER DISCIPLINES UNDER THIS CONTRACT.
2. QUANTITIES AND LOCATION SHALL BE PER ELECTRICAL DRAWINGS. NEAR THE EAST AND WEST WALL ENTRANCE DOORS. ADD A LETTER SUFFIX AFTER THE LOOP NUMBER FOR EACH LOCAL CONTROL STATION (SG990A, SG990B, ETC.).
3. PLACE RED NAME PLATE WITH 1" HIGH LETTERS READING "DANGER GAS DETECTED DO NOT ENTER" ADJACENT TO EACH STROBE AT BUILDING ENTRANCES.
4. FOR CLARITY, EQUIPMENT, PANELS, INTERCONNECTING WIRING AND MONITORING AND CONTROL IS SHOWN FOR SOUTH GRIT PUMP DRYWELL SUMP PUMPS (P-SG951 AND P-SG952) ONLY. SEE TABLE FOR OTHER TYPICAL SUMP PUMP LOOP NUMBERS.

811 Know what's below. Call before you dig.

REV.	DESCRIPTION	DATE	DRAWN	CHECKED
	50% DESIGN SUBMITTAL	10-01-2021		
	70% DESIGN SUBMITTAL	10-29-2021		
	90% DESIGN SUBMITTAL	11-22-2021		
	ISSUED FOR BIDS SET	12-13-2021		

CITY OF ANN ARBOR
PUBLIC SERVICES
301 EAST HURON STREET
P.O. BOX 8647
ANN ARBOR, MI 48107-8647
734-794-6410
www.a2gov.org

PROJECT MANAGEMENT - PUBLIC SERVICES - CITY OF ANN ARBOR

HEADWORKS IMPROVEMENTS PROJECT

INSTRUMENTATION AND CONTROL
ODOR CONTROL SYSTEM GAS MONITORING
PROCESS AND INSTRUMENTATION DIAGRAM

SCALE NTS

DRAWING No. 818

SHEET No. I–10

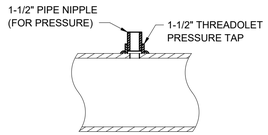

PRESSURE TAP
USED FOR PIPES 2" AND GREATER

1765001

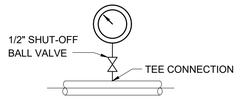

PRESSURE GAUGE OR SWITCH
INSTALLATION WITH TEE CONNECTION
(SHOWN W/O DIAPHRAGM SEAL)
USED FOR PIPES UNDER 2"

1765003

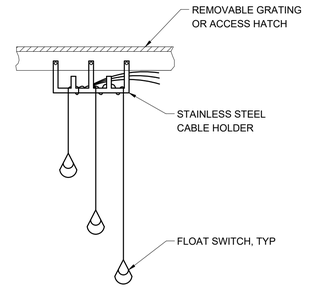

WEIGHTED LEVEL SWITCH
MOUNTING DETAILS

1767005

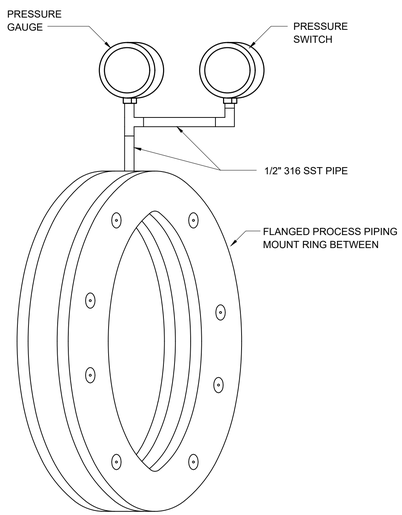

IN-LINE ISOLATING RING DETAIL
FOR HEAVY SOLIDS/SLURRY SERVICE

1769801

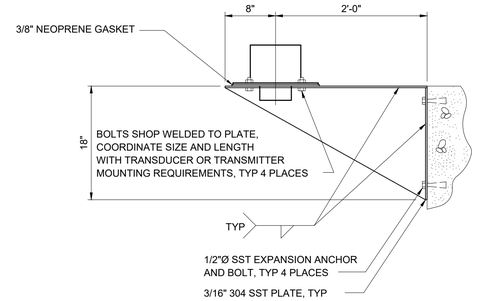

SECTION

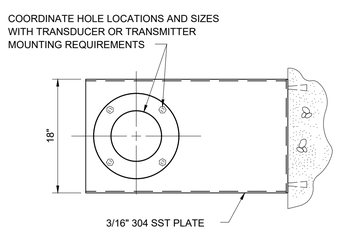

PLAN VIEW

ULTRASONIC LEVEL TRANSDUCER
WALL MOUNTING DETAIL

1774002

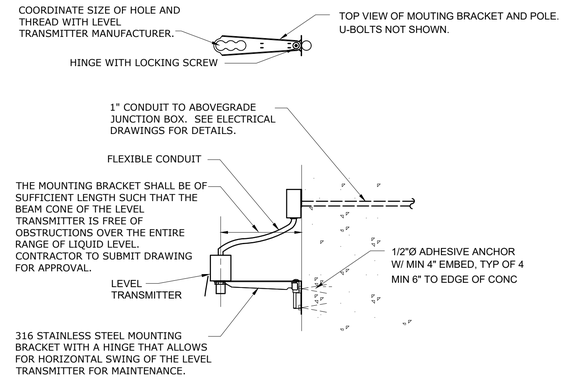

NON-CONTACT ULTRASONIC LEVEL TRANSMITTER
WALL MOUNTING DETAIL

1774007

811 Know what's **below.** **Call** before you dig.

REV.	DESCRIPTION	DATE	DRAWN	CHECKED
	ISSUED FOR BIDS SET	12-13-2021		
	90% DESIGN SUBMITTAL	11-22-2021		
	70% DESIGN SUBMITTAL	10-29-2021		
	50% DESIGN SUBMITTAL	10-01-2021		

CITY OF ANN ARBOR
PUBLIC SERVICES
301 EAST HURON STREET
P.O. BOX 8647
ANN ARBOR, MI 48107-8647
734-794-6410
www.a2gov.org

PROJECT MANAGEMENT - PUBLIC SERVICES - CITY OF ANN ARBOR

HEADWORKS IMPROVEMENTS PROJECT

INSTRUMENTATION AND CONTROL
STANDARD DETAILS

SCALE NTS

DRAWING No. 820

SHEET No. I-11